SHEET INDEX

INDEX:

G-001	COVER SHEET
G-002	GENERAL NOTES
G-100	LIFE SAFETY PLANS AND CODE ANALYSIS
G-101	LIFE SAFETY PLAN

CIVIL:

C0	TOPOGRAPHY
C1	SITE PLAN
C2	DEMOLITION PLAN
C3	GRADING PLAN
C4	PAVING DETAILS
C5	DIMENSION PLAN
C6	SITE UTILITY PLAN
C7	UTILITY DETAILS

STRUCTURE:

S-101	GENERAL NOTES
S-102	SPECIAL INSTRUCTIONS
S-201	FOUNDATION PLAN
S-301	FOUNDATION DETAILS
S-302	FOUNDATION DETAILS
S-401	ROOF FRAMING PLAN
S-402	STAIR & MEZZ. FRAMING PLAN
S-501	FRAMING DETAILS
S-502	FRAMING DETAILS

ARCHITECTURE:

AD-101	DEMO FLOOR PLAN
AD-201	DEMOLITION ELEVATIONS
A-001	SITE PLAN
A-101	MAIN LEVEL FLOOR PLAN
A-102	SECOND FLOOR PLAN
A-111	CEILING PLANS
A-121	ROOF PLAN
A-201	ELEVATIONS
A-301	BUILDING SECTION
A-311	WALL SECTIONS
A-312	WALL SECTIONS
A-313	WALL SECTIONS
A-314	WALL SECTIONS
A-321	WALL TYPES
A-401	ENLARGED FLOOR PLANS
A-411	STAIR SECTIONS
A-412	STAIR SECTIONS
A-501	PLAN DETAILS
A-502	PLAN DETAILS
A-511	VERTICAL DETAILS
A-512	VERTICAL DETAILS
A-601	DOOR SCHEDULE
A-602	DOOR JAMB/HEADER DETAILS
A-603	DOOR JAMB/HEADER DETAILS
A-701	FINISH FLOOR PLAN
A-710	FINISH & COLOR SCHEDULES
A-741	INTERIOR ELEVATIONS
A-742	INTERIOR ELEVATIONS
A-750	MILLWORK DETAILS

PLUMBING:

P-001	PLUMBING GENERAL
P-111	FIRST FLOOR PLUMBING DEMOLITION PLAN
P-200	UNDERFLOOR PLUMBING PLAN
P-211	FIRST FLOOR PLUMBING PLAN
P-221	SECOND FLOOR PLUMBING PLAN
P-501	PLUMBING SCHEDULES
P-601	PLUMBING DETAILS
P-602	PLUMBING DETAILS
P-603	PLUMBING DETAILS
P-701	WASTE & VENT RISER DIAGRAM
P-702	DOMESTIC RISER DIAGRAM

MECHANICAL:

M-001	HVAC GENERAL
M-101	FIRST FLOOR MECHANICAL DEMOLITION PLAN
M-211	FIRST FLOOR HVAC PLAN
M-221	SECOND FLOOR HVAC PLAN
M-501	HVAC SCHEDULES
M-601	HVAC DETAILS
M-602	HVAC DETAILS
M-603	HVAC DETAILS
M-604	HVAC DETAILS

ELECTRICAL:

E-001	GENERAL ELECTRIC
E-111	FIRST FLOOR ELECTRICAL DEMOLITION PLAN
EL-211	FIRST FLOOR LIGHTING PLAN
EP-211	FIRST FLOOR POWER PLAN
E-501	ELECTRICAL SCHEDULES
E-601	ELECTRICAL DETAILS

VICINITY MAP



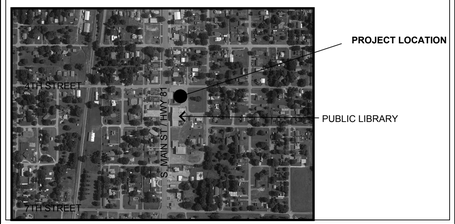

KEY PLAN

ALTERNATES

1. DEMO EXISTING METAL WALL PANELS, REPLACE WITH NEW METAL WALL PANELS ON EAST SIDE. DEMO METAL ROOF AND GUTTER/DOWNSPOUTS EAST SIDE, REPLACE WITH NEW METAL ROOF PANELS, GUTTERS AND DOWNSPOUTS EAST SIDE.
2. ADD BRICK LEDGE TO EXISTING EAST SIDE.
3. ADD BRICK TO REMAINING BUILDING. PORTIONS OF NORTH AND SOUTH ELEVATIONS AND ALL OF EAST SIDE.

PROJECT PROFESSIONAL COMPANIES

ARCHITECT:

ARCHITECTS IN PARTNERSHIP, LLC
3220 MARSHALL AVE.
NORMAN, OK 73072

CIVIL ENGINEERING CONSULTANTS:

FOX ENGINEERING
CIVIL ENGINEERS

Fox Engineering, Inc.
211 E. Street N.W., PO BOX 666
Ardmore, Oklahoma 73401
Phone: 405-223-2319
www.foxengineeringok.com

STRUCTURAL ENGINEERING CONSULTANTS:

Engineering Solutions, LLC.
6801 North Broadway, Suite 215
Oklahoma City, Oklahoma 73116
Phone: 405-848-4093
www.engineeringsolutionsllc.net

SPECIALTY CONSULTANTS:

MECHANICAL/ELECTRICAL/PLUMBING ENGINEERING CONSULTANTS:

MOXIFY
ENGINEERING & COMMISSIONING

Moxify Engineering, LLC.
4334 NW Expressway, Suite 156
Oklahoma City, Oklahoma 73116
Phone: 405-254-5038
www.moxifyengineering.com

CONSTRUCTION MANAGER:

ARCHITECTS IN PARTNERSHIP

ARCHITECTS
INTERIOR DESIGNERS
PLANNERS

3220 MARSHALL AVENUE
NORMAN, OK 73072
TEL: 405.360.1300
FAX: 405.360.1431

SEAL:

STATE OF OKLAHOMA
GANG
4780
LICENSED ARCHITECT

08/08/2022

HENNESSEY FIRE DEPARTMENT

REMODEL/ADDITION

501 S. MAIN STREET

HENNESSEY, OKLAHOMA

REVISIONS

REV.	DATE	DESCRIPTION

PROJ. MANAGER: GL
DRAWN BY: STAFF
CHECKED BY: GL

DATE: 08/08/2022
PROJECT NO.: 2111

SHEET TITLE: COVER SHEET
SHEET NO.: G-001

HENNESSEY FIRE DEPARTMENT

REMODEL/ADDITION

Hennessey Oklahoma

LIST OF ABBREVIATIONS

AB	ANCHOR BOLT
ACOUS	ACOUSTICAL
ACM	ALUMINUM COMPOSITE MATERIAL
ACT	ACOUSTICAL CEILING TILE
AD	AREA DRAIN
ADD'L	ADDITIONAL
ADJ	ADJUSTABLE
ADMIN	ADMINISTRATION
AEWC	ACCESSIBLE EWC
AFF	ABOVE FINISHED FLOOR
ALUM/AL	ALUMINUM
ALT	ALTERNATE
ANCIL	ANCILLARY
ANOD/AN	ANODIZED
APPROX	APPROXIMATE(LY)
ARCH	ARCHITECT(URAL)
AWI	ARCH'TL WOODWORK INSTITUTE
AWV	AIR WATER VAPOR BARRIER
BD	BOARD
BFF	BELOW FINISHED FLOOR
BLDG	BUILDING
BLK	BLOCK
BLK'G	BLOCKING
BM	BEAM
B.O.	BOTTOM OF
BRG	BEARING
BRK	BRICK
B.S	BOTH SIDES
CAB	CABINETS
CF/CI	CONTRACTOR FURNISHED, CONTRACTOR INSTALLED
CFMF	COLD FORMED METAL FRAMING
CL	CENTERLINE
CLR	CLEAR
CJ	CONTROL JOINT
CLG	CEILING
CLO	CLOSET
CMU	CONCRETE MASONRY UNIT
CO	CLEAN OUT
COL	COLUMN
COMP	COMPOSITE, COMPOSITION
CONC	CONCRETE
CONF	CONFERENCE
CONST	CONSTRUCTION
CONT	CONTINUOUS
COR	COLOR
CORR	CORRIDOR
CPT	CARPET
CR	COLD ROLLED
CRS	COURSE
CT	CERAMIC TILE
CTR	CENTER
CTSK	COUNTERSINK
CU.FT	CUBIC FOOT
CU.YD	CUBIC YARD
DBL	DOUBLE
DEG	DEGREE
DEMO	DEMOLISH/DEMOLITION
DEPT	DEPARTMENT
DF	DRINKING FOUNTAIN
DET	DETAIL
DIA	DIAMETER
DIM/DIM'S	DIMENSION(S)
DISP	DISPENSER
DIV	DIVISION
DN	DOWN
DR	DOOR
DS	DOWNSPOUT
DWR	DRAWER
DWG/DWG'S	DRAWING/DRAWINGS
E	EAST
EA	EACH
E.I.F.S. or EFIS	EXTERIOR INSULATION FINISH SYSTEM
EJ	EXPANSION JOINT
EL or ELEV	ELEVATION
ELEC	ELECTRICAL
ELEVR	ELEVATOR
EMER	EMERGENCY
ENCL	ENCLOSURE
ENGR	ENGINEER
EQ	EQUAL
EQUIP	EQUIPMENT
EWC	ELECTRIC WATERCOOLER
EXIST/EXG	EXISTING
EXP	EXPANSION
EXPO	EXPOSED
EXT	EXTERIOR
FA	FIRE ALARM
FCU	FAN COIL UNIT
FD	FLOOR DRAIN
FDN	FOUNDATION
FF	FINISHED FLOOR
FE	FIRE EXTINGUISHER
FEB	FIRE EXTINGUISHER BRACKET
FEC	FIRE EXTINGUISHER CABINET
FF&E	FURNITURE, FIXTURES & EQUIPMENT
FIN	FINISH
FLEX	FLEXIBLE
FLR	FLOOR
FLASH or FLG	FLASHING
FR	FIRE RATED
FRM	FRAME
FRT	FIRE RETARDANT TREATED
FT	FOOT or FEET
FTG	FOOTING
FURN	FURNISHED
FURR'G	FURRING
FV	FIELD VERIFY
GA	GAUGE
GALV	GALVANIZED
GB	GRAB BAR
GEN	GENERAL
GI	GALVANIZED IRON
G.L.	GLOSS LEVEL
GLAZ	GLAZING
GND	ELECTRICAL GROUND
GR	GRADE
GWB or GYP BD.	GYPSUM BOARD
GYP	GYPSUM
HC	HOLLOW CORE or HANDICAP ACCESSIBLE
HDW	HARDWARE
HDWD	HARDWOOD
HM	HOLLOW METAL
HORIZ	HORIZONTAL
HR	HOUR
HT	HEIGHT
HVAC	HEATING-VENTILATION-AIR CONDITIONING
HW	HOT WATER HEATER
I.D.	INSIDE DIAMETER
IN	INCHES
INSUL/INS	INSULATION, INSULATED
INT	INTERIOR
JAN	JANITOR
JST	JOIST
JT	JOINT
KIT	KITCHEN
K.D.	KNOCKDOWN
LAB	LABORATORY
LAM	LAMINATED
LAV	LAVATORY
LED	LIGHT-EMITTING DIODE
LF	LIGHT FIXTURE
LT	LIGHT
MACH	MACHINE
MAX	MAXIMUM
MECH	MECHANICAL
MED	MEDICINE
MEMB	MEMBRANE
MFR	MANUFACTURER
MGR	MANAGER
M.H.	MANHOLE
MIC. OV	MICROWAVE OVEN
MIN	MINIMUM
MIR or M	MIRROR
MISC	MISCELLANEOUS
M.O.	MASONRY OPENING
MR	MOP RACK
M.R.G.B	MOISTURE RESISTANT GYPSUM BOARD
MS	MOP SINK
MTD	MOUNTED
MTL	METAL
MW	BUILT-IN MILLWORK
N	NORTH
N.I.C	NOT IN CONTRACT
NO.(#)	NUMBER
NOM.	NOMINAL
N.T.S	NOT TO SCALE
O.A	OVERALL
OC/oc	ON CENTER
O.C.E.W	ON CENTER EACH WAY
OD	OUTSIDE DIAMETER
OFCI	OWNER FURNISHED/CONTR. INSTALLED
OFF	OFFICE
OF/OI	OWNER FURNISHED/OWNER INSTALLED
O.H	OPPOSITE HAND
OPER	OPERABLE
OPNG	OPENING
OPP	OPPOSITE
OSB	ORIENTED STRAND BOARD
O.T.O	OUTSIDE TO OUTSIDE
PC	PORTLAND CEMENT
PH	PHONE (TELEPHONE)
PL	PLATE
PLAM	PLASTIC LAMINATE
PLAS	PLASTER
PLYWD	PLYWOOD
PPT	PRESERVATIVE PRESSURE TREATED
PR	PAIR
PREP	PREPARATION
PT	PAINT
P.T.D	PAPER TOWEL DISPENSER
PTN	PARTITION
P.T.D/R	COMBINATION PAPER TOWEL DISPENSER/RECEPTACLE
Q.T	QUARRY TILE
R or RAD	RADIUS
RCP	REFLECTED CEILING PLAN
R.D.	ROOF DRAIN
RE: or REF	REFERENCE
REC'P	RECEPTION
REFR	REFRIDGERATOR
REINF	REINFORCED
RESIL	RESILIENT
RESIST	RESISTANT
REQ or REQ'D	REQUIRED
RET	RETAINING
REV	REVISION
R.F.S	ROOM FINISH SCHEDULE
R.J.	RUSTICATION JOINT
RM	ROOM
RO	ROUGH OPENING
R&S	ROD AND SHELF
RTU	ROOF TOP UNIT (HVAC)
RWC	RAIN WATER CONDUCTOR
S	SOUTH
S.B.	SMART BOARD
SCHED/SCH	SCHEDULE
SCWD	SOLID CORE WOOD DOOR
SD	SOAP DISPENSER
SECT	SECTION
SEC'Y	SECRETARY
SH	SHELF
SHWR	SHOWER
SHT	SHEET
SHTH'G	SHEATHING
SIM	SIMILAR
S.N.D	SANITARY NAPKIN DISPENSER
S.N.R	SANITARY NAPKIN RECEPTACLE
SQ	SQUARE
SS	SANITARY SEWER
S.S.	STAINLESS STEEL
STA	STATION
STD	STANDARD
STL	STEEL
STN	STAIN
STOR	STORAGE
STR or STRUCT	STRUCTURAL
SUSP	SUSPEND(ED)
S&V	STAIN & VARNISH
SYM	SYMMETRICAL
T	TOILET
T.B.	TACK BOARD
T.C.	TOP OF CURB
TEMP	TEMPERED/ TEMPORARY
TER	TERRAZZO
TG	TOP OF GRATE
T&G	TOUNGE AND GROOVE
THK	THICK(NESS)
TLWC	TOP OF LIGHTWEIGHT CONCRETE
T.O.	TOP OF
T.O.M.	TOP OF MASONRY
T.O.S.	TOP OF STEEL
T.O.W/T.W.	TOP OF WALL
T.P.	TOP OF PAVEMENT
T.P.D.	TOILET PAPER DISPENSER
TV	TELEVISION
TYP	TYPICAL
UL	UNDERWRITERS LABORATORIES
U.N.O	UNLESS OTHERWISE NOTED
UR	URINAL
VERT	VERTICAL
VEST	VESTIBULE
VCT	VINYL COMPOSITION TILE
VIF or V.I.F.	VERIFY IN FIELD
VWC	VINYL WALL COVERING
W	WEST
W.B.	WHITE MARKER BOARD
W/	WITH
W.C.	WATER CLOSET
WD	WOOD
W/O	WITHOUT
WSCT	WAINSCOT
WT	WEIGHT

MATERIALS LEGEND

- EARTH
- BRICK
- CMU
- CONCRETE
- STEEL
- ALUMINUM
- SHEET METAL
- HARDWOOD
- DIMENSIONAL LUMBER CONTINUOUS
- DIMENSIONAL LUMBER NON-CONTINUOUS
- GYP. BD.
- RIGID INSULATION
- BATT INSULATION
- PLYWOOD SHEATHING
- GROUT, MORTAR OR SAND
- E.I.F.S.
- PLASTER ON METAL LATH
- GRAVEL
- CEILING TILE OR CERAMIC TILE
- GLASS

SYMBOLS LEGEND

THE FOLLOWING SYMBOLS APPLY TO ALL ARCHITECTURAL SHEETS BUT NOT TO OTHER DISCIPLINES DRAWING SHEETS.

- WALL SECTION — SECTION NUMBER / DRAWING NUMBER
- BUILDING SECTION — SECTION NUMBER / DRAWING NUMBER
- COLUMN GRID LINE / DIMENSION GRID LINE — COLUMN NUMBER AND LETTER DESIGNATION; COLUMN GRID
- ROOM REFERENCE — MAIN ENTRY 101 — ROOM NAME; ROOM NUMBER USED FOR CONSTR
- PARTITION TYPE — 4A 4A — REFERENCE WALL TYPE DRAWING
- DOOR NUMBER — 101 — REFERENCE DOOR SCHEDULE
- DETAIL REFERENCE — DETAIL NUMBER / DRAWING NUMBER
- REFERENCE OR DATUM — 1ST. LEVEL F.F. ELEV.
- BUILDING ELEVATION REFERENCE — DETAIL NUMBER / DRAWING NUMBER
- CENTER LINE
- NORTH REFERENCE ARROW POINTS NORTH BUILDING NORTH IS SET WHEN BLDG IS ANGLED — NORTH
- REVISION REFERENCE — 1
- REFERENCE TO DIMENSION POINT — 4'-6" — FACE TO FACE OF STUD / FACE TO FACE OF MASS / ℄ COLUMN TO FACE OF MASS OR STUD — OR ℄ COLUMN / TO ℄ COLUMN
- WINDOW TYPE/ FRAME TYPE — A AA
- INTERIOR ELEV MARKER — A-A000 — ARROW POINTS TO ELEVATION DRAWN; DRAWING NUMBER; DETAIL LETTER
- PHOTOGRAPH MARKER — PHOTOGRAPH NUMBER / DRAWING NUMBER
- BREAK LINE

ARCHITECTS IN PARTNERSHIP

ARCHITECTS
INTERIOR DESIGNERS
PLANNERS

3220 MARSHALL AVENUE
NORMAN, OK 73072
TEL: 405.360.1300
FAX: 405.360.1431

SEAL:

STATE OF OKLAHOMA — GANG — 4780 — LICENSED ARCHITECT

08/08/2022

HENNESSEY FIRE DEPARTMENT
REMODEL/ADDITION
HENNESSEY, OKLAHOMA
501 S. MAIN STREET

REVISIONS

REV.	DATE	DESCRIPTION

PROJ. MANAGER: GL
DRAWN BY: STAFF
CHECKED BY: GL

DATE: 08/08/2022
PROJECT NO.: 2111

SHEET TITLE: GENERAL INFORMATION
SHEET NO.: G-002

8/8/2022 2:11:28 PM

BUILDING CODE INFORMATION

LIFE SAFETY AND FIRE PROTECTION CODE COMPLIANCE NARATIVE

GENERAL PROJECT INFORMATION

PROJECT NAME	HENNESSEY FIRE DEPARTMENT - REMODEL & ADDITION
PROJECT LOCATION	501 S. MAIN STREET, HENNESSEY, OKLAHOMA
PROJECT CONSTRUCTION PURPOSE	EXISTING CONSTRUCTION WITH ADDITION
BUILDING OWNER	BUSINESS
ESTIMATED PROJECT COST	$ 0
AUTHORITY HAVING JURISDICTION	STATE FIRE MARSHALL

PROJECT DESCRIPTION - SUMMARY

DEMOLISH PORTION OF EXISTING BUILDING. ADD NEW ADDITION.

ALTERNATES

1. DEMO EXISTING METAL WALL PANELS, REPLACE WITH NEW METAL WALL PANELS ON EAST SIDE. DEMO METAL ROOF AND GUTTER/DOWNSPOUTS EAST SIDE, REPLACE WITH NEW METAL ROOF PANELS, GUTTERS AND DOWNSPOUTS EAST SIDE.
2. ADD BRICK LEDGE TO EXISTING EAST SIDE.
3. ADD BRICK TO REMAINING BUILDING. PORTIONS OF NORTH AND SOUTH ELEVATIONS AND ALL OF EAST SIDE.

APPLICABLE DESIGN CRITERIA

	NAME	EDITION
STATE CODE ADOPTION		
X	INTERNATIONAL BUILDING CODE (IBC)	2018
X	INTERNATIONAL FIRE CODE (IFC)	2018
X	INTERNATIONAL FUEL GAS CODE (IFGC)	2018
X	INTERNATIONAL MECHANICAL CODE (IMC)	2018
X	INTERNATIONAL PLUMBING CODE (IPC)	2018
X	NATIONAL ELECTRIC CODE (NEC)	2017
X	INTERNATIONAL ENERGY CONSERVATION CODE (IECC)	2006
ADDITIONAL CODES		
X	2010 ADA STANDARDS FOR ACCESSIBLE DESIGN	2010

BUILDING OCCUPANCY, CONSTRUCTION AND SEPARATION INFORMATION

USE AND OCCUPANCY CLASSIFICATION (IBC CHAPTER 3)

BUILDING NAME	IBC CLASSIFICATION	AREA (SQFT)		OCCUPANCY LOAD
HENNESSEY FIRE DEPARTMENT - REMODEL & ADDITION	GROUP B (SECTION 304)	MAIN LEVEL	10,188	127
		2ND LEVEL	1,955	14
			-	-
		TOTAL	12,143 **GROSS**	141

SPECIAL REQUIREMENTS BASED ON USE AND OCCUPANCY (IBC CHAPTER 4)

SECTION 406	PRIVATE GARAGES AND CARPORTS, OPEN AND ENCLOSED PUBLIC PARKING GARAGES, MOTOR FUEL-DISPENSING FACILITIES AND REPAIR GARAGES SHALL COMPLY WITH SECTIONS 40621.1 THROUGH 460.2.9.

GENERAL BUILDING HEIGHTS AND AREA (IBC CHAPTER 5)

OCCUPANCY CLASSIFICATION	CONSTRUCTION TYPE: TYPE II B			
			ALLOWABLE	**AS-DESIGNED**
BUSINESS B	**HEIGHT (FEET), TABLE 504.3**		55'-0"	28'-3"
	STORIES, TABLE 504.4		4	2
	AREA (SQFT), SECTION 506.2.3			
		TOTAL GROSS	12,143	12,143

BUILDING ALLOWABLE AREA (IBC, SECTION 506.2.1)

THE BUILDING ALLOWABLE AREA: $A_a = A_t + (NS \times I_f)$

TYPES OF CONSTRUCTION (IBC CH. 6) - TYPE IIB

FIRE-RESISTANCE RATING REQUIREMENTS FOR BUILDING ELEMENTS (IBC, TABLE 601)

BUILDING ELEMENT	HOURLY RATING REQUIRED	HOURLY RATING PROVIDED	METHOD OF ACHIEVING RATING
PRIMARY STRUCTURAL FRAME (SEE IBC SECTION 202)	0	0	N/A
EXTERIOR BEARING WALLS	0	0	N/A
INTERIOR BEARING WALLS	0	0	N/A
EXTERIOR NONBEARING WALLS	0	0	N/A
INTERIOR NONBEARING WALLS	0	0	N/A
FLOOR CONSTRUCTION AND SECONDARY MEMBERS	0	0	N/A
ROOF CONSTRUCTION AND SECONDARY MEMBERS	0	0	N/A

FIRE-RESISTANCE RATING REQUIREMENTS FOR EXTERIOR WALLS BASED ON FIRE SEPARATION DISTANCE (IBC, TABLE 602)

FIRE SEPARATION DISTANCE = X (feet)	TYPE OF CONST	OCCUPANCY	FIRE RESISTANCE REQ.	FIRE RESISTANCE PROVIDED
10 X ≥ 30	IIB	B	0	0

FIRE AND SMOKE PROTECTION FEATURES (IBC CH. 7)

MAXIUMUM AREA OF EXTERIOR WALL OPENINGS BASED ON FIRE SEPARATION DISTANCE AND DEGREE OF OPENING PROTECTION (IBC, TABLE 705.8)

FIRE SEPARATION DISTANCE (feet)	DEGREE OF OPENING PROTECTION	ALLOWABLE AREA
15' TO LESS THAN 20'	UNPROTECTED, NON-SPRINKLERED	25%

FIRE WALL FIRE-RESISTANCE RATINGS (IBC, TABLE 706.4)

GROUP	FIRE RESISTANCE RATING (hours)	CONSTRUCTION NOTES
B	2	NO FIRE WALL SEPARATION NEEDED IN THIS PROJECT

FIRE-RESISTANCE RATING REQUIREMENTS FOR FIRE BARRIER ASSEMBLIES OR HORIZONTAL ASSEMBLIES BETWEEN FIRE AREAS (IBC, TABLE 707.3.10, SECTION 1023)

GROUP	FIRE RESISTANCE RATING (hours)	CONTRUCTION NOTES
B	2	NO FIRE BARRIER REQUIRED FOR THIS PROJECT

SHAFT ENCLOSURES (IBC, SECTION 713, SECTION 3002)

STORIES	FIRE RESISTANCE RATING (hours)	CONTRUCTION NOTES
2	1	NO SHAFT ENCLOSURES IN THIS PROJECT

OCCUPANCY LOAD, MEANS OF EGRESS AND PASSIVE FIRE PROTECTION

INTERIOR FINISHES (IBC CHAPTER 8)

INTERIOR WALL AND CEILING FINISH REQUIREMENTS BY OCCUPANCY (IBC, TABLE 803.13)

	SPRINKLERED		
GROUP	EXITS	CORRIDORS	ROOMS
BUSINESS B	CLASS B	CLASS C	CLASS C

FIRE PROTECTION SYSTEMS (IBC CHAPTER 9)

AUTOMATIC SPRINKLER SYSTEMS (IBC, SECTION 903)

STATUS	AUTOMATIC SPRINKLER SYSTEM IS NOT PROVIDED.

PORTABLE FIRE EXTINGUISHERS (IBC, SECTION 906)

FIRE EXTINGUISHERS FOR CLASS A FIRE HAZARDS (IBC, TABLE 906.3(1))

	ORDINARY HAZARD OCCUPANCY	AS REQUIRED	PROVIDED
MIN. RATED SINGLE EXTINGUISHER	2-A	2	8
MAXIMUM FLOOR AREA PER UNIT OF A	1,500 SQ. FT.		
MAXIMUM FLOOR AREA FOR EXTINGUISHER	11,250 SQ. FT.		
MAXIMUM TRAVEL DISTANCE TO EXTINGUISHER	75 FEET		

FIRE ALARM AND DETECTION SYSTEMS (IBC, SECTION 907.2)

		GROUP B	
FIRE ALARM SYSTEM	907.2.2	MANUAL	REQUIRED
SMOKE DETECTION SYSTEM	907.2.12.1	AUTOMATIC	NOT REQUIRED
OCCUPANCY NOTIFICATION SYSTEM	907.5	AUTOMATIC	NOT REQUIRED

EGRESS WIDTH (IBC, SECTION 1005)

MINIMUM REQUIRED EGRESS WIDTH SHALL BE A TOTAL WIDTH OF MEANS OF EGRESS IN INCHES NOT LESS THAN THE TOTAL OCCUPANCT LOAD SERVED BY THE MEANS OF EGRESS MULTIPLIED BY 0.20 INCHES PER OCCUPANT.

OCCUPANCY OF 136 x 0.20 = 27.2" MINIMUM EGRESS WIDTH

PER IBC TABLE 1020.2: MINIMUM CORRIDOR WIDTH 36"

MEANS OF EGRESS ILLUMINATION (IBC, SECTION 1008)

EMERGENCY LIGHTING	AUTOMATIC	REQUIRED

THE MEANS OF EGRESS, INCLUDING THE EXIT DISCHARGE, SHALL BE ILLUMINATED AT ALL TIMES THE BUILDING SPACE SERVED BY THE MEANS OF EGRESS IS OCCUPIED.

EXIT SIGNS (IBC, SECTION 1013)

EXIT SIGNS	AUTOMATIC	REQUIRED

EXITS AND EXIT ACCESS DOORS SHALL BE MARKED BY AN APPROVED EXIT SIGN READILY VISIBLE FROM ANY DIRECTION OF EGRESS TRAVEL.

EXIT ACCESS TRAVEL DISTANCE IN FEET (IBC, TABLE 1006.2.1, TABLE 1017.2, SECTION 1020.4)

	GROUP B			
	ALLOWED	**AS DESIGNED**	**ALLOWED**	**AS DESIGNED**
COMMON PATH OF TRAVEL	75	30' MAX		
DEAD END CORRIDORS	20	NA		
TRAVEL TO EXIT	200	142' MAX		

ACCESSIBILITY FEATURES

ACCESSIBILITY (IBC CHAPTER 11)

ACCESSIBLE PARKING SPACES (IBC, TABLE 1106.1)

PARKING REQUIREMENTS	ACCESSIBLE REQUIRED	ACCESSIBILE PROVIDED
N/A	N/A	N/A

PLUMBING SYSTEMS FEATURES

PLUMBING SYSTEMS (IBC CHAPTER 29)

CLASSIFICATION	BUSINESS			
OCCUPANCY LOAD	136			
			REQUIRED	**PROVIDED**
WATER CLOSETS /URINALS	**MALE**	FIRST 50: 1/25 EXCEEDING 50: 1/50	3	4
	FEMALE			
LAVATORIES	**MALE**	1 PER 40	4	4
	FEMALE			
BATHTUBS OR SHOWER			-	1
DRINKING FOUNTAINS	1 PER 100		2	2
OTHER	1 SERVICE SINK		1	1

OWNER TO PROVIDE WATER SUPPLY STATIONS. ONE AT FIRST FLOOR. ONE ON SECOND FLOOR WHEN SECOND FLOOR IS IN USE.

ARCHITECTS IN PARTNERSHIP

ARCHITECTS
INTERIOR DESIGNERS
PLANNERS

3220 MARSHALL AVENUE
NORMAN, OK 73072
TEL: 405.360.1300
FAX: 405.360.1431

SEAL:

STATE OF OKLAHOMA
GANG
LICENSED ARCHITECT
08/08/2022

HENNESSEY FIRE DEPARTMENT
REMODEL/ADDITION
501 S. MAIN STREET
HENNESSEY, OKLAHOMA

REVISIONS

REV.	DATE	DESCRIPTION

PROJ. MANAGER: GL
DRAWN BY: FMR
CHECKED BY: GL

DATE: 08/08/2022
PROJECT NO.: 2111

SHEET TITLE: LIFE SAFETY CODE ANALYSIS
SHEET NO.: G-100

8/8/2022 2:11:44 PM

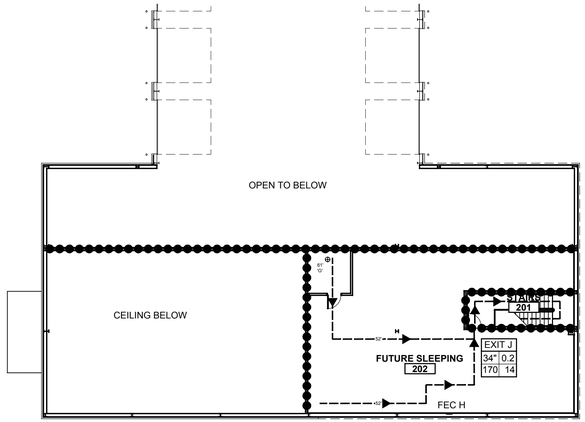

02 2ND LEVEL FLOOR PLAN

SCALE: 1/16"=1'-0"

NORTH

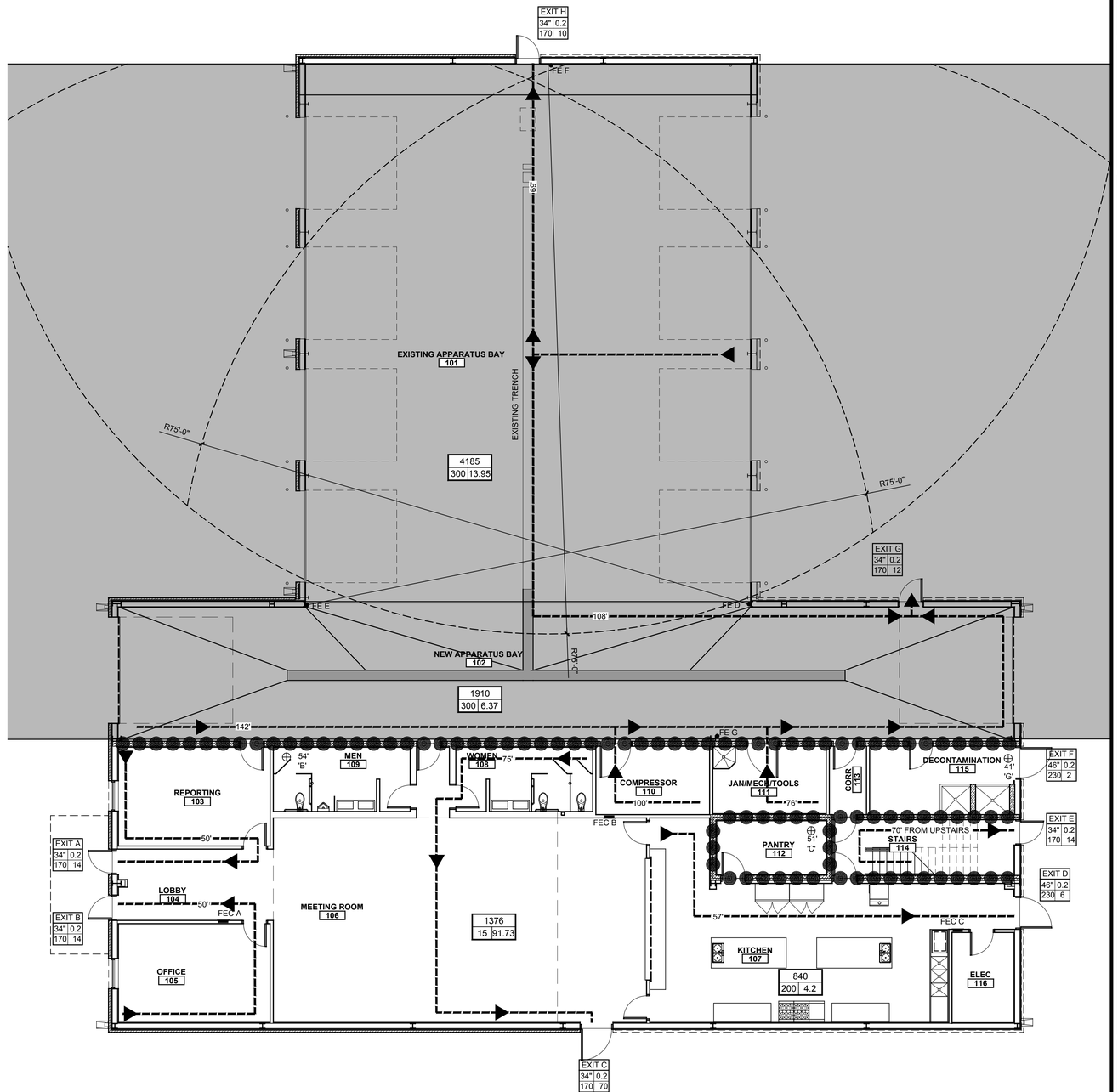

01 MAIN LEVEL FLOOR PLAN

SCALE: 1/8"=1'-0"

NORTH

MEANS OF EGRESS (IBC CHAPTER 10)

OCCUPANT LOAD CALCULATIONS (IBC TABLE 1004.1.1)

OCCUPANCY SCHEDULE

ROOM NUMBER	ROOM NAME	OCCUPANCY	OCCUPANCY AREAS		TABLE 1004.5- MAXIMUM FLOOR ALLOWANCES	
			NET	GROSS	S.F. PER PERSON	OCCU. LOAD
101	EXST. APP. BAY	S-2	0	4185	300	13.95
102	NEW APP. BAY	S-2	0	1910	300	6.37
103	REPORTING	B	0	261	150	1.74
104	LOBBY	B	0	198		
105	OFFICE	B	0	262	150	1.75
106	MEETING ROOM	A-2	0	1376	15	91.73
107	KITCHEN	A-2	0	840	200	4.20
108	WOMEN	B	0	158		
109	MEN	B	0	156		
110	COMPRESSOR	B	0	133	150	0.89
111	JAN/MECH/TOOLS	S-1	0	160	300	0.53
112	PANTRY	S-2	0	92	300	0.31
113	CORRIDOR	B	0	43		
114	STAIRS	B	0	157		
115	DECONTAMINATION	B	0	179	150	1.19
116	ELECTRICAL	B	0	98	150	0.65
201	FUTURE SLEEPING	B	0	1955	150	13.03
TOTAL OCCUPANCY LOAD						136

OCCUPANCY LEGEND KEY FOR SPECIALTY AREAS

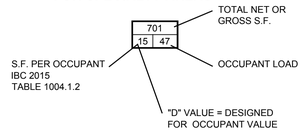

EGRESS DOOR LEGEND KEY

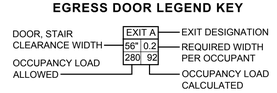

PLAN LEGEND:

SYMBOL	DESCRIPTION
FEC	FIRE EXTINGUISHER CABINET
FE	PORTABLE FIRE EXTINGUISHER W/WALL BRACKET
62' 'X'	DISTANCE TO NEAREST FIRE EXTINGUISHER (DIST) FEC 'X'
62'	EGRESS PATH AND TRAVEL DISTANCE
	1 HOUR RATED
	2 HOUR RATED FIRE WALL SEPARATION
	75' RADIUS OF FIRE EXTINGUISHER COVERAGE

ARCHITECTS IN PARTNERSHIP

ARCHITECTS
INTERIOR DESIGNERS
PLANNERS

3220 MARSHALL AVENUE
NORMAN, OK 73072
TEL: 405.360.1300
FAX: 405.360.1431

SEAL:



08/08/2022

HENNESSEY FIRE DEPARTMENT

REMODEL/ADDITION

HENNESSEY, OKLAHOMA

501 S. MAIN STREET

REVISIONS

REV.	DATE	DESCRIPTION

PROJ. MANAGER: GL
DRAWN BY: STAFF
CHECKED BY: GL

DATE: 08/08/2022
PROJECT NO.: 2111

SHEET TITLE: MAIN LEVEL FLOOR PLAN

SHEET NO.: G-101

8/8/2022 2:04:54 PM

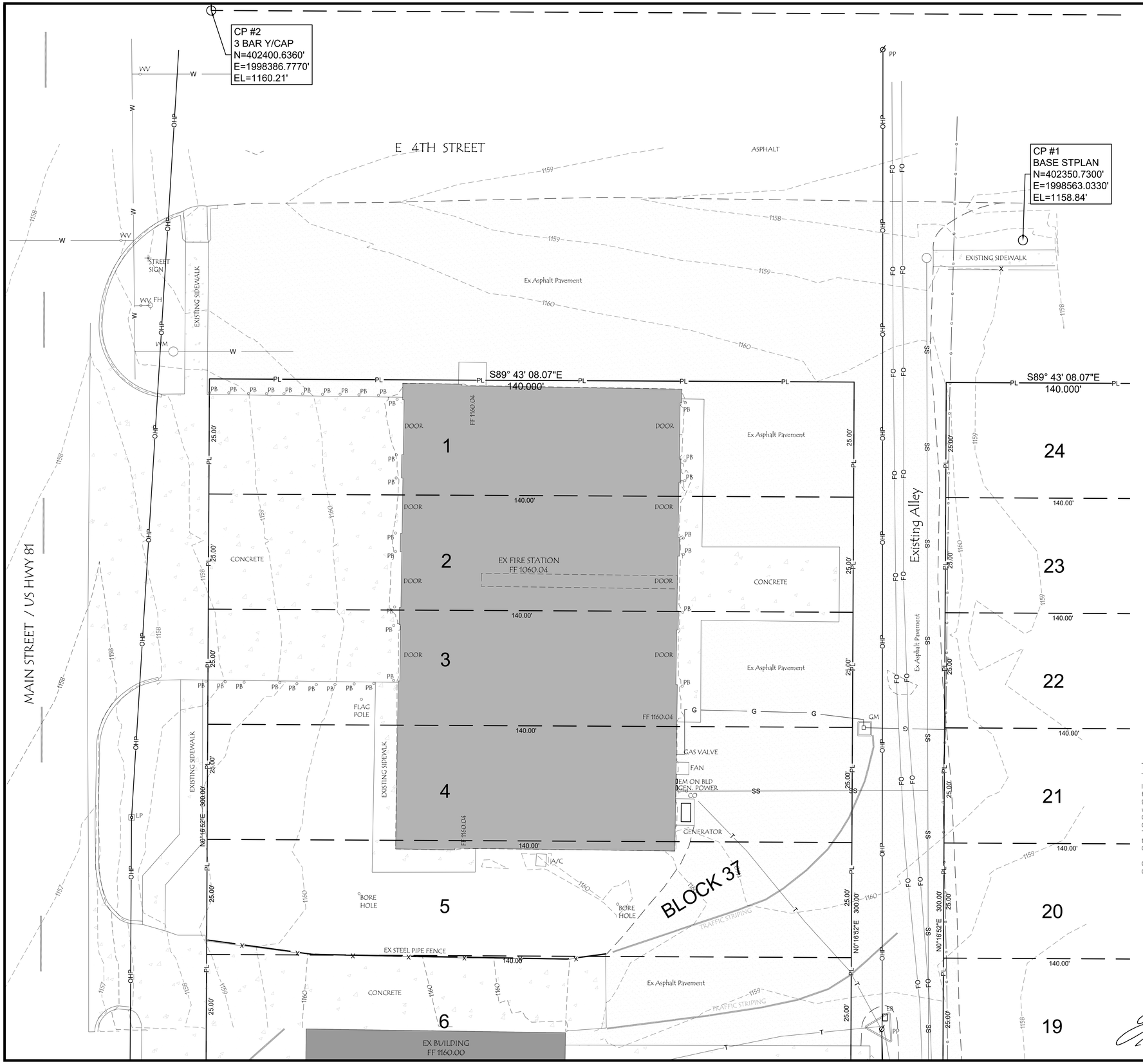

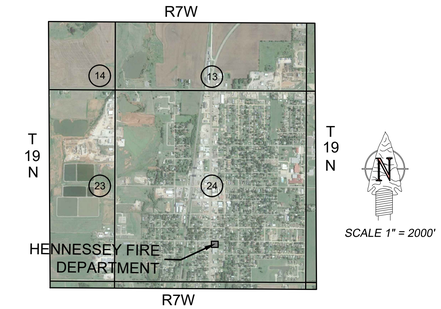

LOCATION MAP

SCALE 1" = 10'

10 0 10 20 30

UTILITY STATEMENT

UNDERGROUND UTILITIES SHOWN ARE ONLY APPROXIMATE LOCATIONS. DEPICTION OF UTILITY LINES WERE DRAWN FROM EXISTING ABOVE GROUND OBJECTS SUCH AS FIRE HYDRANTS, TUG BOXES, POWER POLES, ETC. ALL LOCATIONS AND DEPTHS SHOULD BE VERIFIED BY AN 'OKIE' LOCATE AND/OR POT HOLE OF UNDERGROUND UTILITIES TO VERIFY DEPTH.

BEFORE YOU DIG CALL OKIE 811

LEGEND

TUG BOX	TELEPHONE BOX	LP	LIGHT POLE
WM	WATER METER	PP	POWER POLE
WV	WATER VALVE	T	TRANSFORMER
FH	FIRE HYDRANT		TREE
MH	SANITARY MANHOLE		PROPERTY CORNER
T	TELEPHONE LINE	U/E	UNDERGROUND POWER LINE
FO	FIBER OPTIC LINE	OHP	OVERHEAD POWER LINE
G	GAS LINE	x	FENCE
W	WATER LINE		PROPERTY LINE
SS	SANITARY SEWER LINE		
	STORM SEWER		

TOPOGRAPHIC SURVEY CERTIFICATION

I, J. Steven Fox, certify that this project was completed under my direct and responsible charge from an actual survey made under my supervision; that this ground survey was performed at the 95% confidence level to meet Federal Geographic Data Committee Standards; that this survey was performed to meet the requirements for a topographic/planimetric survey meets the Oklahoma Minimum Technical Standards for the practice of land surveying as adopted by the Oklahoma State Board of licensure for Pressional Engineers and Land Surveyors.
The original data was obtained on May 05, 2021, and the survey was completed on July 01, 2021; that contours shown as broken lines meet the stated standard; and all coordinates are based on Oklahoma State Plain 'NAD83' and all elevations are based on NAVD 27.

Certificate of Authorization #5133
C of A Expires June 30, 2024

James Steven Fox, P.L.S. No. 1165, Oklahoma

PROFESSIONAL LAND SURVEYOR STEVEN FOX L.S.1165 OKLAHOMA

PROFESSIONAL ENGINEER J. STEVEN FOX 12297 OKLAHOMA

8 - AUG - 2022

(c) Copyright 2023 Fox Engineering, Inc.

FOX ENGINEERING CIVIL ENGINEERS
Fox Engineering, Inc.
211 E Street N.W., PO Box 666
Ardmore, Oklahoma 73401
Phone: 580.223.2319
Fax: 580.223.2492
E-mail: foxengineering@sbcglobal.net
ARDMORE -OKLAHOMA
CERTIFICATE OF AUTHORIZATION NO. 5133
CERTIFICATE OF AUTHORIZATION EXPIRES 6-30-2024

AIP
ARCHITECTS IN PARTNERSHIP

ARCHITECTS
INTERIOR DESIGNERS
PLANNERS
3220 MARSHALL AVENUE
NORMAN, OK 73072
TEL: 405.360.1300
FAX: 405.360.1431

SEAL:

HENNESSEY FIRE DEPARTMENT
REMODEL/ADDITION
501 S. MAIN STREET
HENNESSEY, OKLAHOMA

REVISIONS

REV.	DATE	DESCRIPTION

PROJ. MANAGER: GL
DRAWN BY:
CHECKED BY: GL
DATE: 08/08/2022
PROJECT NO.: 2111
SHEET TITLE: TOPOGRAPHY
SHEET NO.: C0

Z:\22026 HENNESSEY FIRE DEPARTMENT\22026 HENNESSEY FIRE DEPARTMENT TOPO.dwg, 1/17/2023 10:34:14 AM, 1:1

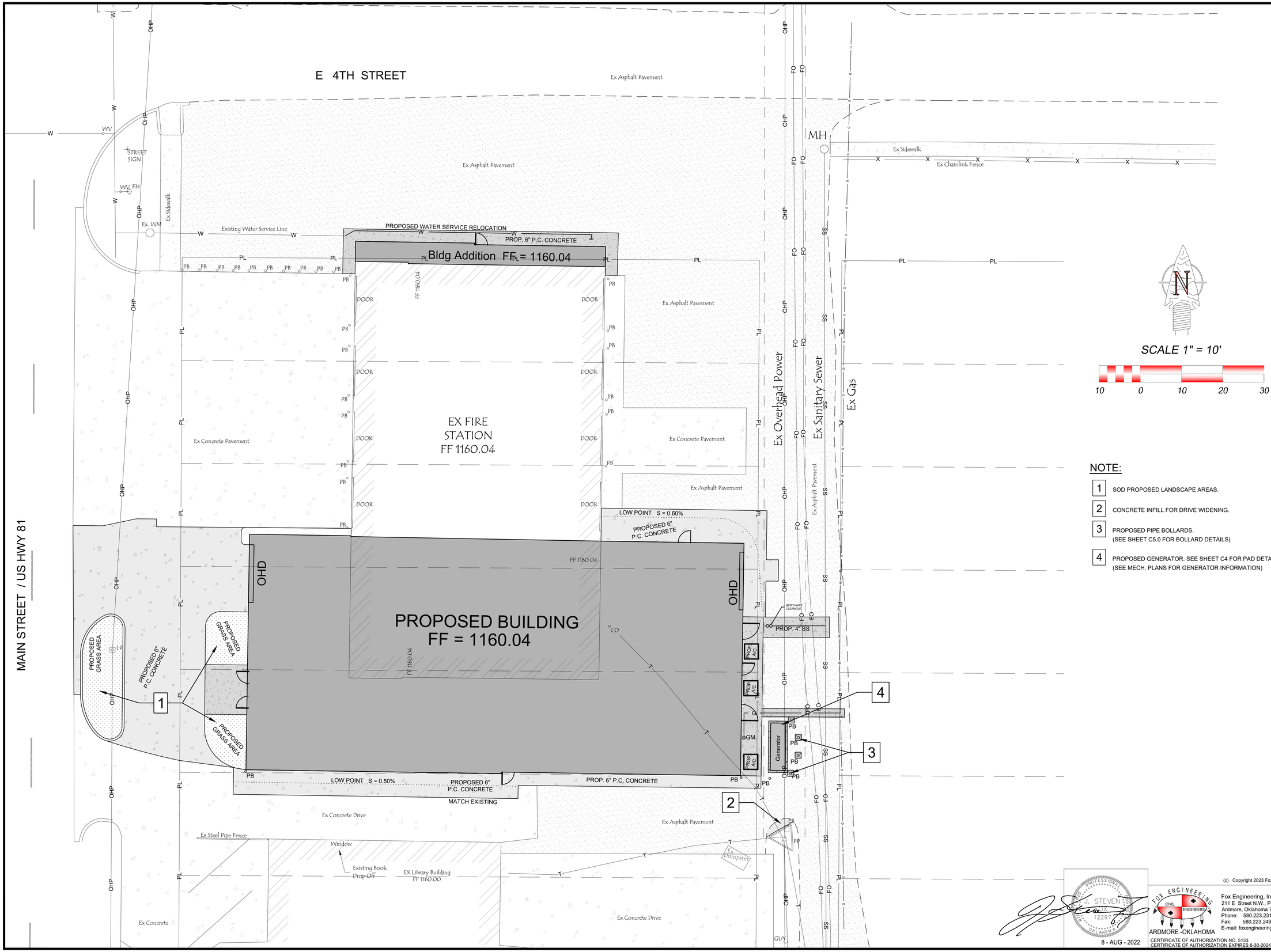

NOTE:

1. SOD PROPOSED LANDSCAPE AREAS.
2. CONCRETE INFILL FOR DRIVE WIDENING.
3. PROPOSED PIPE BOLLARDS. (SEE SHEET C5.0 FOR BOLLARD DETAILS)
4. PROPOSED GENERATOR. SEE SHEET C4 FOR PAD DETAILS. (SEE MECH. PLANS FOR GENERATOR INFORMATION)

AIP ARCHITECTS IN PARTNERSHIP

ARCHITECTS
INTERIOR DESIGNERS
PLANNERS
3220 MARSHALL AVENUE
NORMAN, OK 73072
TEL: 405.360.1300
FAX: 405.360.1431

SEAL:

HENNESSEY FIRE DEPARTMENT

REMODEL/ADDITION

501 S. MAIN STREET

HENNESSEY, OKLAHOMA

REVISIONS

REV.	DATE	DESCRIPTION

PROJ. MANAGER: GL
DRAWN BY:
CHECKED BY: GL

DATE: 08/08/2022
PROJECT NO.: 2111

SHEET TITLE: SITE PLAN

SHEET NO.: C1

(c) Copyright 2023 Fox Engineering, Inc.

J. STEVEN FOX 12297 OKLAHOMA
8 - AUG - 2022

FOX ENGINEERING CIVIL ENGINEERS
ARDMORE -OKLAHOMA
CERTIFICATE OF AUTHORIZATION NO. 5133
CERTIFICATE OF AUTHORIZATION EXPIRES 6-30-2024

Fox Engineering, Inc.
211 E Street N.W., PO Box 666
Ardmore, Oklahoma 73401
Phone: 580.223.2319
Fax: 580.223.2492
E-mail: foxengineering@sbcglobal.net

Z:\2026 HENNESSEY FIRE DEPARTMENT\2026 SITE PLAN.dwg, 1/17/2023 10:34:45 AM, 1:1

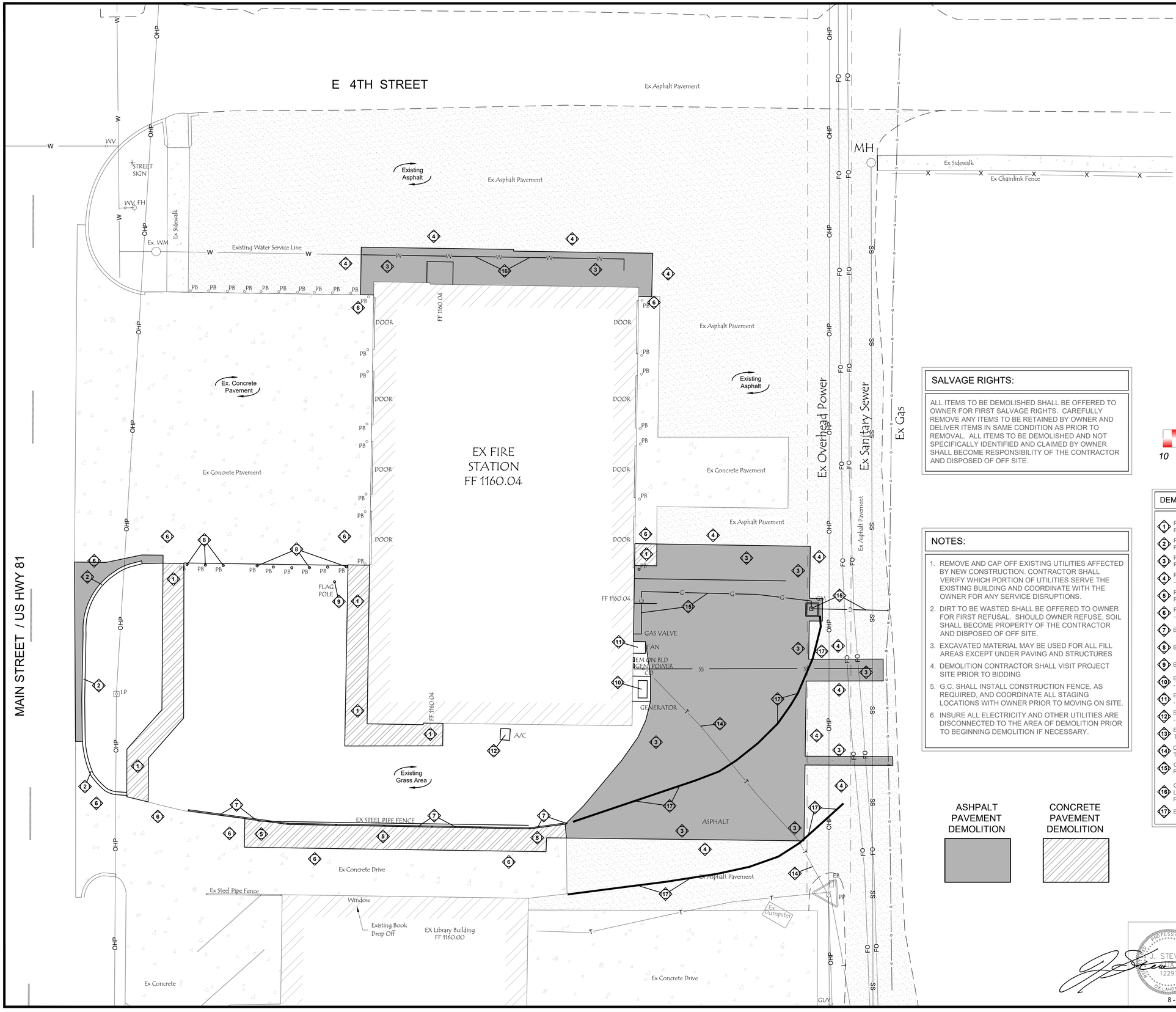

SALVAGE RIGHTS:

ALL ITEMS TO BE DEMOLISHED SHALL BE OFFERED TO OWNER FOR FIRST SALVAGE RIGHTS. CAREFULLY REMOVE ANY ITEMS TO BE RETAINED BY OWNER AND DELIVER ITEMS IN SAME CONDITION AS PRIOR TO REMOVAL. ALL ITEMS TO BE DEMOLISHED AND NOT SPECIFICALLY IDENTIFIED AND CLAIMED BY OWNER SHALL BECOME RESPONSIBILITY OF THE CONTRACTOR AND DISPOSED OF OFF SITE.

NOTES:

1. REMOVE AND CAP OFF EXISTING UTILITIES AFFECTED BY NEW CONSTRUCTION. CONTRACTOR SHALL VERIFY WHICH PORTION OF UTILITIES SERVE THE EXISTING BUILDING AND COORDINATE WITH THE OWNER FOR ANY SERVICE DISRUPTIONS.
2. DIRT TO BE WASTED SHALL BE OFFERED TO OWNER FOR FIRST REFUSAL. SHOULD OWNER REFUSE, SOIL SHALL BECOME PROPERTY OF THE CONTRACTOR AND DISPOSED OF OFF SITE.
3. EXCAVATED MATERIAL MAY BE USED FOR ALL FILL AREAS EXCEPT UNDER PAVING AND STRUCTURES
4. DEMOLITION CONTRACTOR SHALL VISIT PROJECT SITE PRIOR TO BIDDING
5. G.C. SHALL INSTALL CONSTRUCTION FENCE, AS REQUIRED, AND COORDINATE ALL STAGING LOCATIONS WITH OWNER PRIOR TO MOVING ON SITE.
6. INSURE ALL ELECTRICITY AND OTHER UTILITIES ARE DISCONNECTED TO THE AREA OF DEMOLITION PRIOR TO BEGINNING DEMOLITION IF NECESSARY.

ASHPALT PAVEMENT DEMOLITION

CONCRETE PAVEMENT DEMOLITION

SCALE 1" = 10'

10 0 10 20 30

DEMOLITION NOTES:

1. PORTION OF EXISTING CONCRETE SIDE WALK TO BE REMOVED AS SHOWN BY HATCHED AREAS.
2. PORTION OF EXISTING CONCRETE CURB TO BE REMOVED AS SHOWN BY HATCHED AREAS.
3. PORTION OF EXISTING ASPHALT PAVEMENT TO BE REMOVED AS SHOWN BY HATCHED AREAS.
4. PORTION OF EXISTING ASPHALT PAVEMENT TO REMAIN. - PROTECT DURING ALL DEMO OPERATIONS.
5. PORTION OF EXISTING CONCRETE PAVEMENT TO BE REMOVED AS SHOWN BY HATCHED AREAS.
6. PORTION OF EXISTING CONCRETE PAVEMENT TO REMAIN. - PROTECT DURING ALL DEMO OPERATIONS.
7. EXISTING PIPE FENCE TO BE REMOVED.
8. EXISTING PIPE BOLLARDS TO BE REMOVED.
9. EXISTING FLAG POLE TO BE REMOVED/RELOCATED.
10. EXISTING GENERATOR TO BE REMOVED/RELOCATED. - SEE MECH PLANS FOR NEW LOCATION & DETAILS.
11. EXISTING EXHAUST FAN TO BE REMOVED/RELOCATED. - SEE MECH PLANS FOR NEW LOCATION & DETAILS.
12. EXISTING HVAC & PAD TO BE REMOVED/RELOCATED. - SEE MECH PLANS FOR NEW LOCATION & DETAILS.
13. EXISTING SANITARY SEWER SERVICE LINE TO BE REMOVED TO EXISTING N-S SANITARY SEWER AS SHOWN.
14. CONTRACTOR TO REMOVE & RELAY EXISTING TELEPHONE LINE TO SERVE NEW CONSTRUCTION.
15. CONTRACTOR TO COORDINATE W/ GAS SERVICE PROVIDER FOR GAS LINE REMOVAL & GAS METER RELOCATION.
16. CONTRACTOR SHALL REMOVE EXISTING WATER SERVICE LINE AS NECESSARY TO AVOID PROPOSED BUILDING FOOTINGS.
17. EXISTING STRIPING TO BE REMOVED.

ARCHITECTS IN PARTNERSHIP

ARCHITECTS
INTERIOR DESIGNERS
PLANNERS

3220 MARSHALL AVENUE
NORMAN, OK 73072
TEL: 405.360.1300
FAX: 405.360.1431

SEAL:

HENNESSEY FIRE DEPARTMENT

REMODEL/ADDITION

501 S. MAIN STREET

HENNESSEY, OKLAHOMA

REVISIONS		
REV.	DATE	DESCRIPTION

PROJ. MANAGER: GL

DRAWN BY:

CHECKED BY: GL

DATE: 08/08/2022

PROJECT NO.: 2111

SHEET TITLE: DEMOLITION PLAN

SHEET NO.: C2

(c) Copyright 2023 Fox Engineering, Inc.

Fox Engineering, Inc.
211 E Street N.W., PO Box 666
Ardmore, Oklahoma 73401
Phone: 580.223.2319
Fax: 580.223.2492
E-mail: foxengineering@sbcglobal.net

ARDMORE -OKLAHOMA
CERTIFICATE OF AUTHORIZATION NO. 5133
CERTIFICATE OF AUTHORIZATION EXPIRES 6-30-2024

8 - AUG - 2022

C:\2026 HENNESSEY FIRE DEPARTMENT\2026 DEMOLITION PLAN.dwg 1/17/2023 10:34:56 AM 1:1

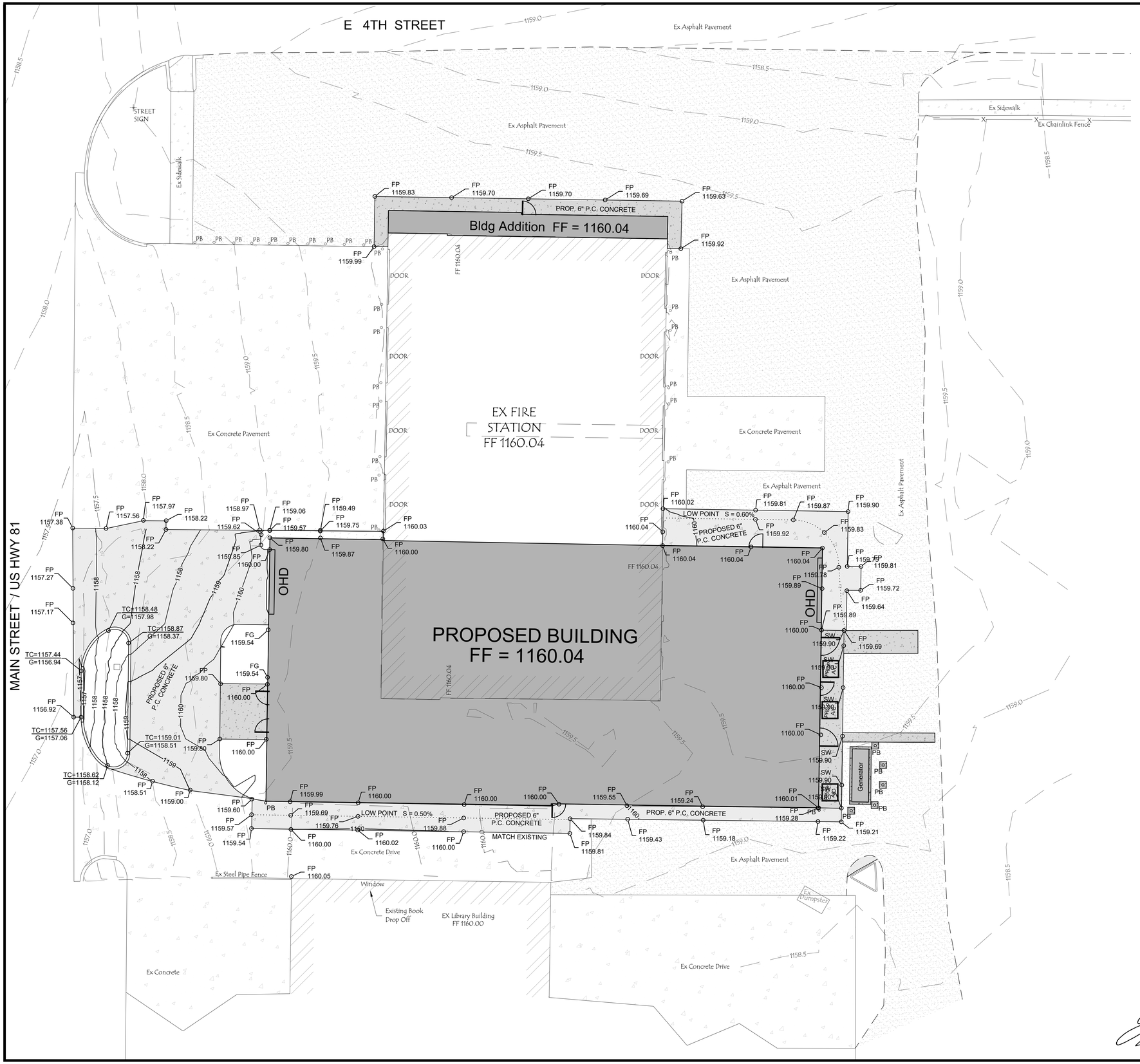

SCALE 1" = 10'

10 0 10 20 30

ENGINEERS GRADING NOTES

1. CONTRACTOR SHALL REMOVE & STOCKPILE TOPSOIL ON-SITE AT A LOCATION SPECIFIED BY OWNER.
2. COMPACT SUBGRADE TO AT LEAST 95% PROCTOR DENSITY.
3. IN FILL AREAS, CONTRACTOR SHALL PLACE FILL IN 6" LIFTS, COMPACTING EACH TO 95% PROCTOR DENSITY.
4. DURING COMPACTION OF SUBGRADE TO 95% PROCTOR DENSITY, IF SOFT MATERIAL IS ENCOUNTERED AND REQUIRED COMPACTION CANNOT BE ACHIEVED, THIS AREA SHALL BE OVER-EXCAVATED AND REPLACED WITH OTHER SELECT MATERIAL.
5. GENERAL CONTRACTOR SHALL SOLID SLAB SOD ALL BARE SOIL DISTURBED AREAS WITH BERMUDA SOD. ENGINEER SHALL INSPECT SUBGRADE PRIOR TO SOD PLACEMENT.
6. ALL SIDEWALKS SHALL HAVE SLOPE AS SHOWN ON THE GRADING PLAN, NEVER TO EXCEED A MAXIMUM CROSS-SLOPE OF 2.0%.
7. CONTRACTOR IS RESPONSIBLE FOR EFFECTIVE DRAINAGE OF ENTIRE SITE.
8. CONTRACTOR IS RESPONSIBLE FOR ENSURING A.D.A. COMPLIANCE ON ALL SIDEWALKS.
9. GENERAL CONTRACTOR SHALL PLACE TOPSOIL.

LANDSCAPING NOTE:

FINISH GRADES INCLUDE LANDSCAPE SOD AND/ OR BEDDING MATERIALS, ETC. LANDSCAPER SHALL REMOVE MATERIAL AS NECESSARY TO ACHIEVE FINISH GRADE. LANDSCAPER SHALL MAINTAIN DRAINAGE AWAY FROM THE BUILDING AND PROVIDE OPENINGS IN EDGING TO ENSURE WATER DOES NOT BECOME TRAEx PPED AGAINST THE BUILDING.

EARTHWORK SHALL NOT BE PERFORMED UNTIL EROSION CONTROL HAS BEEN INSTALLED BY CONTRACTOR

UTILITY STATEMENT

UNDERGROUND UTILITIES SHOWN ARE ONLY AEx PPROXIMATE LOCATIONS. DEPICTION OF UTILITY LINES WERE DRAWN FROM EXISTING ABOVE GROUND OBJECTS SUCH AS FIRE HYDRANTS, TUG BOXES, POWER POLES, ETC. ALL LOCATIONS AND DEPTHS SHOULD BE VERIFIED BY AN 'OKIE' LOCATE AND/OR POT HOLE OF UNDERGROUND UTILITIES TO VERIFY DEPTH.

(c) Copyright 2023 Fox Engineering, Inc.

J. STEVEN LOX 12297 OKLAHOMA

8 - AUG - 2022

FOX ENGINEERING
CIVIL ENGINEERS
ARDMORE -OKLAHOMA
Fox Engineering, Inc.
211 E Street N.W., PO Box 666
Ardmore, Oklahoma 73401
Phone: 580.223.2319
Fax: 580.223.2492
E-mail: foxengineering@sbcglobal.net
CERTIFICATE OF AUTHORIZATION NO. 5133
CERTIFICATE OF AUTHORIZATION EXPIRES 6-30-2024

ARCHITECTS IN PARTNERSHIP
ARCHITECTS
INTERIOR DESIGNERS
PLANNERS
3220 MARSHALL AVENUE
NORMAN, OK 73072
TEL: 405.360.1300
FAX: 405.360.1431

SEAL:

HENNESSEY FIRE DEPARTMENT
REMODEL/ADDITION
501 S. MAIN STREET
HENNESSEY, OKLAHOMA

REVISIONS

REV.	DATE	DESCRIPTION

PROJ. MANAGER: GL
DRAWN BY:
CHECKED BY: GL

DATE: 08/08/2022
PROJECT NO.: 2111

SHEET TITLE: GRADING PLAN
SHEET NO.: C3

C:\2026 HENNESSEY FIRE DEPARTMENT\2026 HENNESSEY FIRE DEPARTMENT.dwg, 1/17/2023 10:35:01 AM, 1:1

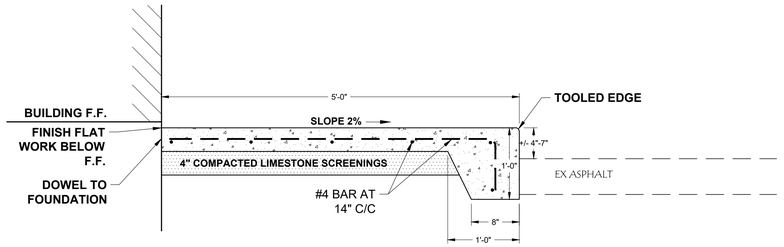

TYPICAL SECTION
RAISED SIDEWALK
EAST SIDE OF BUILDING

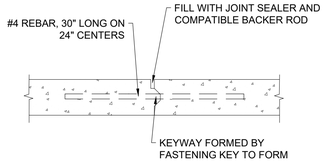

CONSTRUCTION JOINT

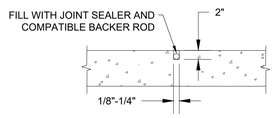

SAW IN CURB AT 15' CENTERS

CONTRACTION JOINT

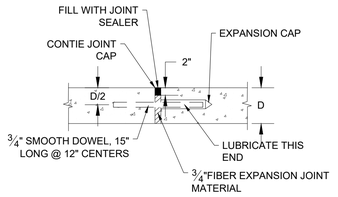

INSTALL IN CURB AT PT'S & PC'S OF ROADWAY
(DOWEL BARS IN SIDEWALK SHALL BE 1/2" Ø)
100' MAX. SPACING IN SIDEWALKS & CURBS

EXPANSION JOINT

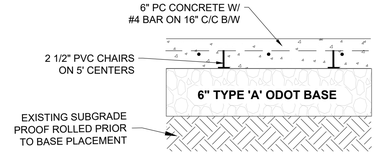

TYPICAL SECTION
CONCRETE PAVEMENT

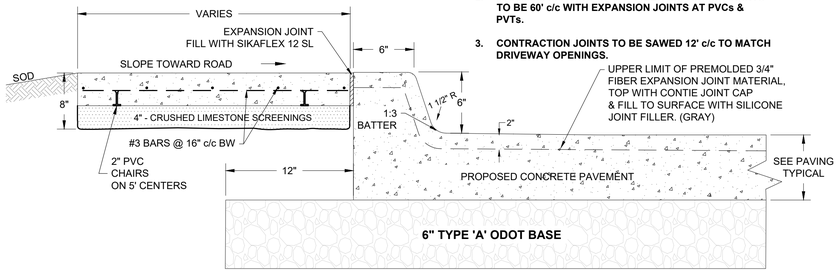

NOTE:
1. **USE 2 DOWEL BARS 3/4"x 24" ACROSS ALL EXPANSION JOINTS. COAT BARS WITH ASPHALT OR GREASE.**
2. **MAXIMUM SPACING OF 3/4" FIBER EXPANSION JOINTS TO BE 60' c/c WITH EXPANSION JOINTS AT PVCs & PVTs.**
3. **CONTRACTION JOINTS TO BE SAWED 12' c/c TO MATCH DRIVEWAY OPENINGS.**

TYPICAL SECTION
INTEGRAL CURB

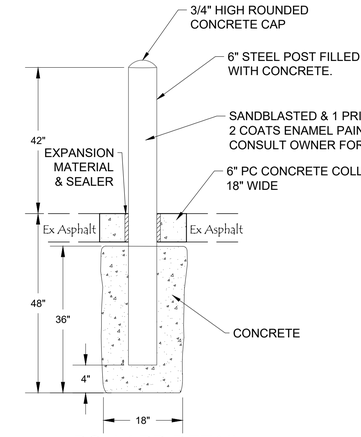

BOLLARD DETAIL

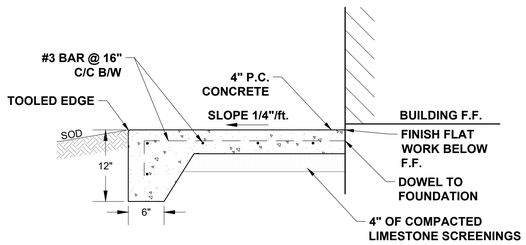

TYPICAL SECTION
EXTERIOR "FLATWORK"

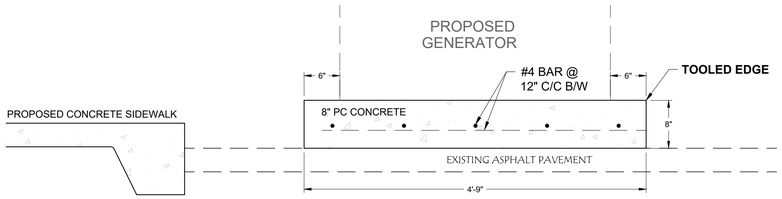

SECTION A-A

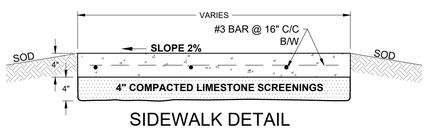

SIDEWALK DETAIL

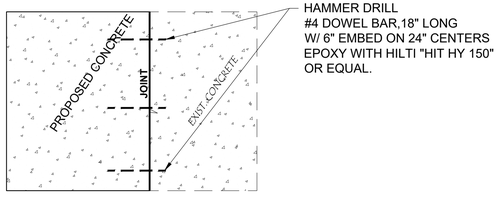

HAMMER DRILL
#4 DOWEL BAR,18" LONG
W/ 6" EMBED ON 24" CENTERS
EPOXY WITH HILTI "HIT HY 150"
OR EQUAL.

CONCRETE CONNECTION
DETAIL

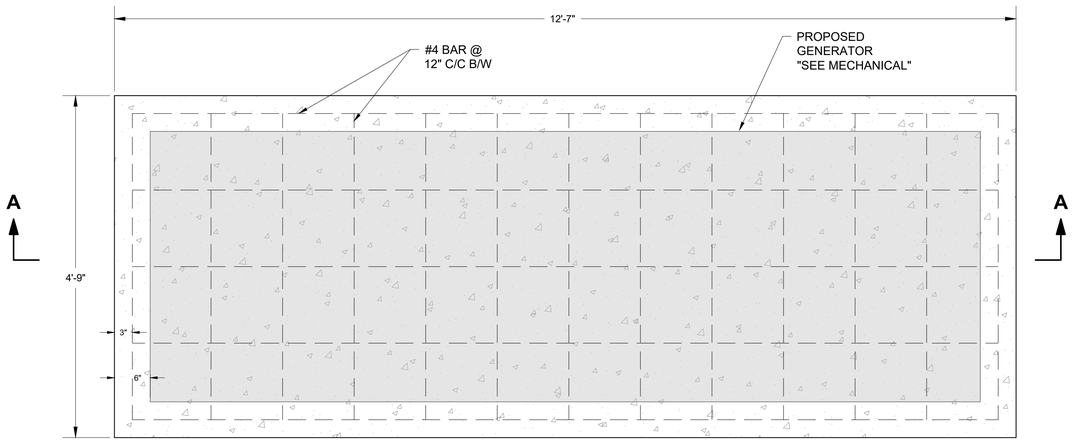

TYPICAL SECTION
GENERATOR PAD

NOTE:
CHAIRS REQUIRED FOR ALL REBAR.
MAX 5.0' SPACING FOR LARGER AREAS.

GENERAL NOTES

1. Excess excavation and all concrete and asphalt pavement to be removed from site shall be the property of and be disposed of by the contractor. Removal of existing pavement, concrete curb, headwalls, concrete ditch liner and other removal items called for on the plans shall not be paid for separately, but shall be included in the price bid for other items of work.
2. Concrete & asphalt shall be removed to a straight and even joint or shall be sawed on a line to provide straight, even connection. The cost shall be included in other items of work.
3. The contractor shall take care not to damage existing utility lines, drainage structures, driveways, sidewalks, poles or any other structures adjacent to the work area. The contractor shall be responsible for verifying the existence and location of underground utilities and obstructions, whether shown on the plans or not and shall be responsible for the protection thereof. Compliance with the warning and barricade sign specification will be required.
4. All concrete shall contain 6 sacks of cement per cu. yd. and shall obtain a minimum compressive strength of 4000 psi at 28 days.
5. During compaction of subgrade to 95% proctor density; if soft material is encountered; and required compaction cannot be achieved, this area shall be removed and replaced with other select material.
6. Silicone Sealant shall be gray and meet the requirements of current Federal specifications TT-S-001543 for Class A Sealants. The self-leveling silicone sealant (gun grade for curbs) shall be furnished in a one part silicone formulation. Acetic acid cure sealants are not acceptable.
7. All dowel bars shall be anchored with 'CONSPEC' SpecBond 101 or Equal.
8. 1-1/2" Crusher Run Gravel is equivalent to O.D.O.T. Type 'A' Agg. Base.
9. All sidewalks shall be constructed of 4" P.C. concrete with steel reinforcement having 4" limestone screenings for a base.
10. Incidental asphalt construction shall be 6" of Class 'B' surface mix paid by the SY.
11. Structures will be paid for at the lump sum bid for each structure which shall include all structural excavation, backfilling concrete, reinforcing steel, grates, frames and other incidental items called for on the plans and necessary for the completed structure.
12. The contractor shall protect all drainage structures from loads encountered during construction activities.
13. Concrete pavement around manhole covers and valve boxes shall be finished 1/4" below the adjacent asphalt pavement surface to allow for continued compaction of the asphalt base.
14. C.G.M. pipe and pipe arch shall be backfilled to a point 1 ft. above the pipe with crushed limestone screenings, except that backfill under pavement shall be limestone screenings to subgrade.
15. Shop drawings for reinforcing steel and castings are required.
16. Soil used to backfill behind curbs shall be a good sandy clay or top soil, for the top 4 inches.
17. The contractor shall deliver to the Inspector all delivery tickets indicating quantity or weight of asphalt and concrete when delivered to the job.
18. Call OKIE before digging - 1-800-522-6543.

ARCHITECTS IN PARTNERSHIP

ARCHITECTS
INTERIOR DESIGNERS
PLANNERS

3220 MARSHALL AVENUE
NORMAN, OK 73072
TEL: 405.360.1300
FAX: 405.360.1431

SEAL:

HENNESSEY FIRE DEPARTMENT
REMODEL/ADDITION
501 S. MAIN STREET
HENNESSEY, OKLAHOMA

REVISIONS		
REV.	DATE	DESCRIPTION

PROJ. MANAGER: GL
DRAWN BY:
CHECKED BY: GL

DATE: 08/08/2022
PROJECT NO.: 2111

SHEET TITLE: PAVING DETAILS

SHEET NO.: C4

(c) Copyright 2023 Fox Engineering, Inc.

Fox Engineering, Inc.
211 E. Street N.W., PO Box 666
Ardmore, Oklahoma 73401
Phone: 580.223.2319
Fax: 580.223.2492
E-mail: foxengineering@sbcglobal.net

ARDMORE -OKLAHOMA
CERTIFICATE OF AUTHORIZATION NO. 5133
CERTIFICATE OF AUTHORIZATION EXPIRES 6-30-2024

8 - AUG - 2022

Z:\2026 HENNESSEY FIRE DEPARTMENT\2026 PAVING DETAILS.dwg, 1/17/2023 10:35:11 AM, 1:1

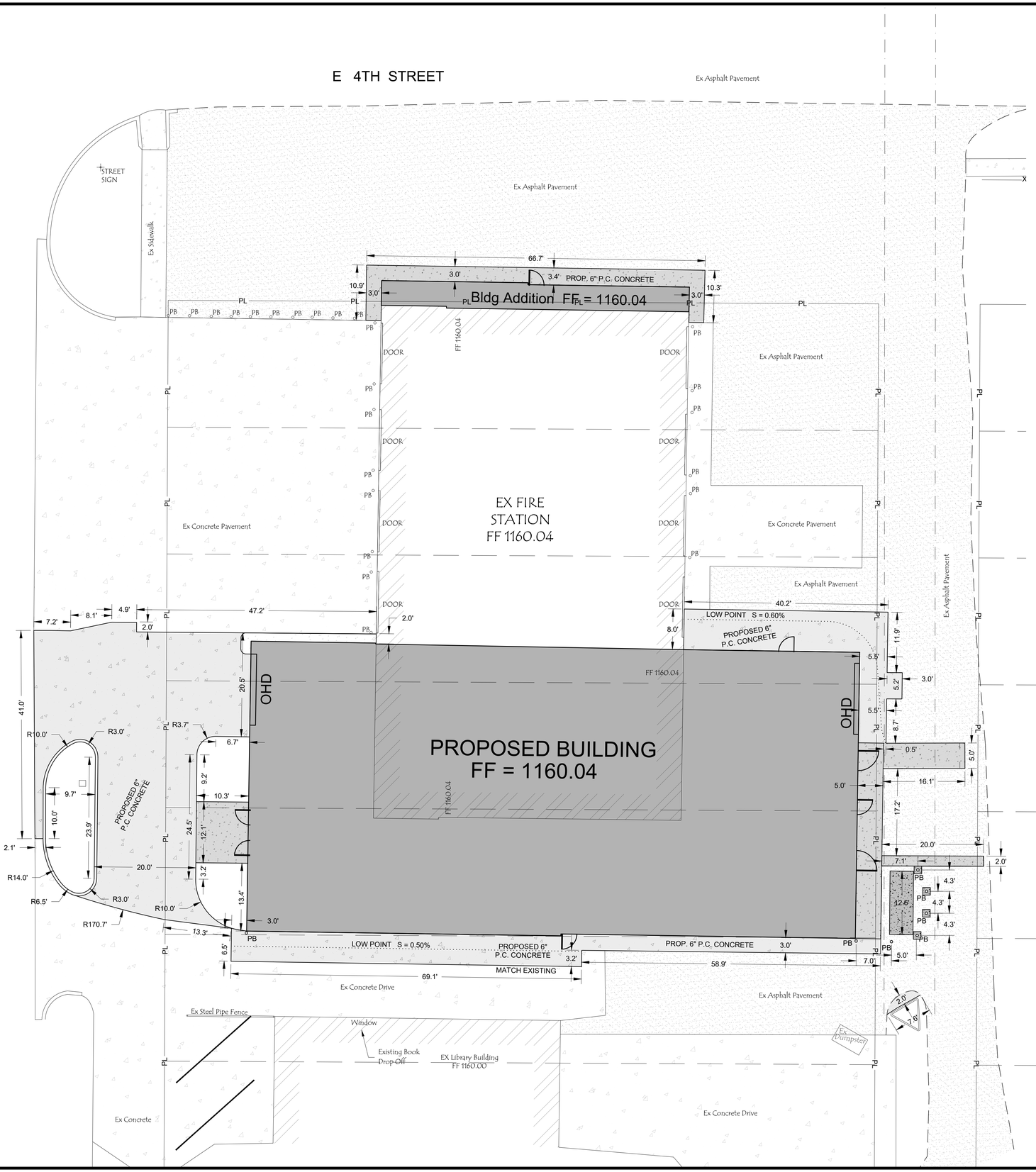

SCALE 1" = 10'

10 0 10 20 30

GENERAL STRIPING NOTES

1. PAINT SHALL BE USED IN PARKING LOT
2. GLASS BEADS SHALL NOT BE REQUIRED IN PAINT.
3. ALL PARKING LANE STRIPING SHALL BE 4" WIDE. (WHITE PAINT)
4. CONTRACTOR SHALL BE REQUIRED TO MEET ALL AMERICAN DISABILITY ACT CODES AND SPECIFICATIONS IN REGARD TO STRIPING.

ENGINEERS NOTES

1. ALL DIMENSIONS SHOWN ARE FROM BACK OF CURB.
2. STRIPING SPACING SHALL MEET REQUIREMENTS OF THE TOWN OF HENNESSEY UNIFIED CODE.
3. PARKING LOT ENTRANCE AND EXIT SIGNS NOT SHOWN ON ENGINEERING PLANS. REFER TO ARCHITECT'S PLANS.
4. CONTRACTOR IS ADVISED TO HAVE BUILDING & PARKING LOT STAKED BY SURVEYOR OR ENGINEER.

OKLAHOMA REGISTERED PROFESSIONAL ENGINEER J. STEVEN FOX 12297

8 - AUG - 2022

(c) Copyright 2023 Fox Engineering, Inc.

FOX ENGINEERING CIVIL ENGINEERS
Fox Engineering, Inc.
211 E Street N.W., PO Box 666
Ardmore, Oklahoma 73401
Phone: 580.223.2319
Fax: 580.223.2492
E-mail: foxengineering@sbcglobal.net
ARDMORE -OKLAHOMA
CERTIFICATE OF AUTHORIZATION NO. 5133
CERTIFICATE OF AUTHORIZATION EXPIRES 6-30-2024

ARCHITECTS IN PARTNERSHIP
ARCHITECTS
INTERIOR DESIGNERS
PLANNERS
3220 MARSHALL AVENUE
NORMAN, OK 73072
TEL: 405.360.1300
FAX: 405.360.1431

SEAL:

HENNESSEY FIRE DEPARTMENT

REMODEL/ADDITION

501 S. MAIN STREET

HENNESSEY, OKLAHOMA

REVISIONS		
REV.	DATE	DESCRIPTION

PROJ. MANAGER:	GL
DRAWN BY:	
CHECKED BY:	GL
DATE:	08/08/2022
PROJECT NO.:	2111

SHEET TITLE: DIMENSION PLAN

SHEET NO.: C5

K:\2022\06 HENNESSEY FIRE DEPARTMENT\22026 DIMENSION PLAN.dwg, 1/17/2023 10:35:19 AM, 1:1

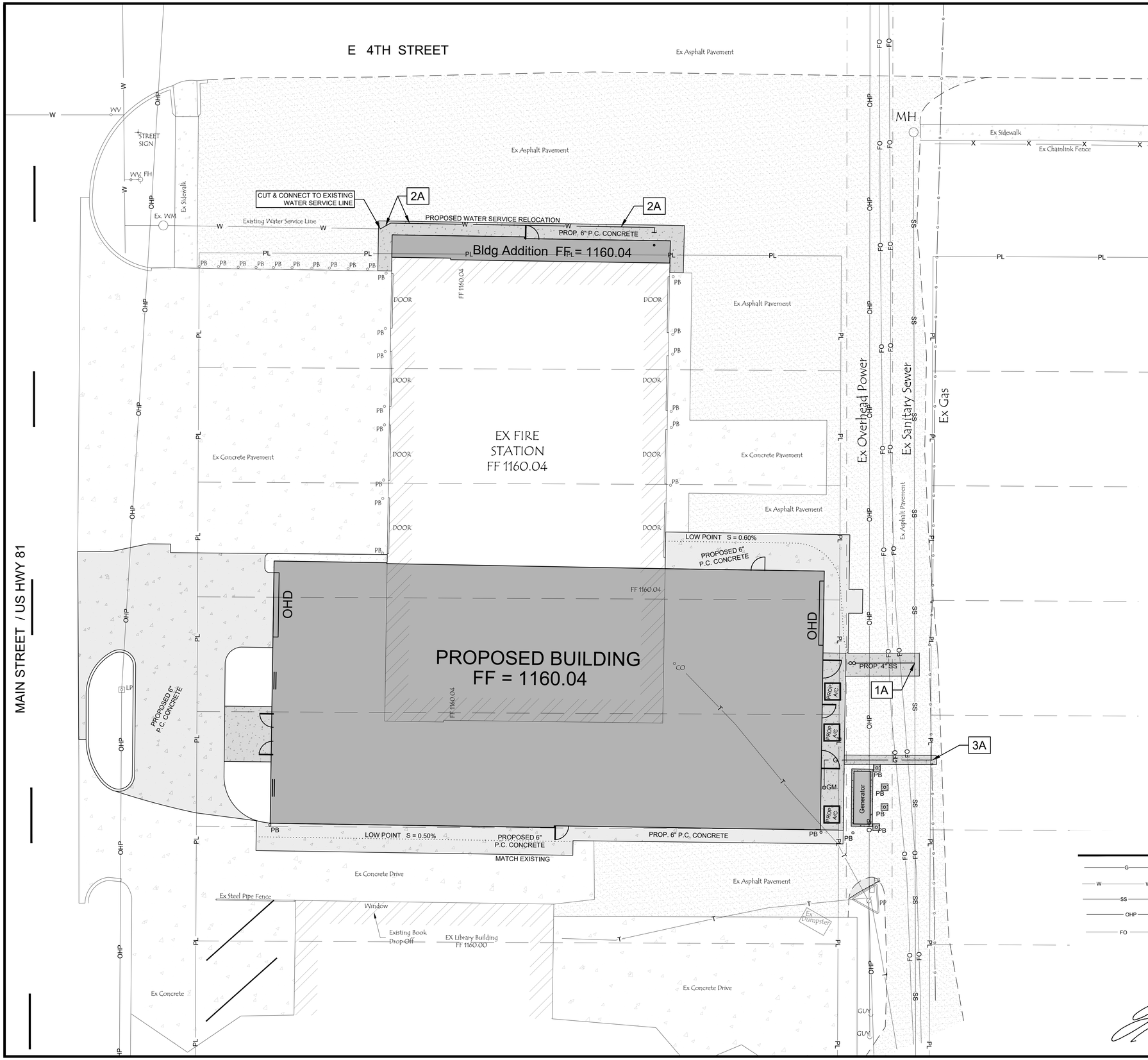

ENGINEERS NOTES

1. ALL UTILITY WORK SHALL MEET OR EXCEED CODES REQUIRED BY THE TOWN OF HENNESSEY.
2. NO WORK SHALL BE PERFORMED WITHOUT AN OKIE LOCATE.
3. SITE CONTRACTOR SHALL BE RESPONSIBLE FOR TEMPORARY SERVICES TO EXISTING BUILDING.
4. SITE UTILITY CONTRACTOR WILL BE RESPONSIBLE FOR THE EXTENSION OF ALL NEW UTILITIES STARTING AT A POINT 5' FROM FACE OF BUILDING.

(1) SANITARY SEWER ITEMS OF WORK

A. CONTRACTOR TO INSTALL WYE & RISER ON EXISTING SANITARY SEWER LINE & CONSTRUCT A 4" SERVICE LINE AND CLEANOUT AT EAST SIDE OF PROPOSED BUILDING AS SHOWN.

B. SEE MECHANICAL PLANS FOR BUILDING CONNECTION DETAILS

(2) WATERLINE ITEMS OF WORK

A. CUT & REMOVE EXISTING WATER SERVICE LINE LOCATED IN BUILDING FOOTPRINT.

B. SEE MECHANICAL PLANS FOR CONNECTION AT BUILDING.

(3) OTHER UTILITIES

A. COORDINATE WITH UTILITY COMPANY FOR CONNECTION TO EXISTING GAS LINE AND METER SERVICE SETTING.

B. 'DRY' UTILITY LINES SHALL BE PLACED A MINIMUM OF 24" BELOW GRADE & SHALL HAVE CRUSHER RUN BACKFILL TO SUBGRADE WHEN UNDER PAVEMENT.

C. SEE MECHANICAL DRAWINGS FOR A/C UNIT LOCATIONS.

L E G E N D

G — EXISTING GAS LINE	EX. GAS RISER
W — W — EXISTING WATER LINE	WV EX. WATER VALVE
SS — EX. SANITARY SEWER LINE	CO EX. SS CLEAN OUT
OHP — EX. OVERHEAD POWER LINE	PROPOSED INLET STRUCTURE
FO — EX. UNDERGROUND TELEPHONE LINE	PROPOSED 8" HDPE

(c) Copyright 2023 Fox Engineering, Inc.

8 - AUG - 2022

Fox Engineering, Inc.
211 E. Street N.W., PO Box 666
Ardmore, Oklahoma 73401
Phone: 580.223.2319
Fax: 580.223.2492
E-mail: foxengineering@sbcglobal.net
ARDMORE -OKLAHOMA
CERTIFICATE OF AUTHORIZATION NO. 5133
CERTIFICATE OF AUTHORIZATION EXPIRES 6-30-2024

ARCHITECTS IN PARTNERSHIP
ARCHITECTS
INTERIOR DESIGNERS
PLANNERS
3220 MARSHALL AVENUE
NORMAN, OK 73072
TEL: 405.360.1300
FAX: 405.360.1431

SEAL:

HENNESSEY FIRE DEPARTMENT
REMODEL/ADDITION
501 S. MAIN STREET
HENNESSEY, OKLAHOMA

REVISIONS		
REV.	DATE	DESCRIPTION

PROJ. MANAGER: GL
DRAWN BY:
CHECKED BY: GL

DATE: 08/08/2022
PROJECT NO.: 2111

SHEET TITLE: SITE UTILITY PLAN
SHEET NO.: C6

Z:\2026 HENNESSEY FIRE DEPARTMENT\2026 SITE UTILITY PLAN.dwg, 1/17/2023 10:53:31 AM, 1:1

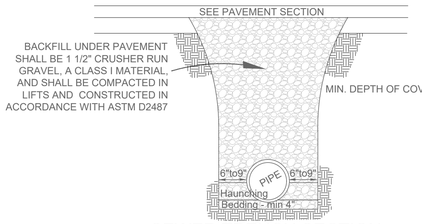

SEWER TRENCH SECTION
UNDER SIDEWALKS AND PAVEMENT

NOTE:
BEDDING FOR ALL UTILITIES, SLEEVES, ETC. UNDER ROADWAY AND DRIVEWAYS SHALL BE TYPE 'A' AGGREGATE BASE

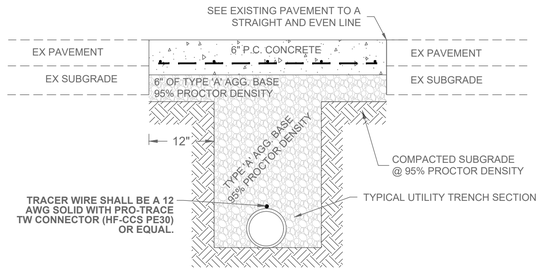

TYPICAL TRENCH SECTION
CONCRETE PAVEMENT REPAIR

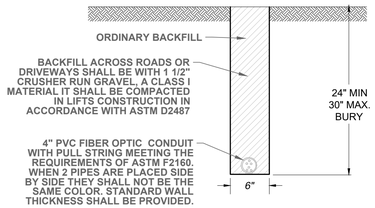

TYPICAL DITCH SECTION
DRY UTILITY

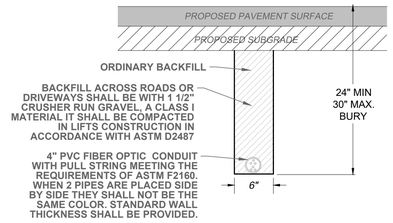

TYPICAL DITCH SECTION
DRY UTILITY

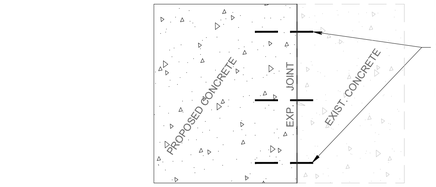

HAMMER DRILL #4 DOWEL BAR 12" LONG W/ 4" EMBED 24" ON CENTER EPOXY WITH HILTI "HIT HY 150" OR EQUAL.

CONCRETE CONNECTION DETAIL

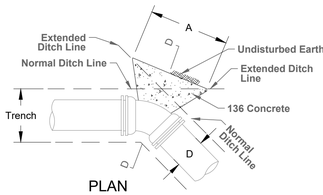

PLAN

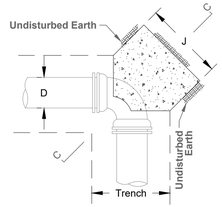

PLAN

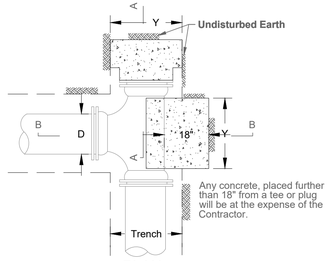

PLAN

TEES

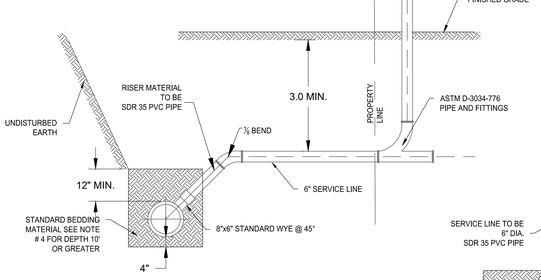

TYPICAL CLEAN OUT DETAIL

NOTES:
1. INSTALLATION AND BACKFILLING SHALL MEET MANUFACTURER'S RECOMMENDATIONS.
2. SELECT FILL CONSISTS OF EXCAVATED MATERIALS CONTAINING NO ROCKS LARGER THAN 50 MM (1 1/2").
3. STANDARD BEDDING MATERIAL (SBM) SHALL CONFORM TO ODOT 703.01, TYPE A AGGREGATE BASE OR FLOWABLE FILL PER SECTION 501.02(B).
4. COMPACTIONS REQUIREMENTS:
   a. NON PAVED AREAS: 90% MAXIMUM STANDARD PROCTOR DENSITY FOR COHESION LESS SOIL AND 85% FOR COHESIVE SOILS.
   b. PAVED AREAS: 95% MAXIMUM STANDARD PROCTOR DENSITY FOR COHESION LESS SOILS.
5. IF TRENCH IS DRY BEDDING SHALL BE 4" SAND, SCREENINGS, OR TYPE A AGGREGATE BASE, AND IF WET SHALL BE NO. 57 STONE PER SECTION 701.06(C).
6. IN SANDY SOIL, CONTRACTOR MAY BACKFILL WITH NATIVE MATERIAL AND USE WARNING TAPE 18" ABOVE PIPE.
7. NO WATER JETTING ALLOWED.

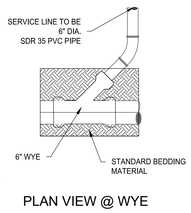

PLAN VIEW @ WYE

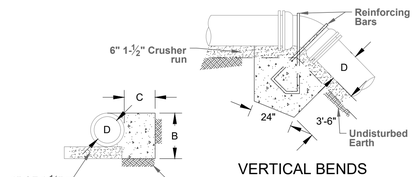

VERTICAL BENDS

SECTION D-D
45°, 22 1/2°, 11 1/4° BENDS

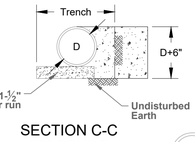

SECTION C-C
90° BENDS

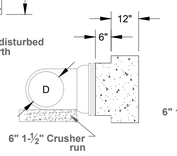

SECTION A-A

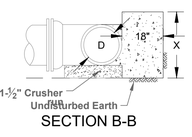

SECTION B-B

DIMENSIONS FOR CONCRETE ANCHORAGES												
Pipe	Trench	45° Bend			22 1/2° Bend			11 1/4° Bend			Tee or Plug		
Dia.	Width	A	B	C	A	B	C	A	B	C	X	Y	J
36	60	7'-0"	3'-0"	2'-6"	6'-0"	3'-0"	2'-6"	6'-0"	3'-0"	2'-6"	4'-0"	3'-4"	6'-5"
30	54	5'-6"	2'-6"	2'-0"	4'-6"	2'-6"	2'-0"	4'-6"	2'-6"	2'-0"	3'-6"	3'-0"	5'-8"
24	44	3'-9"	2'-6"	1'-10"	2'-6"	2'-6"	1'-1"	2'-0"	2'-6"	1'-0"	3'-3"	3'-0"	4'-9"
20	39	2'-9"	2'-2"	1'-8"	2'-0"	2'-2"	1'-1"	2'-0"	2'-2"	11"	3'-0"	2'-0"	4'-1"
18	37	2'-3"	2'-0"	1'-6"	2'-0"	2'-0"	1'-1"	2'-0"	2'-0"	11"	2'-3"	2'-0"	3'-9"
16	35	2'-0"	1'-10"	1'-5"	2'-0"	1'-10"	1'-1"	2'-0"	1'-10"	11"	1'-6"	2'-0"	3'-6"
12	30	2'-0"	1'-6"	1'-4"	2'-0"	1'-6"	1'-0"	2'-0"	1'-6"	11"	1'-0"	2'-0"	3'-0"
10	28	2'-0"	1'-4"	1'-4"	2'-0"	1'-4"	1'-0"	1'-10"	1'-4"	11"	1'-0"	1'-0"	2'-8"
8	26	2'-0"	1'-2"	1'-4"	1'-10"	1'-2"	1'-0"	1'-8"	1'-2"	11"	10"	1'-6"	2'-4"
6	24	2'-0"	1'-1"	1'-4"	1'-8"	1'-1"	1'-0"	1'-6"	1'-1"	11"	8"	1'-4"	2'-1"

COST FOR ALL THRUST BLOCKING SHALL BE INCLUDED IN PRICE BID FOR WATER PIPELINE

HORIZONTAL-CONCRETE ANCHORAGES

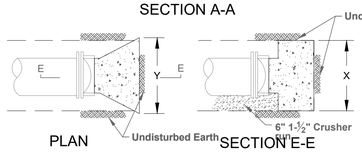

PLAN

SECTION E-E

PLUGS

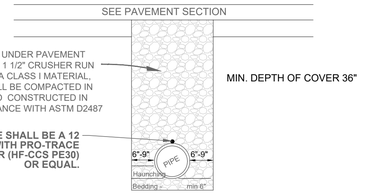

PAVEMENT TRENCH SECTION
WATER

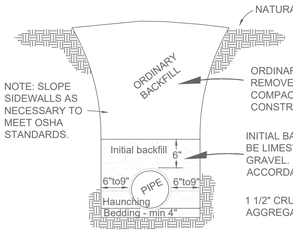

ORDINARY BACKFILL SHALL BE EXCAVATED MATERIAL REMOVED FROM THE TRENCH SECTION IT SHALL BE COMPACTED IN LIFTS THIS MATERIAL CAN BE CLASS I-V CONSTRUCTION IN ACCORDANCE WITH ASTM D2487

INITIAL BACKFILL,HAUNCHING, AND BEDDING SHALL BE LIMESTONE SCREENINGS OR 1 1/2" CRUSHER RUN GRAVEL. IT IS CLASS I MATERIAL. CONSTRUCTION IN ACCORDANCE WITH ASTM D2487

1 1/2" CRUSHER RUN IS ALSO KNOWN AS TYPE A AGGREGATE BASE

ORDINARY SEWER
TRENCH SECTION

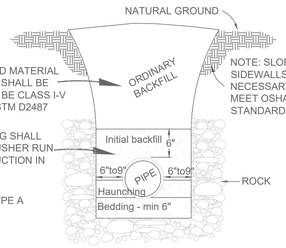

ROCK SEWER
TRENCH SECTION

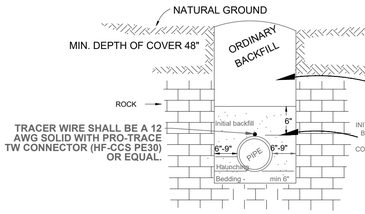

ROCK TRENCH SECTION
WATER

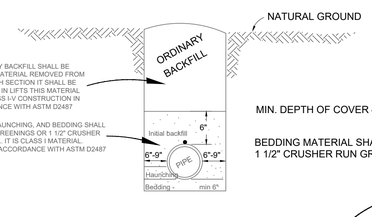

MIN. DEPTH OF COVER 48"

BEDDING MATERIAL SHALL BE 1 1/2" CRUSHER RUN GRAVEL

ORDINARY TRENCH SECTION
WATER

GENERAL CONSTRUCTION NOTES WATERLINE

1. When necessary to cross existing utility lines, vertical clearance shall be a minimum of 2.0' for wastewater and 1.5' for all other utilities.

2. DOMESTIC Water pipe shall be SCHEDULE 40 PVC, meeting the requirements of ASTM D-1785. Joints shall be solvent weld meeting the requirements of ASTM D-2855 or elastomeric gasket meetin the requirements of ASTM D-3212 or ASTM-F-913.

3. FIRE LINE Water pipe shall be Class 150 PVC AWWA C-900 . Joints shall be rubber gasket meeting the requirements of D-1784. All items such as Tees, Ells, Reducers, etc. shall be included in price bid for piping.

4. Cast iron water valves shall conform to AWWA Standard C509 latest revision. Cast iron valves shall be iron body being of the resilient seat type, mechanical joint, Class 200.

5. All non-metallic utility systems are to be provided with a pipeline locating wire (no.12 TW Copper Wire) installed on the buried pipeline. The locating wire shall be attached to all metal valve boxes with a material that will not deteriorate due to electrolysis and will furnish a continuous current ground at each location. A driven ground rod shall be provided at non-metallic boxes or structures in a manner that will permit the attachments of a locating instrument which induces an electric traceable signal.

6. Concrete for thrust blocks and collars shall have a minimum of 6 sacks of cement per cubic yard and shall reach a compressive strength of 3500 PSI in 28 days. Mixing water shall not exceed 5 gallons per sack of cement.

7. The Contractor shall take care not to damage existing utility lines, drainage structures, driveways, sidewalks, poles or any other structures adjacent to the work area.

8. The Contractor shall construct a 2'x2'x6" Concrete collar around all water valves in pavement.

9. The Contractor shall take care not to damage existing utility lines, drainage structures, driveways, sidewalks, poles or any other structures adjacent to the work area.

10. The Contractor shall be responsible for locating and protecting all existing utilities, pipelines, etc., whether underground or above.

11. The Contractor shall perform pressure and leakage test, flush and disinfect the line, all in accordance with the State Health Department requirements. Bedding:

12. All new, cleaned or repaired potable water mains shall be disinfected in accordance with the Department's rules for Public Water Supply Operation, OAC 252:630. As an alternate, American Water Works Association C651 specifications may be used[OAC 252:625-17-4(6)].

13. Call OKIE before digging - 1-800-522-6543.

SANITARY SEWER

1. Sanitary Sewer Pipe shall be Schedule 40 and conform to the following standards: All Poly-vinyl Chloride (PVC) sewer pipe shall meet the requirements of ASTM-D-3034-77c (SDR 35). All fittings shall be elastomeric gasket joining as referenced in ASTM-D-3034.

2. When necessary to cross existing utility lines, vertical clearance shall be a minimum of 24".

3. Concrete shall have a minimum of 6 sacks of cement per cubic yard and shall reach a compressive strength of 3500 PSI in 28 days. Mixing water shall not exceed 5 gallons per sack of cement.

4. The Contractor shall take care not to damage existing utility lines, drainage structures, driveways, sidewalks, poles or any other structures adjacent to the work area.

5. The Contractor shall construct a 2'x2'x6" Concrete collar around all sanitary sewer clean-outs.

ARCHITECTS IN PARTNERSHIP

ARCHITECTS
INTERIOR DESIGNERS
PLANNERS

3220 MARSHALL AVENUE
NORMAN, OK 73072
TEL: 405.360.1300
FAX: 405.360.1431

SEAL:

HENNESSEY FIRE DEPARTMENT
REMODEL/ADDITION
HENNESSEY, OKLAHOMA
501 S. MAIN STREET

REVISIONS		
REV.	DATE	DESCRIPTION

PROJ. MANAGER: GL
DRAWN BY:
CHECKED BY: GL

DATE: 08/08/2022
PROJECT NO.: 2111

SHEET TITLE: UTILITY DETAILS
SHEET NO.: C7

(c) Copyright 2023 Fox Engineering, Inc.

Fox Engineering, Inc.
211 E. Street N.W., PO Box 666
Ardmore, Oklahoma 73401
Phone: 580.223.2319
Fax: 580.223.2492
E-mail: foxengineering@sbcglobal.net

8 - AUG - 2022

ARDMORE -OKLAHOMA
CERTIFICATE OF AUTHORIZATION NO. 5133
CERTIFICATE OF AUTHORIZATION EXPIRES 6-30-2024

Z:\2023\05 HENNESSEY FIRE DEPARTMENT\23026 UTILITY DETAILS.dwg, 1/17/2023 10:35:41 AM, 1:1

GENERAL NOTES

FOUNDATION & EXCAVATION NOTES:

1. FOUNDATIONS HAVE BEEN DESIGNED IN ACCORDANCE WITH THE GEOTECHNICAL REPORT PREPARED FOR THIS PROJECT BY BURGESS ENGINEERING AND TESTING (PROJECT NO. 731-22078), DATED APRIL 21, 2022.
2. ALL VEGETATION, TOP SOIL, PAVING, AND ANY LOOSE MATERIAL BENEATH THE PROPOSED BUILDING SITE SHALL BE STRIPPED AND REMOVED. EXPOSED SUBGRADE SHALL BE PROOF-ROLLED AND SOILS WHICH ARE OBSERVED TO RUT AND DEFLECT EXCESSIVELY SHALL BE UNDERCUT AND REMOVED ALSO.
3. AFTER ALL STRIPPING AND CUTTING OPERATIONS WITHIN THE BUILDING AREA ARE COMPLETE, THE SUBGRADE SHALL THEN BE SCARIFIED TO A MINIMUM DEPTH OF 8 INCHES AND COMPACTED TO AT LEAST 95 PERCENT OF ITS STANDARD PROCTOR DENSITY WITHIN THE RANGE OF -3 PERCENT TO +3 PERCENT OF THE OPTIMUM MOISTURE CONTENT. THE GRADE SHALL THEN BE RAISED TO 10 INCHES BELOW FINISHED FLOOR ELEVATION WITH LOW VOLUME CHANGE MATERIAL. FILL MATERIAL SHALL BE PLACED IN LIFTS OF 9" OR LESS AND SHALL BE COMPACTED AS STATED ABOVE.
4. LOW VOLUME CHANGE MATERIAL SHALL MEET THE FOLLOWING REQUIREMENTS:

AMOUNT FINER THAN 3" SIEVE	=100 PERCENT
LIQUID LIMIT	= 35 MAXIMUM
PLASTICITY INDEX (PI)	= 15 MAXIMUM
	= 5 MINIMUM

5. THE FLOOR SLAB SHOULD BE CONSTRUCTED ON A COMPACTED SIX INCH THICK AGGREGATE BASE PLACED ON TOP OF A PROPERLY COMPACTED STRUCTURAL FILL. THESE AGGREGATE BASE MATERIALS SHOULD BE GRAVEL, FREE OF SHARP CORNERS OR EDGES, NATURAL STONE, WASH, FREE OF CLAY, SHALE, ORGANIC MATTER AND WITH 1/4 INCH MINIMUM SIZE AND 5/8 INCH MAXIMUM SIZE.
6. SHALLOW SPREAD FOOTINGS AND CONTINUOUS WALL FOOTINGS HAVE BEEN DESIGNED FOR ALLOWABLE SOIL BEARING PRESSURES OF 1,750 PSF AND 1,250 PSF RESPECTIVELY. FOOTINGS SHALL BEAR A MINIMUM OF 2 FEET BELOW FINISHED GRADE.
7. THE CONTRACTOR SHALL NOTIFY THE ARCHITECT OR ENGINEER OF RECORD IMMEDIATELY IN THE EVENT THAT THE SOILS CONDITIONS ENCOUNTERED VARY FROM THOSE SHOWN ON THE BORING LOGS.

REINFORCING STEEL NOTES:

1. ALL REINFORCING STEEL SHALL BE DETAILED, FABRICATED AND PLACED IN ACCORDANCE WITH THE REQUIREMENTS OF ACI 318 (LATEST EDITION), "BUILDING CODE REQUIREMENTS FOR STRUCTURAL CONCRETE" AND ACI 315 (LATEST EDITION), "STANDARD DETAILING MANUAL".
2. REINFORCING STEEL SHALL MEET ASTM A-615, GRADE 60.
3. PROVIDE BENT BARS AT ALL CORNERS. THE MINIMUM LENGTH OF EACH LEG OF THE BENT BAR SHALL BE EQUAL TO THE LAP SPLICE LENGTHS AS GIVEN BELOW.

#3 BARS	16"	#4 BARS	22"
#5 BARS	27"	#6 BARS	35"
#7 BARS	48"	#8 BARS	63"

4. UNLESS SHOWN OTHERWISE ON THE PLANS, BARS THAT ARE TOO LONG TO BE PLACED IN ONE PIECE SHALL BE LAP SPLICED A DISTANCE AS GIVEN ABOVE AND SPLICES SHALL BE STAGGERED. FOR HORIZONTAL BARS WITH MORE THAN 12" OF CONCRETE CAST BELOW, USE 1.4 TIMES THE LAP SPLICE LENGTHS SPECIFIED ABOVE.
5. WELDED WIRE FABRIC SHALL COMPLY WITH ASTM A-185. EDGE AND END SPLICES SHALL HAVE A MINIMUM LAP OF ONE FULL MESH AND SHALL BE HELD IN PLACE BY WIRING ALL LAPS SECURELY TOGETHER.
6. WELDED WIRE FABRIC SHALL BE SUPPLIED IN SHEETS (NOT ROLLS).
7. REINFORCING SHALL NOT BE WELDED IN ANY MANNER UNLESS APPROVED BY THE ENGINEER.

CONCRETE NOTES:

1. ALL CONCRETE SLABS-ON-GRADE SHALL HAVE A MINIMUM 28-DAY COMPRESSIVE STRENGTH OF 3,500 PSI. ALL CONCRETE SUPPORTED SLABS SHALL HAVE A MINIMUM 28-DAY COMPRESSIVE STRENGTH OF 3,500 PSI. ALL OTHER CONCRETE SHALL HAVE A MINIMUM 28-DAY COMPRESSIVE STRENGTH OF 3,000 PSI UNLESS NOTED OTHERWISE.
2. CONCRETE WORK SHALL CONFORM TO ALL REQUIREMENTS OF ACI 301 LATEST EDITION, "SPECIFICATIONS FOR STRUCTURAL CONCRETE FOR BUILDINGS", AND ACI 318 LATEST EDITION, "BUILDING CODE REQUIREMENTS FOR STRUCTURAL CONCRETE".
3. ALL EXPOSED EDGES OF CONCRETE SHALL BE CHAMFERED 3/4", UNLESS NOTED OTHERWISE.
4. CLEAR DISTANCES FROM CAST-IN-PLACE CONCRETE SURFACES TO REINFORCING SHALL BE NO LESS THAN THE FOLLOWING UNLESS NOTED OTHERWISE:

WALLS	2"
SIDES OF FOOTINGS	3"
BOTTOM OF FOOTINGS	3"
SLABS-ON-GRADE	2" FROM TOP
SUPPORTED SLABS	1"

5. PROVIDE ALL ACCESSORIES NECESSARY TO SUPPORT REINFORCEMENT AT POSITIONS SHOWN ON THE PLANS AND DETAILS. PLASTIC COATED ACCESSORIES SHALL BE USED IN ALL EXPOSED CONCRETE WORK.
6. THE GENERAL CONTRACTOR SHALL CHECK WITH ARCHITECTURAL, MECHANICAL, AND ELECTRICAL DRAWINGS AND THE SUB-CONTRACTORS FOR OPENINGS, SLEEVES, ANCHORS, HANGERS, INSERTS, SLAB DEPRESSIONS AND OTHER ITEMS RELATED TO THE CONCRETE WORK AND SHALL ASSUME RESPONSIBILITY FOR THEIR PROPER LOCATION.

METAL BUILDING SYSTEMS NOTES:

1. ALL COLUMNS, BEAMS, PURLINS, GIRTS, METAL SIDING, ROOFING, WIND BRACING AND OTHER STRUCTURAL APPURTENANCES NECESSARY TO COMPLETE THE SHELL OF THE BUILDING SHALL BE DESIGNED AND FABRICATED BY AN MBMA PRE-ENGINEERED METAL BUILDING MANUFACTURER, AND ERECTED BY AN EXPERIENCED METAL BUILDING ERECTOR.
2. ALL STRUCTURAL COMPONENTS AND THEIR CONNECTIONS, INCLUDING FOUNDATION ANCHOR BOLT DIAMETER, QUANTITY, & LOCATION, SHALL BE DESIGNED FOR THE METAL BUILDING MANUFACTURER BY A PROFESSIONAL ENGINEER, REGISTERED IN THE STATE OF OKLAHOMA, WHO SHALL AFFIX HIS SEAL TO THE ERECTION DRAWINGS.
3. ALL STRUCTURAL MILL SECTIONS OR WELDED PLATE SECTIONS SHALL BE DESIGNED IN ACCORDANCE WITH THE LATEST EDITION OF AISC "SPECIFICATIONS FOR THE DESIGN, FABRICATION, AND ERECTION OF STRUCTURAL STEEL FOR BUILDINGS," AND ALL COLD-FORMED STEEL STRUCTURAL MEMBERS SHALL BE DESIGNED IN ACCORDANCE WITH THE LATEST EDITION OF AISI "SPECIFICATIONS FOR THE DESIGN OF COLD-FORMED STEEL STRUCTURAL MEMBERS".
4. THE FOLLOWING LOADING CRITERIA SHALL BE INCORPORATED IN THE DESIGN:
   A. "RECOMMENDED DESIGN PRACTICES MANUAL" OF THE METAL BUILDING MANUFACTURERS ASSOCIATION (LATEST EDITION).
   B. COMBINATION DESIGN LOAD CONDITIONS SHOULD COMPLY WITH MBMA SPECIFICATIONS.
      DL
      DL + LL
      DL + LL + WL
      DL + LL + SEISMIC FORCE
   C. ALL ROOF PURLINS SHALL BE DESIGNED TO SUPPORT ALL DEAD LOADS, LIVE LOADS, WIND LOADS, AND A 10 PSF ALLOWANCE FOR SUSPENDED MECHANICAL EQUIPMENT, LIGHT FIXTURES, CEILINGS, ETC.
   D. THE BUILDING FRAME SHALL BE DESIGNED TO LIMIT THE LATERAL DEFLECTION TO H/260 AT THE BUILDING EAVE FOR THE BASIC WIND SPEED STATED IN THE DESIGN CRITERIA.
   E. UNLESS WIND BRACING IS USED TO TAKE LATERAL LOADS, LOAD TESTS ON METAL PANEL WALLS AND ROOF MUST BE SUBMITTED WHERE THESE ARE USED AS A DIAPHRAGM.
   F. LOCATE WIND BRACING ONLY IN LOCATIONS THAT WILL NOT INTERFERE WITH ARCHITECTURAL, MECHANICAL, OR ELECTRICAL ELEMENTS.
5. RIGID FRAMES
   A. RIGID FRAMES SHALL CONSIST OF WELDED PLATE SECTION COLUMNS AND ROOF BEAMS COMPLETE WITH THE NECESSARY SPLICE PLATES FOR BOLTED FIELD ASSEMBLY.
      a. ALL BASE PLATES, CAP PLATES, COMPRESSION PLATES, AND STIFFENER PLATES SHALL BE FACTORY WELDED INTO PLACE AND HAVE THE CONNECTION HOLES SHOP FABRICATED.
      b. ALL SPLICE PLATES SHALL BE SHOP FABRICATED COMPLETE WITH BOLT CONNECTION HOLES.
      c. COLUMNS AND ROOF BEAMS SHALL BE FABRICATED COMPLETE WITH HOLES IN WEBS AND FLANGES FOR THE ATTACHMENT OF SECONDARY STRUCTURAL MEMBERS AND BRACING.
   B. ALL BOLTS FOR FIELD ASSEMBLY OF FRAME MEMBERS SHALL BE HIGH STRENGTH BOLTS UNLESS INDICATED OTHERWISE ON THE ERECTION DRAWINGS.
6. ENDWALL STRUCTURALS
   A. FOR BEAM AND POST ENDWALLS, THE ENDWALL STRUCTURALS SHALL BE MEMBERS DESIGNED IN ACCORDANCE WITH THE LATEST EDITION OF AISI "SPECIFICATIONS FOR THE DESIGN OF COLD-FORMED STEEL STRUCTURAL MEMBERS."
   B. ENDWALL FRAMES SHALL CONSIST OF ENDWALL CORNER COLUMNS AS REQUIRED BY DESIGN CRITERIA.
      a. ALL SPLICE PLATES AND BASE CLIPS SHALL BE SHOP FABRICATED COMPLETE WITH BOLT CONNECTION HOLES.
      b. BEAMS AND COLUMNS SHALL BE SHOP FABRICATED COMPLETE WITH HOLES FOR THE ATTACHMENT OF SECONDARY STRUCTURAL MEMBERS.
7. PURLINS AND GIRTS
   A. PURLINS AND GIRTS SHALL BE "Z" SHAPED AND PRECISION ROLL FORMED.
   B. EAVE STRUTS SHALL BE "C" SECTIONS.
   C. VERTICAL DEFLECTION SHALL BE LIMITED TO A MAXIMUM 1/240 OF SPAN.
8. WELDING
   A. WELDING PROCEDURE AND OPERATOR QUALIFICATIONS AND WELDING QUALITY STANDARDS SHALL BE IN ACCORDANCE WITH AWS D-1.1 "STRUCTURAL WELDING CODE." INSPECTIONS SHALL BE AS DEFINED BY AWS PARAGRAPH 8.15.1.
   B. CERTIFICATION OF WELDER'S QUALIFICATIONS SHALL BE SUPPLIED WHEN REQUESTED.
9. STRUCTURAL PAINTING
   A. PRIOR TO PAINTING, THE FABRICATOR SHALL CLEAN THE STEEL OF LOOSE RUST, LOOSE MILL SCALE, DIRT, AND OTHER FOREIGN MATERIAL.
   B. THE FABRICATOR SHALL THEN FACTORY COAT ALL STEEL WITH PRIMER PAINT AS INDICATED IN THE SPECIFICATIONS.
10. METAL BUILDING FABRICATOR SHALL BE A MEMBER OF MBMA.
11. METAL BUILDING SHOP ERECTION DRAWING SHALL BE DETAILED USING GRIDS AS SHOWN ON THE STRUCTURAL DRAWINGS. THE METAL BUILDING DETAILER WILL BE PERMITTED TO CREATE ADDITIONAL GRIDS BUT THOSE GRID SHALL BE REFERENCED BACK TO THE EXISTING GRIDS ON THE STRUCTURAL DRAWINGS. IN NO CASE SHALL THE ERECTION DRAWING CONTAIN GRIDS WHICH HAVE IDENTICAL MARKS TO THE STRUCTURAL DRAWINGS BUT WITH DIFFERENT DIMENSIONS.

STRUCTURAL STEEL NOTES:

1. STRUCTURAL STEEL SHALL BE DETAILED, FABRICATED, AND ERECTED IN ACCORDANCE WITH THE AISC "SPECIFICATION FOR THE DESIGN, FABRICATION, AND ERECTION OF STRUCTURAL STEEL FOR BUILDINGS" AND THE AISC CODE OF STANDARD PRACTICE.
2. STRUCTURAL STEEL MATERIAL SHALL MEET THE REQUIREMENTS OF THE FOLLOWING ASTM STANDARDS:

WIDE FLANGE SHAPES:	A992 GRADE 50
STEEL TUBES:	A500 GRADE B
PIPE COLUMNS:	A53, TYPES E OR S, GRADE B OR A501
MISCELLANEOUS SHAPES:	A36

3. ALL STEEL CONNECTIONS NOT DETAILED OR OTHERWISE NOTED SHALL BE STANDARD AISC WELDED OR BOLTED CONNECTIONS. BOLTED CONNECTIONS SHALL BE MADE WITH 3/4" DIA. A-325 BOLTS UNLESS NOTED OTHERWISE.
4. ALL WELDING SHALL BE DONE IN ACCORDANCE WITH AWS D1.1 (LATEST EDITION) "STRUCTURAL WELDING CODE."
5. STEEL BOLTED CONNECTIONS SHALL HAVE NUTS TIGHTENED AND COLUMNS SHALL BE PLUMBED AND GROUTED IN PLACE BEFORE DECKING IS ATTACHED TO FRAMING.
6. ALL STEEL COLUMN BASE PLATES SHALL BE 3/4" THICK AND SHALL HAVE FOUR 3/4" DIA. ANCHOR BOLTS WITH WASHERS, DOUBLE NUTS, AND A MINIMUM 3 INCH HOOK UNLESS NOTED OTHERWISE. ANCHOR BOLTS SHALL EXTEND TO 3 INCHES CLEAR OF THE BOTTOM OF CONCRETE OR TO 18 INCHES, WHICHEVER IS LESS.
7. STEEL JOISTS SHALL BE FABRICATED AND ERECTED IN ACCORDANCE WITH THE LATEST STEEL JOIST INSTITUTE SPECIFICATIONS.
8. STEEL JOISTS SHALL BE FIELD WELDED TO SUPPORTING MEMBERS, EXCEPT, PROVIDE BOLTED CONNECTIONS WHERE COLUMNS ARE NOT FRAMED IN TWO DIRECTIONS.
9. ALL HORIZONTAL AND "X" BRIDGING SHALL MEET OR EXCEED THE SIZE AND SPACING REQUIREMENTS OF THE STEEL JOIST INSTITUTE SPECIFICATIONS OR THE MANUFACTURERS STANDARDS WHICHEVER IS MORE RESTRICTIVE.
10. ALL STEEL ROOF DECK SHALL BE PAINTED AND STEEL COMPOSITE DECK SHALL BE GALVANIZED. ALL STEEL DECK SHALL COMPLY WITH THE STEEL DECK INSTITUTE REQUIREMENTS AND SHALL HAVE A MINIMUM YIELD STRENGTH AS FOLLOWS:

    TYPE C DECK Fy = 60 KSI

11. IN BRICK VENEER AT ALL DOOR, WINDOW AND MECHANICAL OPENINGS LESS THAN 4'-0" WIDE, PROVIDE A 3 1/2" X 3 1/2" X 1/4" STEEL LINTEL ANGLE WHICH EXTENDS AT LEAST 6" BEYOND EACH JAMB. AT OPENINGS 4'-0" TO 7'-0" USE A 5" X 3 1/2" X 1/4" STEEL LINTEL ANGLE WHICH EXTENDS AT LEAST 6" BEYOND EACH JAMB.
12. THE STEEL FABRICATOR SHALL SUBMIT SHOP DRAWINGS FOR APPROVAL AS REQUIRED BY THE SPECIFICATIONS. THESE SHOP DRAWINGS SHALL INCLUDE ERECTION DRAWINGS WHICH ASSIGN A PIECE MARK TO EACH STRUCTURAL MEMBER. THE SHOP DRAWINGS SHALL ALSO INCLUDE STRUCTURAL SECTIONS WHICH IDENTIFY PLACEMENT OF ALL STEEL COMPONENTS WHOSE PLACEMENT IS NOT CLEARLY SHOWN ON THE ERECTION DRAWINGS.
13. THE STEEL FABRICATOR SHALL RETAIN A PROFESSIONAL ENGINEER, REGISTERED IN THE STATE OF OKLAHOMA, WHO SHALL DESIGN AND BE RESPONSIBLE FOR ALL CONNECTIONS NOT SHOWN OR ONLY PARTIALLY DETAILED ON THE DRAWINGS. THE FABRICATOR SHALL SUBMIT CONNECTION DRAWINGS WITH CALCULATIONS, SEALED BY HIS ENGINEER, WHICH WILL BE RETAINED FOR THE ARCHITECT'S FILE AND WILL NOT BE RETURNED.

COLD FORMED METAL FRAMING:

1. ALL COLD FORMED METAL FRAMING SHALL HAVE A MINIMUM THICKNESS OF 33 MILS (20 GA) AND SHALL BE SPACED AT A MAXIMUM OF 16 INCHES ON CENTER UNLESS NOTED OTHERWISE AND SHALL MEET THE MINIMUM STRUCTURAL PROPERTIES FROM THE AMERICAN IRON AND STEEL INSTITUTE - NORTH AMERICAN STANDARD FOR COLD-FORMED STEEL FRAMING LATEST EDITION. MINIMUM FLANGE WIDTH OF FRAMING MEMBERS SHALL BE 1 5/8 INCH AND THE LIP LENGTH OF THE C-SHAPE PORTION SHALL BE A MINIMUM OF 1/2 INCH.
2. WALL STUDS AS BACKING TO MASONRY VENEER SHALL HAVE A MINIMUM THICKNESS OF 43 MILS (18 GA).
3. METAL FRAMING SHALL BE IN ACCORDANCE WITH THE FOLLOWING, UNLESS NOTED OTHERWISE:

A. 54 MILS (16 GA) AND HEAVIER	ASTM A1003, GRADE 50 TYPE H (ST50H)
B. 43 MILS (18 GA) AND LIGHTER	ASTM A1003, GRADE 33 TYPE H (ST33H)
C. ACCESSORIES, TRACK AND OTHER MEMBERS	ASTM A1003, GRADE 33 TYPE H (ST33H) MINIMUM

4. DO NOT WELD 33 MILS (20 GA) AND LIGHTER FRAMING, UNLESS SPECIFICALLY NOTED ON THE PLANS AND DETAILS.
5. METAL FRAMING SHALL BE INSTALLED IN ACCORDANCE WITH THE MANUFACTURER'S WRITTEN RECOMMENDATIONS. HORIZONTAL BRACING FOR WALL STUDS SHALL BE PLACED AT 48 INCHES ON CENTER OR AS PER MANUFACTURER'S WRITTEN RECOMMENDATIONS IF LESS THAN 48 INCHES ON CENTER. APPLIED FINISH MATERIALS SHALL NOT BE CONSIDERED BRIDGING OR FLANGE BRACING UNLESS NOTED OTHERWISE.
6. WELDS SHALL BE PERFORMED BY OPERATORS QUALIFIED IN ACCORDANCE WITH SECTION 6.0 OF AWS D1.3, SHEET METAL.
7. TRACK SHALL BE 54 MILS (16 GA) MINIMUM FOR WALL STUDS 54 MILS (16 GA.) OR LIGHTER. TRACK SHALL MATCH WALL STUD THICKNESS FOR WALL STUDS 68 MILS (14 GA.) AND HEAVIER. TRACKS SHALL BE ANCHORED AS FOLLOWS:

A. TO STEEL	HILTI X-U, 0.157 INCH DIAMETER KNURLED SHANK FASTENERS AT 12 INCHES ON CENTER (ESR-2269) OR APPROVED EQUAL. UNLESS NOTED OTHERWISE IN CONTRACT DOCUMENTS.
B. TO CONCRETE	HILTI X-U, 0.157 DIAMETER KNURLED SHANK FASTENERS AT 8" O.C. WITH 1 1/2" EMBEDMENT (ESR-2269) OR APPROVED EQUAL, UNLESS NOTED OTHERWISE IN CONTRACT DOCUMENTS.

MASONRY NOTES:

1. CONCRETE MASONRY WORK SHALL CONFORM TO ALL REQUIREMENTS OF ACI 530/ASCE 5 (LATEST EDITION), "BUILDING CODE REQUIREMENTS FOR MASONRY STRUCTURES" AND ACI 530.1/ASCE 6 (LATEST EDITION), "SPECIFICATIONS FOR MASONRY STRUCTURES".
2. AT ALL CONCRETE BLOCK WALLS PROVIDE TROUGH BLOCK BEAM COURSES AT DOOR HEADS, WINDOW HEADS, AND ABOVE ALL MECHANICAL OPENING OVER 32". PROVIDE KNOCK-OUT BOND BEAM COURSES AT TOP COURSES, BOTTOM COURSES, BELOW WINDOWS, AND AT EVERY 6TH COURSE. BEAM COURSES ABOVE DOORS, WINDOWS, AND MECHANICAL OPENINGS SHALL EXTEND A MINIMUM OF 24" EITHER SIDE OF OPENINGS. BEAM COURSES SHALL BE REINFORCED AS FOLLOWS:

    4" BLOCK . . . . . 1-#3
    6" BLOCK . . . . . 1-#4
    8" BLOCK . . . . . 2-#4
    12" BLOCK . . . . . 2-#5

3. AT "HARDENED" CMU WALLS, ADDITIONAL BEAM COURSES SHALL BE ADDED SO THAT KNOCK-OUT BOND BEAMS OCCUR EVERY 3RD COURSE. THE REINFORCING SHALL BE AS STATED ABOVE.
4. UNLESS SHOWN OTHERWISE ON THE PLANS, BARS THAT ARE TOO LONG TO BE PLACED IN ONE PIECE SHALL BE LAP SPLICED A DISTANCE AS GIVEN IN REINFORCING STEEL NOTES AND SPLICES SHALL BE STAGGERED.
5. AT ALL OPENINGS IN CONCRETE BLOCK WALLS, REINFORCE ONE VERTICAL CELL ON EACH SIDE OF THE OPENING WITH A #5 BAR, UNLESS NOTED OTHERWISE.
6. AT TYPICAL CMU WALLS, VERTICAL CELLS OF CONCRETE BLOCK WALLS SHALL BE REINFORCED WITH #5 BARS AT 48" CENTERS.
7. AT "HARDENED" CMU WALLS, VERTICAL CELLS OF 8" CONCRETE BLOCK WALLS SHALL BE REINFORCED WITH #5 BARS AT 8" CENTERS (ALL CELLS REINFORCED) UNLESS NOTED OTHERWISE.
8. BENEATH ALL LOCATIONS WHERE STEEL BEAMS BEAR ON CONCRETE BLOCK WALLS, REINFORCE TWO VERTICAL CELLS WITH A #5 BAR IN EACH CELL, UNLESS NOTED OTHERWISE.
9. AT TYPICAL CMU WALLS, DOWELS SHALL EXTEND FROM THE FOUNDATION INTO THE CONCRETE MASONRY WALLS AT ALL LOCATIONS OF VERTICAL WALL REINFORCEMENT. DOWEL SIZE SHALL BE THE SAME SIZE AS WALL REINFORCING AND HAVE A MINIMUM EMBEDDED LENGTH OF 18".
10. AT "HARDENED" CMU WALLS, DOWEL SIZES FOR 8" BLOCK WALLS SHALL BE #5 BARS AT 8" CENTERS AND SHALL HAVE A MINIMUM EMBEDDED LENGTH OF 18".
11. ALL CONCRETE BLOCK TROUGHS AND CELLS THAT ARE REINFORCED SHALL BE FILLED WITH CONCRETE GROUT (NOT MORTAR) HAVING A COMPRESSIVE STRENGTH OF 3,000 PSI.
12. AT ALL LOCATIONS WHERE MASONRY WALLS INTERSECT, WALLS SHALL BE CONNECTED WITH 50-PERCENT OF UNITS INTERLOCKED AT THE WEB-FLANGE INTERFACE (I.E. RUNNING BOND).
13. AT "HARDENED" CMU WALLS ALL CONCRETE BLOCK ASSEMBLIES SHALL UTILIZE TYPE S MORTAR AND SHALL PROVIDE A MINIMUM PRISM STRENGTH, f'm, OF 2,500 PSI.

CODES, STANDARDS, AND DESIGN CRITERIA:

1. BUILDING CODE: 2018 INTERNATIONAL BUILDING CODE (IBC-2018)
2. ROOF LOADS:

DEAD LOAD: SELF WEIGHT OF MATERIALS UNLESS NOTED OTHERWISE	
COLLATERAL LOAD:	10 PSF
LIVE LOAD:	20 PSF

3. MEZZANINE LOADS:

DEAD	25 PSF
LIVE	60 PSF

4. SNOW LOADS:

GOVERNING CODE	ASCE 7-10
GROUND SNOW LOAD, Pg	10 PSF

5. WIND LOADS:

GOVERNING CODE	ASCE 7-10
DESIGN WIND SPEED	115 MPH
WIND EXPOSURE CLASSIFICATION	C
RISK CATEGORY	II
INTERNAL PRESSURE COEFF, GCpi	+/- 0.18

6. SEISMIC LOADS:

GOVERNING CODE	ASCE 7-10
RISK CATEGORY	II
IMPORTANCE FACTOR, Ie	1.0
SOIL SITE CLASSIFICATION	C
MAPPED SPECTRAL ACCELERATION, Ss	0.199
MAPPED SPECTRAL ACCELERATION, S1	0.066
DESIGN SPECTRAL ACCELERATION, Sds	0.212
DESIGN SPECTRAL ACCELERATION, Sd1	0.106
SEISMIC DESIGN CATEGORY	B

BASIC SEISMIC FORCE-RESISTING SYSTEM:
STEEL SYSTEM NOT SPECIFICALLY DETAILED FOR SEISMIC RESISTANCE

ANALYSIS PROCEDURE: EQUIVALENT LATERAL FORCE PROCEDURE

MISCELLANEOUS NOTES:

1. ALL DIMENSIONS ON STRUCTURAL DRAWINGS TO BE CHECKED AGAINST ARCHITECTURAL, MECHANICAL, AND ELECTRICAL DRAWINGS BY THE GENERAL CONTRACTOR BEFORE PROCEEDING WITH CONSTRUCTION AND ANY DISCREPANCIES ARE TO BE REPORTED TO THE ARCHITECT IMMEDIATELY.
2. THE CONTRACTOR SHALL ASSUME RESPONSIBILITY, UNRELIEVED BY REVIEW OF SHOP DRAWINGS OR PERIODIC OBSERVATION OF CONSTRUCTION, FOR COMPLIANCE WITH THE CONTRACT DOCUMENTS, FOR FABRICATION PROCESSES AND CONSTRUCTION TECHNIQUES, AND FOR SAFE CONDITIONS ON THE JOB SITE.
3. THE STEEL FABRICATOR SHALL BE RESPONSIBLE FOR FURNISHING ALL MISCELLANEOUS STEEL SHOWN ON THE ARCHITECTURAL DRAWINGS.
4. CONTROL AND CONSTRUCTION JOINTS SHALL BE LOCATED AS DIRECTED ON THE PLANS OR AS DIRECTED BY THE ARCHITECT.
5. EXPANSION JOINTS SHALL BE LOCATED AS SHOWN ON PLANS.

SHOP DRAWING NOTES:

1. REPRODUCTION OF THESE DRAWINGS FOR USE AS SHOP DRAWINGS, FABRICATION DRAWINGS, OR ERECTION DRAWINGS IS NOT AUTHORIZED AND, IF SUBMITTED, WILL BE REJECTED WITHOUT BEING CHECKED. A LICENSE TO USE ANY PORTION OR ALL OF THE STRUCTURAL CAD FILES FOR THE LIMITED PURPOSE OF ASSISTING THE CONTRACTOR'S PREPARATION OF SHOP DRAWINGS FOR SUBMITTAL UNDER THE CONSTRUCTION CONTRACT MAY BE PURCHASED FROM THE STRUCTURAL ENGINEER UNDER A STANDARD FORM OF AGREEMENT FOR A FEE OF $150.00. UNDER SUCH AN AGREEMENT, THESE FILES WILL BE PROVIDED IN AUTOCAD VERSION 2013.
2. SHOP DRAWING SUBMITTALS SHALL CONSIST OF PDF FILES. THESE FILES SHALL ALLOW ELECTRONIC STAMPING, REDLINING AND MARKUPS AND THEREFORE SHALL NOT BE LOCKED FROM EDITING.
3. AFTER SHOPS DRAWING REVIEW, RETURNED SHOP DRAWINGS WILL BE MARKED WITH EITHER "APPROVED", "APPROVED AS NOTED" OR "REVISE AND RESUBMIT". NONE OF THESE DESIGNATIONS RELIEVE THE CONTRACTOR OR SUBCONTRACTOR FROM COMPLIANCE WITH ALL OF THE CONSTRUCTION DOCUMENTS INCLUDING THE STRUCTURAL DRAWINGS AND SPECIFICATIONS. ANY REQUEST FOR DEVIATION FROM THESE DRAWINGS AND SPECIFICATION MUST BE MADE IN A "REQUEST FOR INFORMATION" THROUGH THE ARCHITECTS OFFICE.

SPREAD FOOTING SCHEDULE

MARK	FOOTING SIZE	REINFORCING
F1	3'-0" x 3'-0" x 1'-0"	(5) - #4 EA. WAY
F2	4'-0" x 4'-0" x 1'-0"	(6) - #4 EA. WAY
F3	5'-0" x 5'-0" x 1'-6"	(7) - #4 EA. WAY
F4	6'-0" x 6'-0" x 1'-6"	(7) - #5 EA. WAY

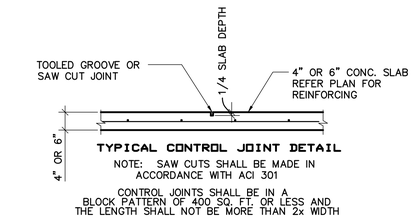

TYPICAL CONTROL JOINT DETAIL

NOTE: SAW CUTS SHALL BE MADE IN ACCORDANCE WITH ACI 301

CONTROL JOINTS SHALL BE IN A BLOCK PATTERN OF 400 SQ. FT. OR LESS AND THE LENGTH SHALL NOT BE MORE THAN 2x WIDTH

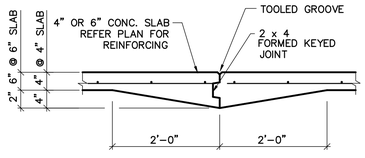

TYPICAL CONSTRUCTION JOINT

1 SLAB ON GRADE DETAILS

SCALE: 3/4" = 1'-0"

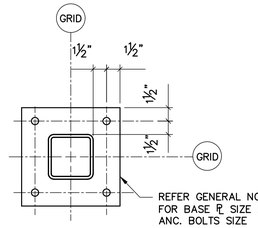

DETAIL "A"

2 BASE PLATE DETAILS

SCALE: 1-1/2" = 1'-0"

ARCHITECTS IN PARTNERSHIP

ARCHITECTS
INTERIOR DESIGNERS
PLANNERS

3220 MARSHALL AVENUE
NORMAN, OK 73072
TEL: 405.360.1300
FAX: 405.360.1431

SEAL:



OK CERT. OF AUTH. NO. 4530
EXPIRATION 06/30/24
PROJECT NO. 22-027

HENNESSEY FIRE DEPARTMENT

REMODEL/ADDITION

HENNESSEY, OKLAHOMA

501 S. MAIN STREET

REVISIONS

REV.	DATE	DESCRIPTION

PROJ. MANAGER: NK
DRAWN BY: NK
CHECKED BY: RM

DATE: 08/08/2022
PROJECT NO.: 2111

SHEET TITLE: GENERAL NOTES
SHEET NO.: S-101

Engineering Solutions, LLC
6801 North Broadway, Suite 215
Oklahoma City, OK 73116
Tel. (405) 848-4093

STATEMENT OF STRUCTURAL SPECIAL INSPECTIONS

STATEMENT OF SPECIAL INSPECTIONS NOTES:

1. THIS STATEMENT OF SPECIAL INSPECTIONS IS INCLUDED AS REQUIRED BY SECTION 1704 OF THE 2018 INTERNATIONAL BUILDING CODE.
2. THE OWNER SHALL EMPLOY ONE OR MORE QUALIFIED SPECIAL INSPECTORS FOR THIS PROJECT. THE SPECIAL INSPECTOR SHALL PROVIDE WRITTEN DOCUMENTATION TO THE BUILDING OFFICIAL DEMONSTRATING THEIR COMPETENCE AND RELEVANT EXPERIENCE OR TRAINING. EXPERIENCE OR TRAINING SHALL BE CONSIDERED RELEVANT WHEN THE DOCUMENTED EXPERIENCE OR TRAINING IS RELATED IN COMPLEXITY TO THE SAME TYPE OF SPECIAL INSPECTION ACTIVITIES FOR PROJECTS OF SIMILAR COMPLEXITY AND MATERIAL QUALITIES.
3. SPECIAL INSPECTOR(S) SHALL KEEP RECORDS OF SPECIAL INSPECTIONS AND TESTS. INSPECTION REPORTS SHALL BE FURNISHED BY THE SPECIAL INSPECTOR(S) TO THE BUILDING OFFICIAL, AND TO THE REGISTERED DESIGN PROFESSIONALS IN RESPONSIBLE CHARGE. SUCH REPORTS SHALL BE SUBMITTED AT THE COMPLETION OF EACH ITERATION OF A SPECIAL INSPECTION/SITE VISIT. REPORTS SHALL INDICATE THAT WORK INSPECTED WAS OR WAS NOT COMPLETED IN CONFORMANCE TO APPROVED CONSTRUCTION DOCUMENTS. DISCREPANCIES SHALL BE BROUGHT TO THE IMMEDIATE ATTENTION OF THE CONTRACTOR FOR CORRECTION. IF THEY ARE NOT CORRECTED, THE DISCREPANCIES SHALL BE BROUGHT TO THE ATTENTION OF THE BUILDING OFFICIAL AND TO THE REGISTERED DESIGN PROFESSIONAL IN RESPONSIBLE CHARGE PRIOR TO THE COMPLETION OF THAT PHASE OF THE WORK. A FINAL REPORT DOCUMENTING REQUIRED SPECIAL INSPECTIONS AND CORRECTION OF ANY DISCREPANCIES NOTED IN THE INSPECTIONS SHALL BE SUBMITTED AT A POINT IN TIME AGREED UPON PRIOR TO THE START OF WORK BY THE APPLICANT TO THE BUILDING OFFICIAL.
4. THE CONTRACTOR IS RESPONSIBLE FOR PROVIDING REASONABLE NOTICE TO THE SPECIAL INSPECTOR(S) REGARDING WHEN ELEMENTS OF THE PROJECT WILL BE READY FOR EFFICIENT IMPLEMENTATION OF SPECIAL INSPECTIONS. THE CONTRACTOR SHALL PROVIDE ACCESS TO THE LATEST VERSION OF ALL APPROVED PLANS AND SHOP DRAWINGS AS REQUIRED FOR THE SPECIAL INSPECTOR'S USE IN PERFORMING SPECIAL INSPECTIONS. THE CONTRACTOR SHALL GRANT ACCESS TO THE OWNER'S SPECIAL INSPECTOR(S) AS IS REASONABLY NECESSARY FOR THE PROPER PERFORMANCE OF SPECIAL INSPECTIONS.
5. SPECIAL INSPECTIONS DO NOT RELIEVE THE CONTRACTOR OF RESPONSIBILITY TO COMPLY WITH ALL REQUIREMENTS OF THE CONTRACT DOCUMENTS. CONSTRUCTION MEANS AND METHODS AND JOBSITE SAFETY ARE SOLELY THE RESPONSIBILITY OF THE CONTRACTOR.
6. REFER TO PROJECT SPECIFICATIONS FOR ADDITIONAL SPECIAL INSPECTION REQUIREMENTS. IF CONFLICTING REQUIREMENTS ARE FOUND, THE MORE STRINGENT PROVISION SHALL CONTROL UNLESS DIRECTED OTHERWISE IN WRITING BY THE STRUCTURAL ENGINEER OF RECORD.

INSPECTION OF FABRICATORS:

WHERE FABRICATION OF STRUCTURAL, LOADBEARING, OR LATERAL LOAD-RESISTING MEMBERS AND ASSEMBLIES IS BEING PERFORMED ON THE PREMISES OF A FABRICATOR'S SHOP, SPECIAL INSPECTION OF THE FABRICATED ITEMS SHALL BE REQUIRED IN ACCORDANCE WITH SECTION 1704.2 OF THE 2018 INTERNATIONAL BUILDING CODE AND AS REQUIRED ELSEWHERE IN THE CODE. (EXCEPT WHERE THE FABRICATOR IS APPROVED IN ACCORDANCE WITH SECTION 1704.2.2)

SUCH SPECIAL INSPECTIONS SHALL BE PERFORMED BY A PROFESSIONAL ENGINEER OR AN EMPLOYEE OF AN APPROVED TESTING AGENCY.

INSPECTION OF STRUCTURAL STEEL CONSTRUCTION:

SPECIAL INSPECTIONS AND NON-DESTRUCTIVE TESTING OF STRUCTURAL STEEL ELEMENTS IN BUILDINGS, STRUCTURES, AND PORTIONS THEREOF SHALL BE IN ACCORDANCE WITH THE QUALITY ASSURANCE INSPECTION REQUIREMENTS OF AISC 360. (NOTE: ALL FIELD WELDS SHALL BE INSPECTED BY AN AWS CERTIFIED WELDING INSPECTOR.)

WELDING INSPECTION AND SPECIAL INSPECTOR QUALIFICATION FOR STRUCTURAL STEEL SHALL BE IN COMPLIANCE WITH AWS D1.1.

INSPECTION OF COLD-FORMED STEEL DECK:

SPECIAL INSPECTIONS AND THE QUALIFICATION OF THE SPECIAL INSPECTOR(S) FOR COLD-FORMED STEEL FLOOR AND ROOF DECK SHALL BE IN ACCORDANCE WITH THE QUALITY ASSURANCE INSPECTION REQUIREMENTS OF SDI QA/QC.

WELDING INSPECTION AND SPECIAL INSPECTOR QUALIFICATION FOR COLD-FORMED STEEL FLOOR AND ROOF DECKS SHALL BE IN COMPLIANCE WITH AWS D1.3.

INSPECTION OF OPEN-WEB STEEL JOISTS AND JOIST GIRDERS:

SPECIAL INSPECTIONS OF OPEN-WEB STEEL JOISTS AND JOIST GIRDERS IN BUILDINGS, STRUCTURES AND PORTIONS THEREOF SHALL BE IN ACCORDANCE WITH TABLE 1705.2.3

INSPECTION OF CONCRETE CONSTRUCTION:

SPECIAL INSPECTIONS AND TESTS OF CONCRETE CONSTRUCTION SHALL BE PERFORMED IN ACCORDANCE WITH SECTION 1705.3 OF THE 2015 INTERNATIONAL BUILDING CODE AND WITH TABLE 1705.3.

IN THE ABSENCE OF SUFFICIENT DATA OR DOCUMENTATION PROVIDING EVIDENCE OF CONFORMANCE TO QUALITY STANDARDS FOR MATERIALS IN CHAPTER 19 AND 20 OF ACI 318, THE BUILDING OFFICIAL SHALL REQUIRE TESTING OF MATERIALS IN ACCORDANCE WITH THE APPROPRIATE STANDARDS AND CRITERIA FOR THE MATERIAL IN CHAPTERS 19 AND 20 OF ACI 318

WELDING INSPECTION AND SPECIAL INSPECTOR QUALIFICATION FOR REINFORCING STEEL SHALL BE IN COMPLIANCE WITH AWS D1.4 AND ACI 318.

INSPECTION OF MASONRY CONSTRUCTION:

SPECIAL INSPECTIONS AND TESTS OF MASONRY CONSTRUCTION SHALL BE PERFORMED IN ACCORDANCE WITH THE QUALITY ASSURANCE PROGRAM REQUIREMENTS OF TMS 402/ACI 530/ASCE 5 AND TMS 602/ACI 530.1/ASCE 6

INSPECTION OF SOILS:

SPECIAL INSPECTIONS AND TESTS OF EXISTING SITE SOIL CONDITIONS, FILL PLACEMENT, AND LOAD-BEARING REQUIREMENTS SHALL BE PERFORMED IN ACCORDANCE WITH SECTION 1705.6 OF THE 2018 INTERNATIONAL BUILDING CODE AND TABLE 1705.6. THE APPROVED GEOTECHNICAL REPORT AND THE CONSTRUCTION DOCUMENTS PREPARED BY THE REGISTERED DESIGN PROFESSIONALS SHALL BE USED TO DETERMINE COMPLIANCE. DURING FILL PLACEMENT, THE SPECIAL INSPECTOR SHALL VERIFY THAT PROPER MATERIALS AND PROCEDURES ARE USED IN ACCORDANCE WITH THE PROVISIONS OF THE APPROVED GEOTECHNICAL REPORT.

STATEMENT OF RESPONSIBILITY:

EACH CONTRACTOR RESPONSIBLE FOR THE CONSTRUCTION, FABRICATION, OR INSTALLATION OF A MAIN WIND OR SEISMIC FORCE-RESISTING SYSTEM OR A WIND OR SEISMIC FORCE-RESISTING COMPONENT LISTED IN THE STATEMENT OF SPECIAL INSPECTIONS SHALL SUBMIT A WRITTEN STATEMENT OF RESPONSIBILITY TO THE AUTHORITY HAVING JURISDICTION, THE RESPONSIBLE DESIGN PROFESSIONAL AND THE OWNER PRIOR TO THE COMMENCEMENT OF WORK ON THE SYSTEM OR COMPONENT. THE CONTRACTOR'S STATEMENT OF RESPONSIBILITY SHALL CONTAIN THE FOLLOWING:

A. ACKNOWLEDGEMENT OF AWARENESS OF THE SPECIAL REQUIREMENTS CONTAINED IN THE STATEMENT OF SPECIAL INSPECTIONS.

B. ACKNOWLEDGEMENT THAT CONTROL WILL BE EXERCISED TO OBTAIN COMPLIANCE WITH THE CONSTRUCTION DOCUMENTS.

C. PROCEDURES FOR EXERCISING CONTROL WITHIN THE CONTRACTOR'S ORGANIZATION, THE METHOD AND FREQUENCY OF REPORTING, AND THE DISTRIBUTION OF REPORTS.

D. IDENTIFICATION AND QUALIFICATIONS OF THE PERSON(S) EXERCISING SUCH CONTROL AND THEIR POSITION(S) IN THE ORGANIZATION.

REQUIRED VERIFICATIONS AND SPECIAL INSPECTIONS FOR STEEL CONSTRUCTION (BOLTING)

CHECK IF REQUIRED — CHECK IF REQUIRED — CHECK IF REQUIRED

	VERIFICATION AND INSPECTION	CONTINUOUS	PERIODIC
☑	1. INSPECTION PRIOR TO BOLTING (AISC 360-10):		
	A. VERIFY IDENTIFICATION MARKINGS CONFORM TO ASTM STANDARDS SPECIFIED IN THE APPROVED CONSTRUCTION DOCUMENTS.		QC & QA
	B. MANUFACTURER'S CERTIFICATIONS AVAILABLE FOR FASTENER MATERIALS	QA	QC
	C. FASTENERS MARKED IN ACCORDANCE WITH ASTM REQUIREMENTS		QC & QA
	D. PROPER FASTENERS SELECTED FOR THE JOINT DETAIL (GRADE, TYPE, BOLT LENGTH IF THREADS ARE TO BE EXCLUDED FROM SHEAR PLANE)		QC & QA
	E. PROPER BOLTING PROCEDURE SELECTED FOR JOINT DETAIL		QC & QA
	F. CONNECTING ELEMENTS, INCLUDING THE APPROPRIATE FAYING SURFACE CONDITION AND HOLE PREPARATION, IF SPECIFIED, MEET APPLICABLE REQUIREMENTS		QC & QA
	G. PRE-INSTALLATION VERIFICATION TESTING BY INSTALLATION PERSONNEL OBSERVED AND DOCUMENTED FOR FASTENER ASSEMBLIES AND METHODS USED	QC	QA
	H. PROPER STORAGE PROVIDED FOR BOLTS, NUTS, WASHERS, AND OTHER FASTENER COMPONENTS		QC & QA
☑	2. INSPECTION DURING BOLTING (AISC 360-10):		
	A. FASTENER ASSEMBLIES, OF SUITABLE CONDITION, PLACED IN ALL HOLES AND WASHERS (IF REQUIRED) ARE POSITIONED AS REQUIRED		QC & QA
	B. SNUG-TIGHT JOINTS AND JOINTS BROUGHT TO THE SNUG- TIGHT CONDITION PRIOR TO THE PRESTRESSING OPERATION		QC & QA
	C. FASTENER COMPONENT NOT TURNED BY THE WRENCH PREVENTED FROM ROTATING		QC & QA
	D. FASTENERS ARE PRETENSIONED IN ACCORDANCE WITH THE RCSC SPECIFICATION, PROGRESSING SYSTEMATICALLY FROM THE MOST RIGID POINT TOWARD THE FREE EDGES		QC & QA
	E. PRETENSIONED AND SLIP-CRITICAL JOINTS USING TURN-OF-NUT WITH MATCHMARKING, TWIST-OFF BOLT, OR DIRECT TENSION INDICATOR METHODS OF INSTALLATION		QC & QA
	F. PRETENSIONED AND SLIP-CRITICAL JOINTS USING TURN-OF-NUT WITHOUT MATCHMARKING OR CALIBRATED WRENCH METHODS OF INSTALLATION	QC & QA	
☑	3. INSPECTION AFTER BOLTING (AISC 360-10):		
	A. DOCUMENT ACCEPTANCE OR REJECTION OF BOLTED CONNECTIONS	QC & QA	

TABLE 1705.3: REQUIRED SPECIAL INSPECTIONS AND TESTS OF CONCRETE CONSTRUCTION

CHECK IF REQUIRED — CHECK IF REQUIRED — CHECK IF REQUIRED

	VERIFICATION AND INSPECTION	CONTINUOUS	PERIODIC
☑	1. INSPECT REINFORCEMENT, INCLUDING PRESTRESSING TENDONS, AND VERIFY PLACEMENT		✖
☑	2. REINFORCING BAR WELDING:		
	A. VERIFY WELDABILITY OF REINFORCING BARS OTHER THAN ASTM A706		✖
	B. INSPECT SINGLE-PASS FILLET WELDS, MAX. $\frac{5}{16}$"; AND		✖
	C. INSPECT ALL OTHER WELDS	✖	
☑	3. INSPECT ANCHORS CAST IN CONCRETE		✖
☑	4. INSPECT ANCHORS POST-INSTALLED IN HARDENED CONCRETE MEMBERS		
	A. ADHESIVE ANCHORS INSTALLED IN HORIZONTALLY OR UPWARDLY INCLINED ORIENTATIONS TO RESIST SUSTAINED TENSION LOADS	✖	
	B. MECHANICAL ANCHORS AND ADHESIVE ANCHORS NOT DEFINED IN 4.A.		✖
☑	5. VERIFY USE OF REQUIRED DESIGN MIX		✖
☑	6. PRIOR TO CONCRETE PLACEMENT, FABRICATE SPECIMENS FOR STRENGTH TESTS, PERFORM SLUMP AND AIR CONTENT TESTS, AND DETERMINE THE TEMPERATURE OF THE CONCRETE	✖	
☑	7. INSPECT CONCRETE AND SHOTCRETE PLACEMENT FOR PROPER APPLICATION TECHNIQUES	✖	
☑	8. VERIFY MAINTENANCE OF SPECIFIED CURING TEMPERATURE AND TECHNIQUES		✖
☐	9. INSPECT PRESTRESSED CONCRETE FOR:		
	A. APPLICATION OF PRESTRESSING FORCES; AND	✖	
	B. GROUTING OF BONDED PRESTRESSING TENDONS	✖	
☐	10. INSPECT ERECTION OF PRECAST CONCRETE MEMBERS		✖
☐	11. VERIFY IN-SITU CONCRETE STRENGTH, PRIOR TO STRESSING OF TENDONS IN POST-TENSIONED CONCRETE AND PRIOR TO REMOVAL OF SHORES AND FORMS FROM BEAMS AND STRUCTURAL SLABS		✖
☑	12. INSPECT FORMWORK FOR SHAPE, LOCATION, AND DIMENSIONS OF THE CONCRETE MEMBER BEING FORMED		✖

REQUIRED VERIFICATIONS AND SPECIAL INSPECTIONS FOR MASONRY CONSTRUCTION

CHECK IF REQUIRED

	VERIFICATION AND INSPECTION	CONTINUOUS	PERIODIC
☑	1. VERIFY COMPLIANCE WITH THE APPROVED SUBMITTALS.		✖
☑	2. VERIFY THAT THE FOLLOWING ARE IN COMPLIANCE:		
	A. PROPORTIONS OF SITE-PREPARED MORTAR, GROUT, AND PRESTRESSING GROUT FOR BONDED TENDONS		✖
	B. GRADE, TYPE, AND SIZE OF REINFORCEMENT AND ANCHOR BOLTS, AND PRESTRESSING TENDONS AND ANCHORAGES		✖
	C. PLACEMENT OF MASONRY UNITS AND CONSTRUCTION OF MORTAR JOINTS		✖
	D. PLACEMENT OF REINFORCEMENT, CONNECTORS, AND PRESTRESSING TENDONS AND ANCHORAGES	✖	
	E. GROUT SPACE PRIOR TO GROUTING	✖	
	F. PLACEMENT OF GROUT AND PRESTRESSING GROUT FOR BONDED TENDONS	✖	
	G. SIZE AND LOCATION OF STRUCTURAL ELEMENTS		✖
	H. TYPE, SIZE, AND LOCATION OF ANCHORS INCLUDING OTHER DETAILS OF ANCHORAGE OF MASONRY TO STRUCTURAL MEMBERS, FRAMES, OR OTHER CONSTRUCTION	✖	
	I. WELDING OF REINFORCEMENT	✖	
	J. PREPARATION, CONSTRUCTION, AND PROTECTION OF MASONRY DURING COLD WEATHER (TEMPERATURE BELOW 40°F (4.4°C)) OR HOT WEATHER (TEMPERATURE ABOVE 90°F (32.2°C))		✖
	K. APPLICATION AND MEASUREMENT OF PRESTRESSING FORCE	✖	
	L. PLACEMENT OF AAC MASONRY UNITS AND CONSTRUCTION OF THIN-BED MORTAR JOINTS	✖	
	M. PROPERTIES OF THIN-BED MORTAR FOR AAC MASONRY	✖	
☑	3. OBSERVE PREPARATION OF GROUT SPECIMINS, MORTAR SPECIMENS, AND/OR PRISMS	✖	
☑	VERIFICATION OF f'_m AND f'_{aac} IN ACCORDANCE WITH SPECIFICATION ARTICLE 1.4B PRIOR TO CONSTRUCTION AND FOR EVERY 5,000 SQ. FT. (465 SP. M) DURING CONSTRUCTION		
☑	VERIFICATION OF PROPORTIONS OF MATERIALS IN PREMIXED OR PREBLENDED MORTAR, PRESTRESSING GROUT, AND GROUT OTHER THAN SELF-CONSOLIDATING GROUT, AS DELIVERED TO THE PROJECT SITE		
☑	VERIFICATION OF SLUMP FLOW AND VISUAL STABILITY INDEX (VSI) AS DELIVERED TO THE PROJECT SITE IN ACCORDANCE WITH SPECIFICATION ARTICLE 1.5.B.1.b.3 FOR SELF-CONSOLIDATING GROUT		

REQUIRED VERIFICATIONS AND SPECIAL INSPECTIONS FOR STEEL CONSTRUCTION

CHECK IF REQUIRED

	VERIFICATION AND INSPECTION	CONTINUOUS	PERIODIC
☑	1. MATERIAL VERIFICATION OF STRUCTURAL STEEL AND COLD-FORMED STEEL DECK ELEMENTS:		
	A. FOR STRUCTURAL STEEL, IDENTIFICATION MARKINGS SHALL CONFORM TO AISC 360-10		✖
	B. FOR OTHER STEEL, IDENTIFICATION MARKINGS SHALL CONFORM TO ASTM STANDARDS SPECIFIED IN THE APPROVED CONSTRUCTION DOCUMENTS		✖
☐	2. INSPECTION OF STEEL ELEMENTS OF COMPOSITE CONSTRUCTION PRIOR TO CONCRETE PLACEMENT:		
	A. PLACEMENT AND INSTALLATION OF STEEL DECK	QC & QA	
	B. PLACEMENT AND INSTALLATION OF STEEL HEADED STUD ANCHORS	QC & QA	
	C. DOCUMENT ACCEPTANCE OR REJECTION OF STEEL ELEMENTS	QC & QA	

REQUIRED VERIFICATIONS AND SPECIAL INSPECTIONS FOR STEEL CONSTRUCTION (WELDING)

CHECK IF REQUIRED — CHECK IF REQUIRED — CHECK IF REQUIRED — CHECK IF REQUIRED

	VERIFICATION AND INSPECTION	CONTINUOUS	PERIODIC
☑	1. INSPECTION PRIOR TO WELDING (AISC 360-10):		
	A. VERIFY IDENTIFICATION MARKINGS OF WELD FILLER MATERIALS CONFORM TO AWS SPECIFICATION IN THE APPROVED CONSTRUCTION DOCUMENTS		✖
	B. WELDING PROCEDURE SPECIFICATIONS ARE AVAILABLE	QC & QA	
	C. MANUFACTURER CERTIFICATIONS FOR WELDING CONSUMABLES AVAILABLE	QC & QA	
	D. MATERIAL IDENTIFICATION (TYPE/GRADE) AND WELDER IDENTIFICATION SYSTEM		QC & QA
	E. FIT-UP OF WELDS INCLUDING BUT NOT LIMITED TO JOINT PREPARATION, DIMENSIONS, CLEANLINESS, TACKING, AND BACKING TYPE AND FIT AS APPLICABLE		QC & QA
	F. CONFIGURATION AND FINISH OF ACCESS HOLES		QC & QA
	G. CHECK WELDING EQUIPMENT		QC
☑	2. INSPECTION DURING WELDING (AISC 360-10):		
	A. USE OF QUALIFIED WELDERS		QC & QA
	B. PACKAGING AND EXPOSURE CONTROL AND HANDLING OF WELDING CONSUMABLES		QC & QA
	C. NO WELDING OVER CRACKED TACK WELDS		QC & QA
	D. ENVIRONMENTAL CONDITIONS INCLUDING BUT NOT LIMITED TO PRECIPITATION, TEMPERATURE, AND WIND SPEEDS WITHIN LIMITS		QC & QA
	E. VERIFY SETTINGS ON EQUIPMENT, TRAVEL SPEEDS, ELECTED MATERIALS, SHIELDING GAS TYPE/FLOW RATE, PREHEATING INTERPASS TEMPERATURES AND PROPER POSITION MEETS WPS STANDARDS		QC & QA
	F. VERIFY WELDING TECHNIQUES FOR INTERPASS, FINAL CLEANING, PROFILE LIMITATIONS, AND QUALITY REQUIREMENTS		QC & QA
☑	3. INSPECTION AFTER WELDING (AISC 360-10):		
	A. WELDS ARE CLEANED AND PAINTED WHERE REQUIRED		QC & QA
	B. VERIFY SIZE, LENGTH, AND LOCATIONS OF WELDS	QC & QA	
	C. VISUALLY VERIFY WELDS FOR CRACK PROHIBITION, WELD/BASE-METAL FUSION, CRATER CROSS SECTION, WELD PROFILES, WELD SIZE, UNDERCUTTING, AND POROSITY	QC & QA	
	D. ARC STRIKES, K-AREA CRACKS WITHIN 3" OF WELD, REMOVAL OF BACKING, AND REPAIR ACTIVITIES AS APPLICABLE	QC & QA	
	E. DOCUMENTATION OF ACCEPTANCE OR REJECTION OF WELDED JOINT OR MEMBER	QC & QA	
☑	4. REQUIREMENTS FOR STRUCTURAL STEEL AND COLD-FORMED STEEL DECK:		
	A. INSPECT COMPLETE AND PARTIAL JOINT PENETRATION GROOVE WELDS	✖	
	B. INSPECT MULTIPASS FILLET WELDS	✖	
	C. INSPECT SINGLE PASS FILLET WELDS > 5/16"	✖	
	D. INSPECT PLUG AND SLOT WELDS	✖	
	E. INSPECT SINGLE-PASS FILLET WELDS ≤ 5/16"		✖
	F. INSPECT FLOOR AND ROOF DECK WELDS		✖
	G. INSPECT WELDED STUDS AND DEFORMED BAR ANCHORS		✖
	H. INSPECT WELDED SHEET STEEL FOR COLD-FORMED STEEL MEMBERS		✖
	I. INSPECT WELDING OF STAIRS AND RAILING SYSTEMS		✖

TABLE 1705.2.3: REQUIRED SPECIAL INSPECTIONS OF OPEN-WEB STEEL JOISTS AND JOIST GIRDERS

CHECK IF REQUIRED

	VERIFICATION AND INSPECTION	CONTINUOUS	PERIODIC
☑	1. INSTALLATION OF OPEN-WEB STEEL JOISTS AND JOIST GIRDERS		
	A. END CONNECTIONS – WELDING OR BOLTED		✖
	B. BRIDGING – HORIZONTAL OR DIAGONAL		
	1. STANDARD BRIDGING		✖
	2. BRIDGING THAT DIFFERS FROM THE SJI SPECIFICATIONS LISTED IN SECTION 2207.1		✖

TABLE 1705.6: REQUIRED SPECIAL INSPECTIONS AND TESTS OF SOIL

CHECK IF REQUIRED

	VERIFICATION AND INSPECTION	CONTINUOUS	PERIODIC
☑	1. VERIFY MATERIALS BELOW SHALLOW FOUNDATIONS ARE ADEQUATE TO ACHIEVE THE DESIGN BEARING CAPACITY		✖
☑	2. VERIFY EXCAVATIONS ARE EXTENDED TO PROPER DEPTH AND HAVE REACHED PROPER MATERIAL		✖
☑	3. PERFORM CLASSIFICATION AND TESTING OF COMPACTED FILL MATERIALS		✖
☑	4. VERIFY USE OF PROPER MATERIALS, DENSITIES, AND LIFT THICKNESS DURING PLACEMENT AND COMPACTION OF COMPACTED FILL	✖	
☑	5. PRIOR TO PLACEMENT OF COMPACTED FILL, INSPECT SUBGRADE AND VERIFY THAT SITE HAS BEEN PREPARED PROPERLY		✖

ARCHITECTS IN PARTNERSHIP

ARCHITECTS
INTERIOR DESIGNERS
PLANNERS

3220 MARSHALL AVENUE
NORMAN, OK 73072
TEL: 405.360.1300
FAX: 405.360.1431

SEAL:

PROFESSIONAL STRUCTURAL ENGINEER — JAMES ALAN HORSMAN — 18879 — OKLAHOMA — REGISTERED

OK CERT. OF AUTH. NO. 4530
EXPIRATION 06/30/24
PROJECT NO. 22-027

HENNESSEY FIRE DEPARTMENT

REMODEL/ADDITION

HENNESSEY, OKLAHOMA

501 S. MAIN STREET

REVISIONS

REV.	DATE	DESCRIPTION

PROJ. MANAGER: NK
DRAWN BY: NK
CHECKED BY: RM

DATE: 08/08/2022
PROJECT NO.: 2111

SHEET TITLE: SPECIAL INSPECTIONS

SHEET NO.: S-102

Engineering Solutions, LLC
6801 North Broadway, Suite 215
Oklahoma City, OK 73116
Tel. (405) 848-4093

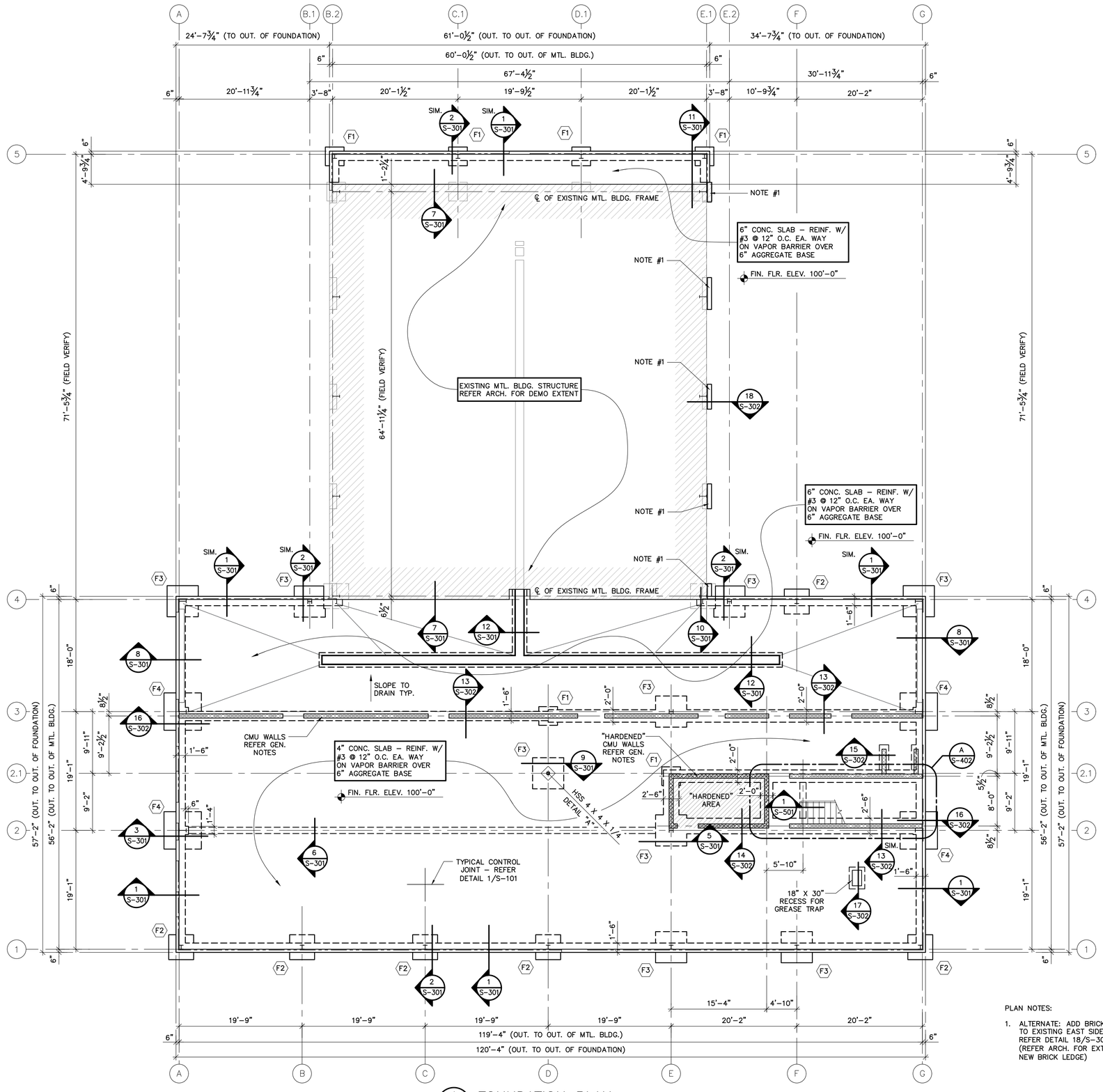

A S-201 FOUNDATION PLAN
SCALE: 1/8" = 1'-0"

PLAN NOTES:

1. ALTERNATE: ADD BRICK LEDGE TO EXISTING EAST SIDE. REFER DETAIL 18/S-302 (REFER ARCH. FOR EXTENT OF NEW BRICK LEDGE)

Engineering Solutions, LLC
6801 North Broadway, Suite 215
Oklahoma City, OK 73116
Tel. (405) 848-4093

ARCHITECTS IN PARTNERSHIP

ARCHITECTS
INTERIOR DESIGNERS
PLANNERS

3220 MARSHALL AVENUE
NORMAN, OK 73072
TEL: 405.360.1300
FAX: 405.360.1431

SEAL:
PROFESSIONAL STRUCTURAL ENGINEER
JAMES ALAN HOFFMAN
18879
OKLAHOMA

OK CERT. OF AUTH. NO. 4530
EXPIRATION 06/30/24
PROJECT NO. 22-027

HENNESSEY FIRE DEPARTMENT

REMODEL/ADDITION

501 S. MAIN STREET

HENNESSEY, OKLAHOMA

REVISIONS

REV.	DATE	DESCRIPTION

PROJ. MANAGER:	NK
DRAWN BY:	NK
CHECKED BY:	RM
DATE:	08/08/2022
PROJECT NO.:	2111
SHEET TITLE:	FOUNDATION PLAN
SHEET NO.:	S-201

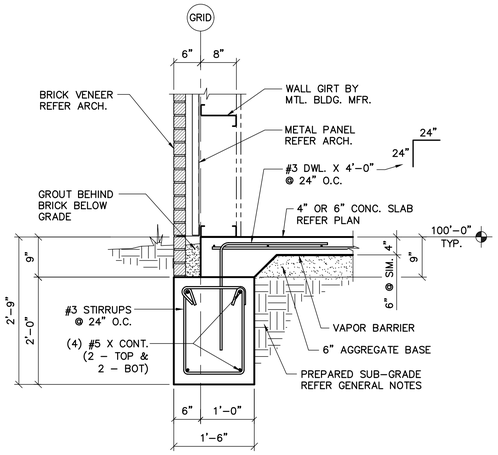

1 FOUNDATION DETAIL
SCALE: 3/4" = 1'-0"

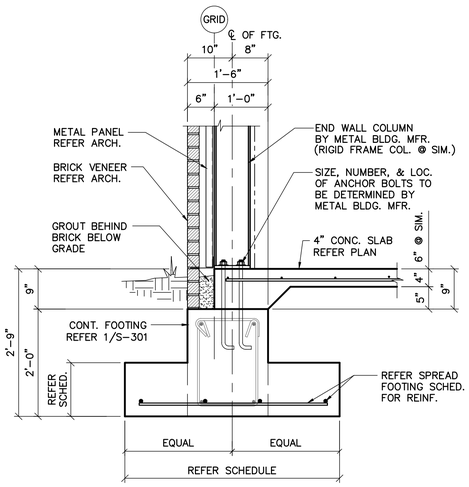

2 FOUNDATION DETAIL
SCALE: 3/4" = 1'-0"

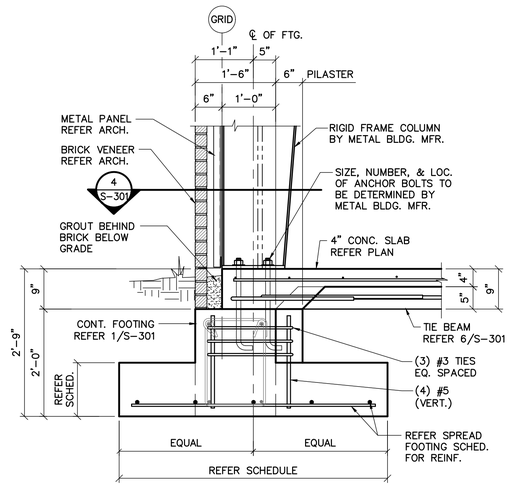

3 FOUNDATION DETAIL
SCALE: 3/4" = 1'-0"

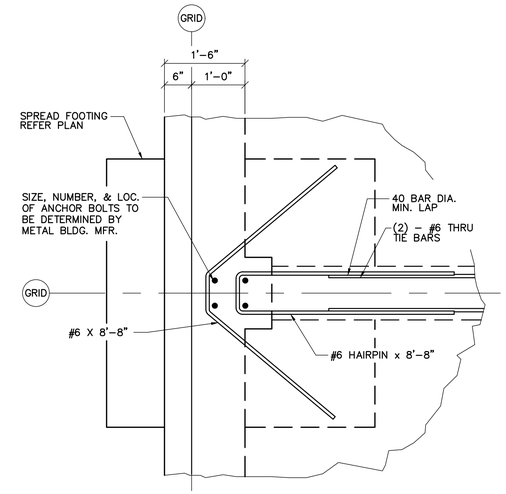

4 FOUNDATION DETAIL
SCALE: 3/4" = 1'-0"

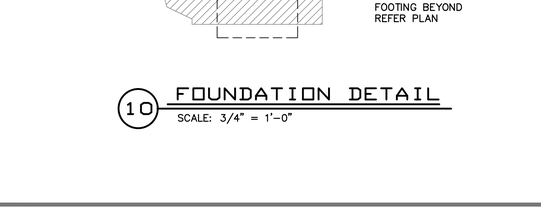

5 FOUNDATION DETAIL
SCALE: 3/4" = 1'-0"

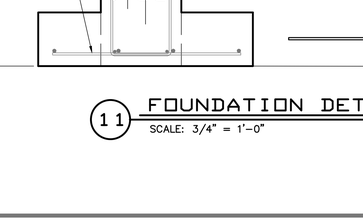

6 FOUNDATION DETAIL
SCALE: 3/4" = 1'-0"

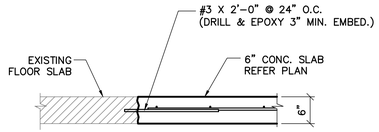

7 FOUNDATION DETAIL
SCALE: 3/4" = 1'-0"

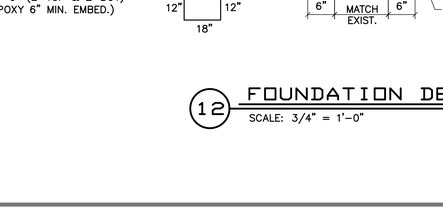

8 FOUNDATION DETAIL
SCALE: 3/4" = 1'-0"



9 FOUNDATION DETAIL
SCALE: 3/4" = 1'-0"

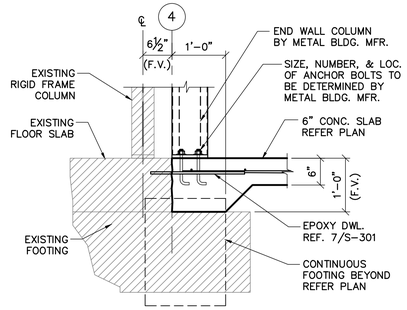

10 FOUNDATION DETAIL
SCALE: 3/4" = 1'-0"

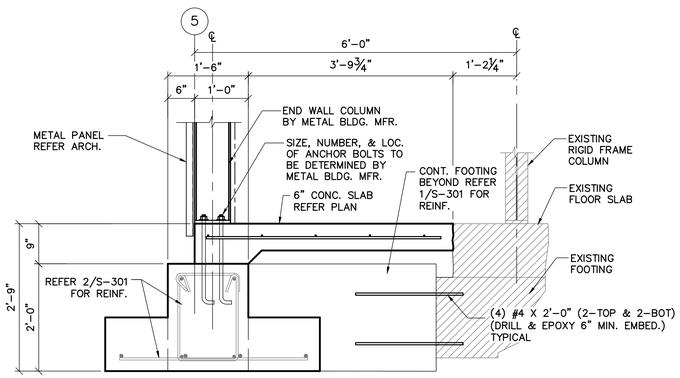

11 FOUNDATION DETAIL
SCALE: 3/4" = 1'-0"

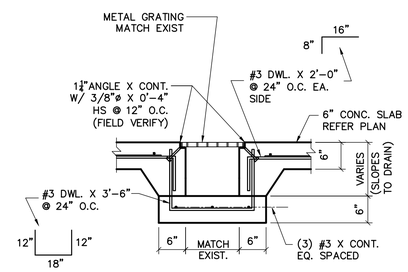

12 FOUNDATION DETAIL
SCALE: 3/4" = 1'-0"

Engineering Solutions, LLC
6801 North Broadway, Suite 215
Oklahoma City, OK 73116
Tel. (405) 848-4093

ARCHITECTS IN PARTNERSHIP

ARCHITECTS
INTERIOR DESIGNERS
PLANNERS

3220 MARSHALL AVENUE
NORMAN, OK 73072
TEL: 405.360.1300
FAX: 405.360.1431

SEAL:



OK CERT. OF AUTH. NO. 4530
EXPIRATION 06/30/24
PROJECT NO. 22-027

HENNESSEY FIRE DEPARTMENT

REMODEL/ADDITION

501 S. MAIN STREET

HENNESSEY, OKLAHOMA

REVISIONS

REV.	DATE	DESCRIPTION

PROJ. MANAGER:	NK
DRAWN BY:	NK
CHECKED BY:	RM
DATE:	08/08/2022
PROJECT NO.:	2111
SHEET TITLE:	FOUNDATION DETAILS
SHEET NO.:	S-301

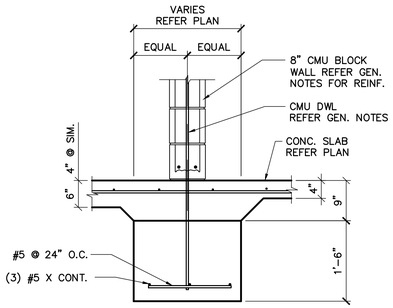

13 FOUNDATION DETAIL
SCALE: 3/4" = 1'-0"

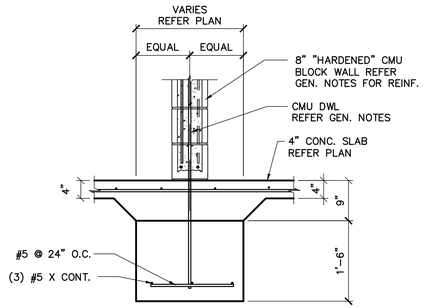

14 FOUNDATION DETAIL
SCALE: 3/4" = 1'-0"

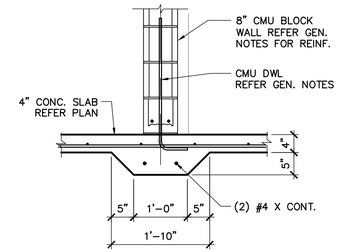

15 FOUNDATION DETAIL
SCALE: 3/4" = 1'-0"

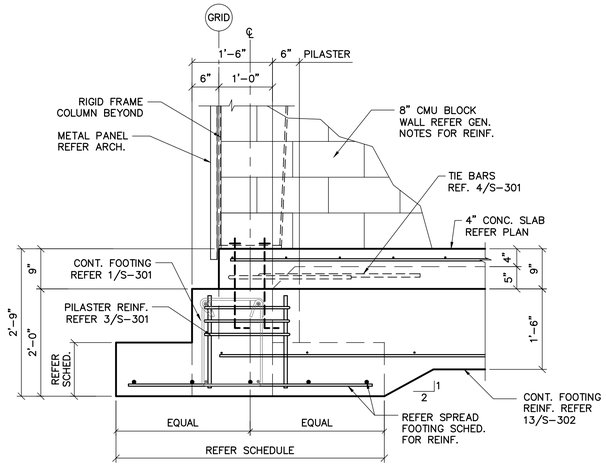

16 FOUNDATION DETAIL
SCALE: 3/4" = 1'-0"

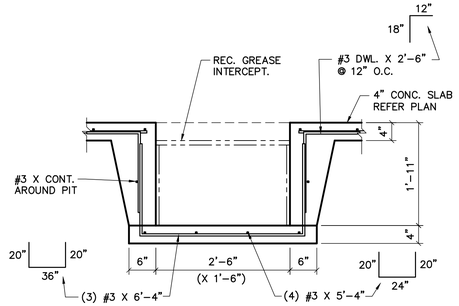

17 FOUNDATION DETAIL
SCALE: 3/4" = 1'-0"

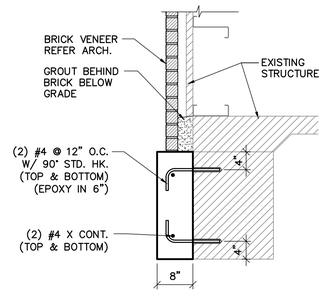

18 ALTERNATE FOUNDATION DETAIL
SCALE: 3/4" = 1'-0"

ARCHITECTS IN PARTNERSHIP

ARCHITECTS
INTERIOR DESIGNERS
PLANNERS

3220 MARSHALL AVENUE
NORMAN, OK 73072
TEL: 405.360.1300
FAX: 405.360.1431

SEAL:
PROFESSIONAL STRUCTURAL ENGINEER
JAMES ALAN HORMAN
18879
OKLAHOMA

OK CERT. OF AUTH. NO. 4530
EXPIRATION 06/30/24
PROJECT NO. 22-027

HENNESSEY FIRE DEPARTMENT
REMODEL/ADDITION
HENNESSEY, OKLAHOMA
501 S. MAIN STREET

REVISIONS

REV.	DATE	DESCRIPTION

PROJ. MANAGER: NK
DRAWN BY: NK
CHECKED BY: RM

DATE: 08/08/2022
PROJECT NO.: 2111

SHEET TITLE: FOUNDATION DETAILS
SHEET NO.: S-302

Engineering Solutions, LLC
6801 North Broadway, Suite 215
Oklahoma City, OK 73116
Tel. (405) 848-4093

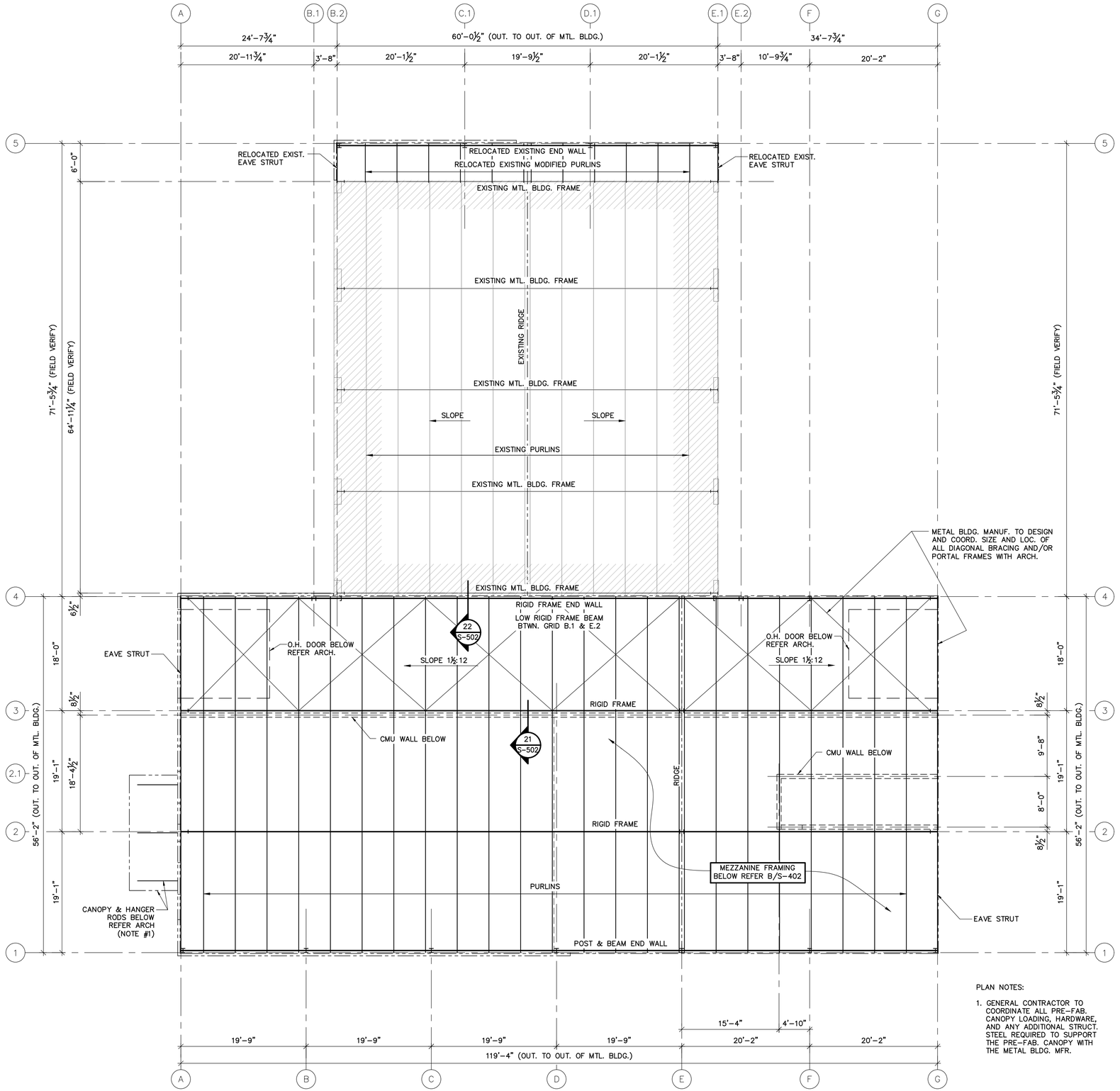

A S-401 ROOF FRAMING PLAN
SCALE: 1/8" = 1'-0"

PLAN NOTES:

1. GENERAL CONTRACTOR TO COORDINATE ALL PRE-FAB. CANOPY LOADING, HARDWARE, AND ANY ADDITIONAL STRUCT. STEEL REQUIRED TO SUPPORT THE PRE-FAB. CANOPY WITH THE METAL BLDG. MFR.

ARCHITECTS IN PARTNERSHIP

ARCHITECTS
INTERIOR DESIGNERS
PLANNERS

3220 MARSHALL AVENUE
NORMAN, OK 73072
TEL: 405.360.1300
FAX: 405.360.1431

SEAL:

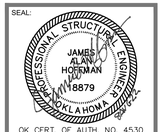

OK CERT. OF AUTH. NO. 4530
EXPIRATION 06/30/24
PROJECT NO. 22-027

HENNESSEY FIRE DEPARTMENT

REMODEL/ADDITION

HENNESSEY, OKLAHOMA

501 S. MAIN STREET

REVISIONS

REV.	DATE	DESCRIPTION

PROJ. MANAGER:	NK
DRAWN BY:	NK
CHECKED BY:	RM

DATE: 08/08/2022

PROJECT NO.: 2111

SHEET TITLE: ROOF FRAMING PLAN

SHEET NO.: S-401

Engineering Solutions, LLC
6801 North Broadway, Suite 215
Oklahoma City, OK 73116
Tel. (405) 848-4093

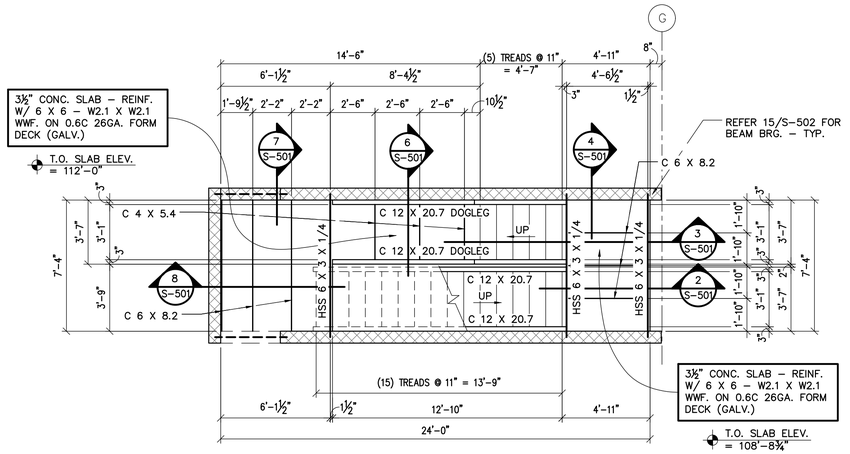

A S-402 **STAIR FRAMING PLAN**
SCALE: 1/4" = 1'-0"

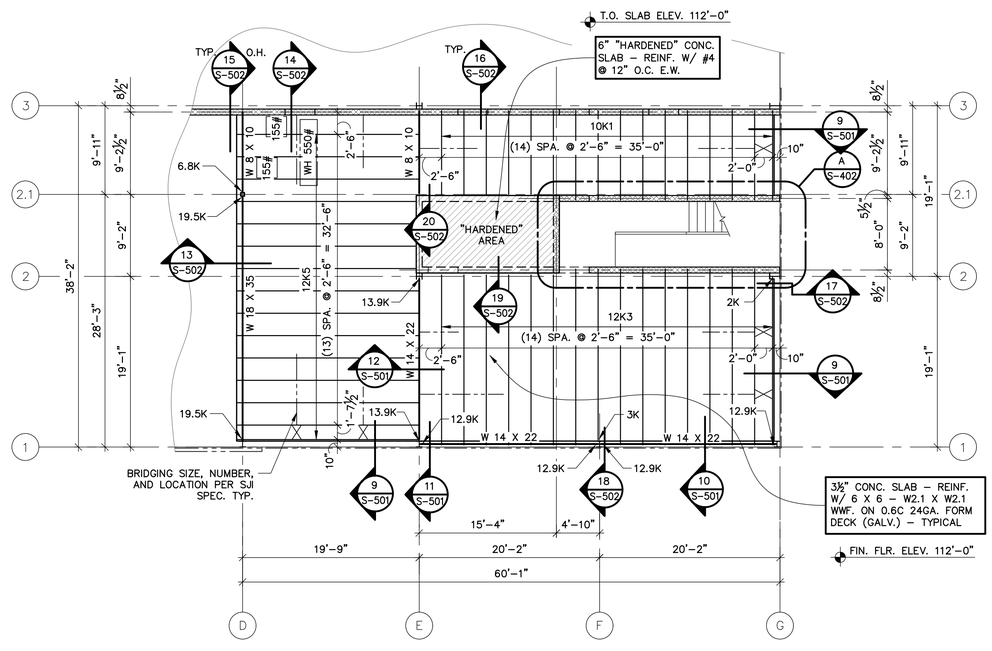

B S-402 **MEZZANINE FRAMING PLAN**
SCALE: 1/8" = 1'-0"

Engineering Solutions, LLC
6801 North Broadway, Suite 215
Oklahoma City, OK 73116
Tel. (405) 848-4093

ARCHITECTS IN PARTNERSHIP

ARCHITECTS
INTERIOR DESIGNERS
PLANNERS

3220 MARSHALL AVENUE
NORMAN, OK 73072
TEL: 405.360.1300
FAX: 405.360.1431

SEAL:
PROFESSIONAL STRUCTURAL ENGINEER
JAMES ALAN HORSMAN
18879
OKLAHOMA
OK CERT. OF AUTH. NO. 4530
EXPIRATION 06/30/24
PROJECT NO. 22-027

HENNESSEY FIRE DEPARTMENT
REMODEL/ADDITION
501 S. MAIN STREET
HENNESSEY, OKLAHOMA

REVISIONS

REV.	DATE	DESCRIPTION

PROJ. MANAGER:	NK
DRAWN BY:	NK
CHECKED BY:	RM
DATE:	08/08/2022
PROJECT NO.:	2111
SHEET TITLE:	STAIR & MEZZ. FRAMING PLAN
SHEET NO.:	S-402

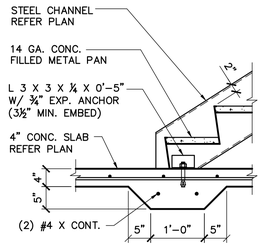

1 FRAMING DETAIL
SCALE: 3/4" = 1'-0"

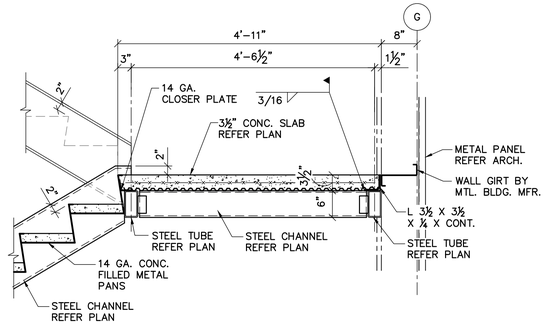

2 FRAMING DETAIL
SCALE: 3/4" = 1'-0"

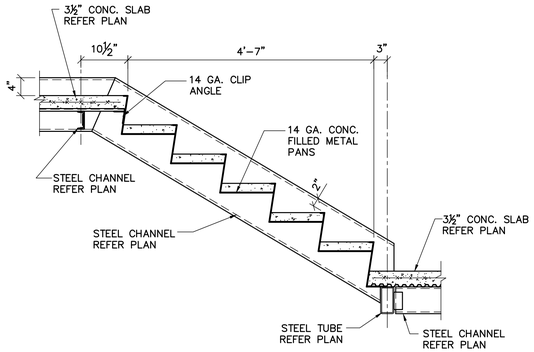

3 FRAMING DETAIL
SCALE: 3/4" = 1'-0"

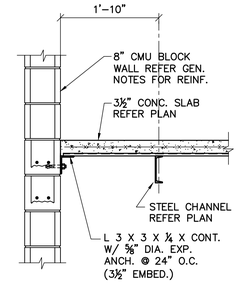

4 FRAMING DETAIL
SCALE: 3/4" = 1'-0"

NOT USED

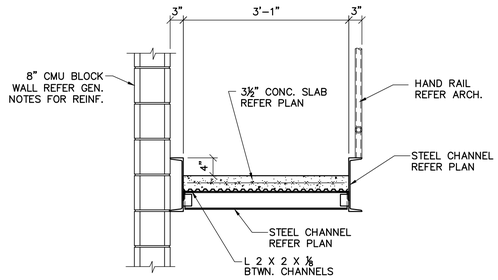

5 FRAMING DETAIL
SCALE: 3/4" = 1'-0"

6 FRAMING DETAIL
SCALE: 3/4" = 1'-0"

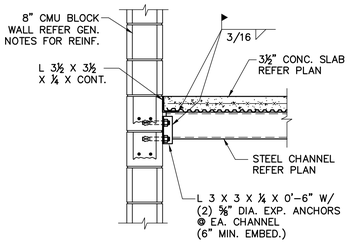

7 FRAMING DETAIL
SCALE: 3/4" = 1'-0"

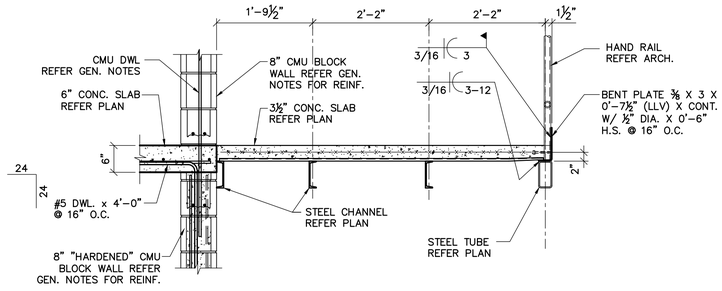

8 FRAMING DETAIL
SCALE: 3/4" = 1'-0"

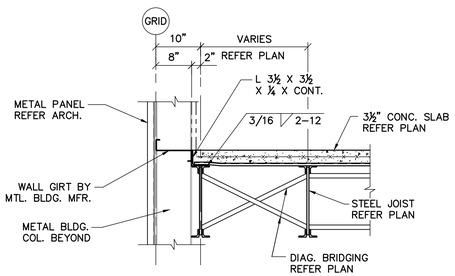

9 FRAMING DETAIL
SCALE: 3/4" = 1'-0"

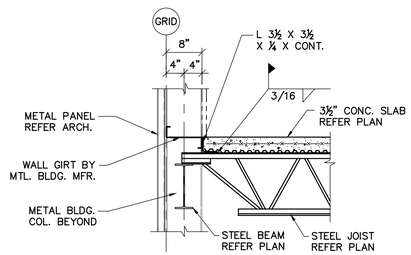

10 FRAMING DETAIL
SCALE: 3/4" = 1'-0"

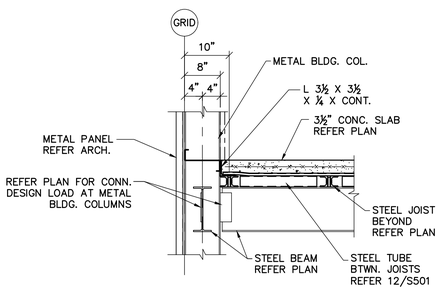

11 FRAMING DETAIL
SCALE: 3/4" = 1'-0"

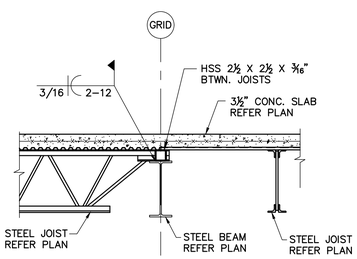

12 FRAMING DETAIL
SCALE: 3/4" = 1'-0"

Engineering Solutions, LLC
6801 North Broadway, Suite 215
Oklahoma City, OK 73116
Tel. (405) 848-4093

ARCHITECTS IN PARTNERSHIP

ARCHITECTS
INTERIOR DESIGNERS
PLANNERS

3220 MARSHALL AVENUE
NORMAN, OK 73072
TEL: 405.360.1300
FAX: 405.360.1431

SEAL:
JAMES ALAN HORSMAN 18879 — PROFESSIONAL STRUCTURAL ENGINEER — OKLAHOMA

OK CERT. OF AUTH. NO. 4530
EXPIRATION 06/30/24
PROJECT NO. 22-027

HENNESSEY FIRE DEPARTMENT
REMODEL/ADDITION
HENNESSEY, OKLAHOMA
501 S. MAIN STREET

REVISIONS

REV.	DATE	DESCRIPTION

PROJ. MANAGER:	NK
DRAWN BY:	NK
CHECKED BY:	RM
DATE:	08/08/2022
PROJECT NO.:	2111
SHEET TITLE:	FRAMING DETAILS
SHEET NO.:	S-501

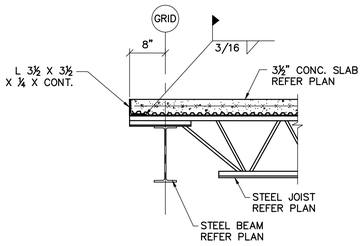

13 FRAMING DETAIL
SCALE: 3/4" = 1'-0"

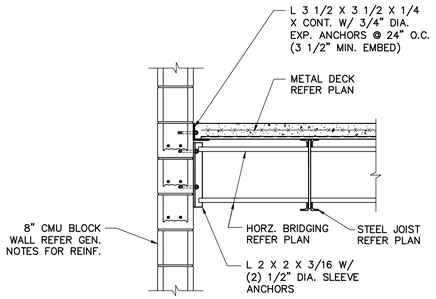

14 FRAMING DETAIL
SCALE: 3/4" = 1'-0"

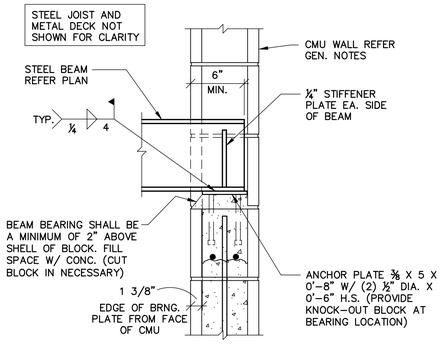

15 FRAMING DETAIL
SCALE: 1 1/2" = 1'-0"

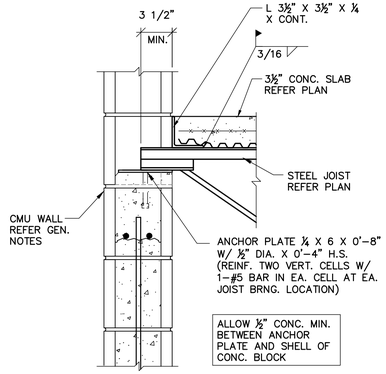

16 FRAMING DETAIL
SCALE: 1 1/2" = 1'-0"

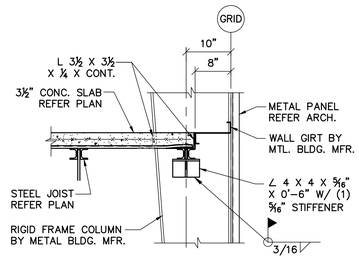

17 FRAMING DETAIL
SCALE: 3/4" = 1'-0"

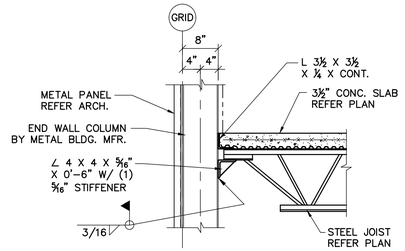

18 FRAMING DETAIL
SCALE: 3/4" = 1'-0"

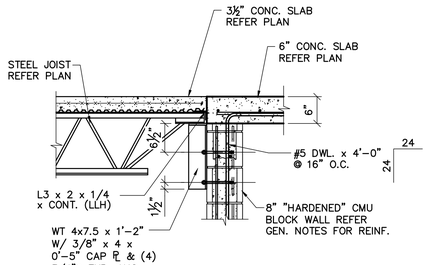

19 FRAMING DETAIL
SCALE: 3/4" = 1'-0"

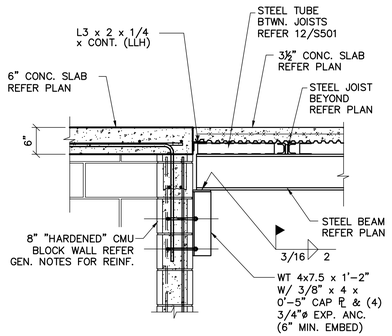

20 FRAMING DETAIL
SCALE: 3/4" = 1'-0"

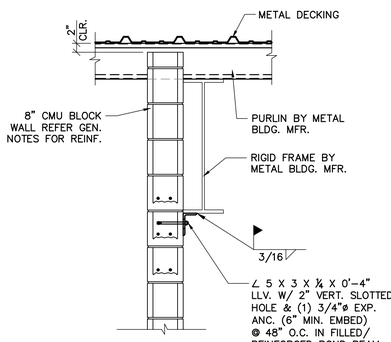

21 FRAMING DETAIL
SCALE: 3/4" = 1'-0"

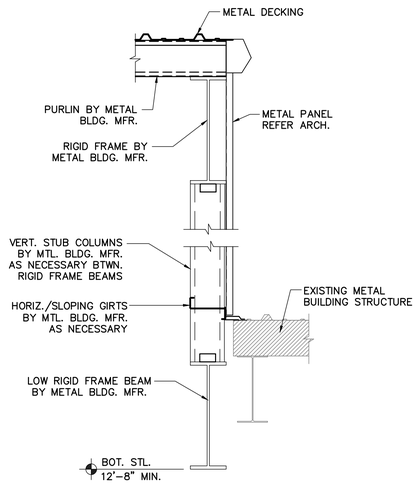

22 FRAMING DETAIL
SCALE: 3/4" = 1'-0"

ARCHITECTS IN PARTNERSHIP

ARCHITECTS
INTERIOR DESIGNERS
PLANNERS

3220 MARSHALL AVENUE
NORMAN, OK 73072
TEL: 405.360.1300
FAX: 405.360.1431

SEAL:
JAMES ALAN HORSMAN 18879 PROFESSIONAL STRUCTURAL ENGINEER OKLAHOMA

OK CERT. OF AUTH. NO. 4530
EXPIRATION 06/30/24
PROJECT NO. 22-027

HENNESSEY FIRE DEPARTMENT
REMODEL/ADDITION
HENNESSEY, OKLAHOMA
501 S. MAIN STREET

REVISIONS

REV.	DATE	DESCRIPTION

PROJ. MANAGER:	NK
DRAWN BY:	NK
CHECKED BY:	RM
DATE:	08/08/2022
PROJECT NO.:	2111
SHEET TITLE:	FRAMING DETAILS
SHEET NO.:	S-502

Engineering Solutions, LLC
6801 North Broadway, Suite 215
Oklahoma City, OK 73116
Tel. (405) 848-4093

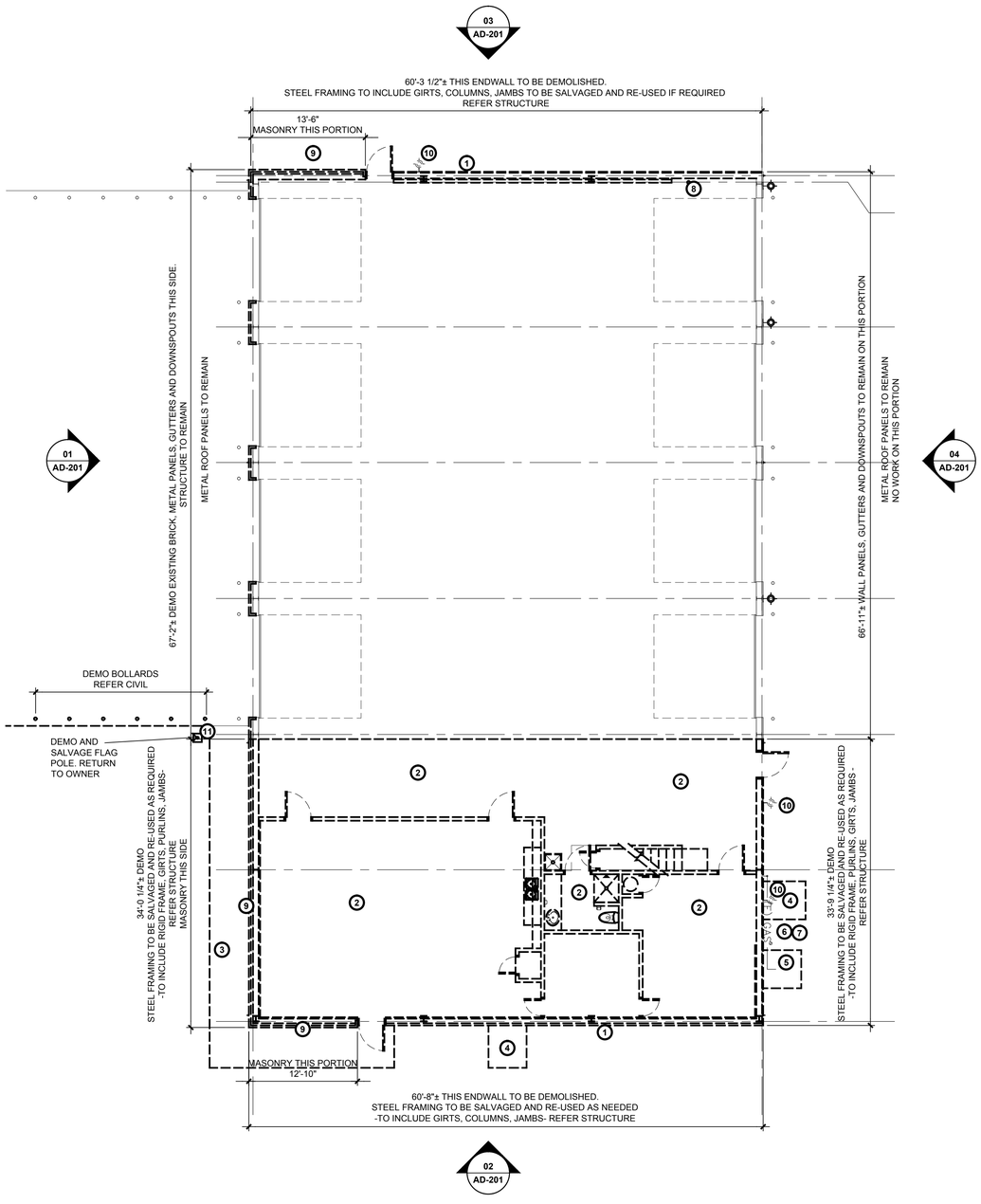

DEMOLITION
MAIN LEVEL FLOOR PLAN

01 SCALE: 1/8"=1'-0"

NORTH

GENERAL NOTES:

1. ALL STEEL TO BE SALVAGED AND RETURNED TO OWNER FOR RE-USE IN NEW ADDITIONS.
2. REFER TO AD-101 FLOOR PLAN FOR MORE DEMOLITION INFORMATION.
3. REFER TO STRUCTURE FOR MORE DEMOLITION INFORMATION.
4. REFER TO PLUMBING, MECHANICAL AND ELECTRICAL FOR MORE DEMOLITION INFORMATION.
5. REFER TO CIVIL FOR MORE DEMOLITION INFORMATION.

DEMOLITION KEY NOTES ⓧ :

1. REMOVE EXISTING END WALL FOR EXPANSION. SALVAGE COLUMNS FOR OWNER TO RE-USE. REFER STRUCTURE.
2. DEMOLISH SLAB AND BUILDING IN THIS AREA. SALVAGE PURLINS AND COLUMNS TO BE USED ON NEW CONSTRUCTION. REFER STRUCTURE.
3. DEMO EXISTING SIDEWALK.
4. DEMO EXISTING A/C UNIT.
5. SALVAGE EXISTING GENEARTOR-RETURN TO OWNER.
6. ELECTRICAL METER TO BE RELOCATED.
7. NATURAL GAS ENTRY TO BE RELOCATED.
8. WATER RISER TO BE RELOCATED.
9. DEMO BRICK FACADE.
10. DEMO EXTERIOR LIGHTS. SALVAGE FLOOD LIGHTS-RETURN TO OWNER.
11. RELOCATE FLAG POLE. REFER NEW SITE PLAN.

ALTERNATES :

1. DEMO EXISTING METAL WALL PANELS, REPLACE WITH NEW METAL WALL PANELS ON EAST SIDE. DEMO METAL ROOF AND GUTTER/DOWNSPOUTS EAST SIDE, REPLACE WITH NEW METAL ROOF PANELS, GUTTERS AND DOWNSPOUTS EAST SIDE.
2. ADD BRICK LEDGE TO EXISTING EAST SIDE.
3. ADD BRICK TO REMAINING BUILDING. PORTIONS OF NORTH AND SOUTH ELEVATIONS AND ALL OF EAST SIDE.

ARCHITECTS IN PARTNERSHIP

ARCHITECTS
INTERIOR DESIGNERS
PLANNERS

3220 MARSHALL AVENUE
NORMAN, OK 73072
TEL: 405.360.1300
FAX: 405.360.1431

SEAL:



08/08/2022

HENNESSEY FIRE DEPARTMENT
REMODEL/ADDITION

HENNESSEY, OKLAHOMA

501 S. MAIN STREET

REVISIONS

REV.	DATE	DESCRIPTION

PROJ. MANAGER: GL
DRAWN BY: STAFF
CHECKED BY: GL

DATE: 08/08/2022
PROJECT NO.: 2111

SHEET TITLE: DEMOLITION FLOOR PLAN
SHEET NO.: AD-101

8/8/2022 2:10:54 PM

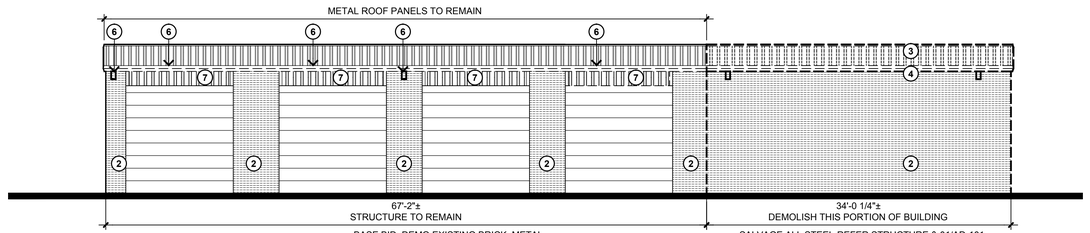

01 DEMO WEST ELEVATION

SCALE: 1/8"=1'-0" 01/AD-101

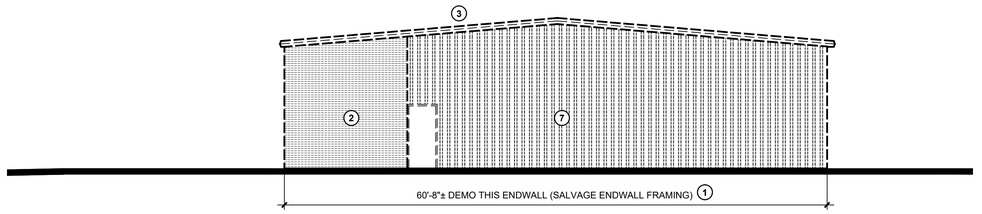

02 DEMO SOUTH ELEVATION

SCALE: 1/8"=1'-0" 01/AD-101

03 DEMO NORTH ELEVATION

SCALE: 1/8"=1'-0" 01/AD-101

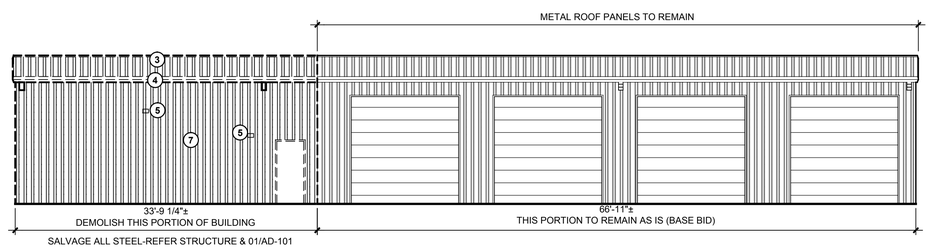

04 DEMO EAST ELEVATION

SCALE: 1/8"=1'-0" 01/AD-101

GENERAL NOTES:

1. REFER TO AD-101 FLOOR PLAN FOR MORE DEMOLITION INFORMATION.
2. REFER TO STRUCTURE FOR MORE DEMOLITION INFORMATION.
3. REFER TO PLUMBING, MECHANICAL AND ELECTRICAL FOR MORE DEMOLITION INFORMATION.
4. REFER TO CIVIL FOR MORE DEMOLITION INFORMATION.

DEMOLITION KEY NOTES ⓧ :

1. REMOVE EXISTING END WALL FOR EXPANSION. SALVAGE COLUMNS FOR OWNER TO RE-USE. REFER STRUCTURE.
2. DEMO BRICK FACADE AND METAL PANELS BEHIND BRICK VENEER.
3. DEMO EXISTING METAL ROOF AT NEW ADDITION. SALVAGE RIGID FRAME AND PURLINS FOR OWNER TO RE-USE AT NEW NORTH ENDWALL. REFER PLAN AD-101.
4. DEMO EXISTING GUTTER AT NEW ADDITION AND DOWNSPOUTS.
5. DEMO EXTERIOR LIGHTS. SALVAGE FLOOD LIGHTS-RETURN TO OWNER.
6. DEMO EXISTING GUTTER AND DOWNSPOUTS THIS SIDE ONLY.
7. DEMO EXISTING METAL WALL PANELS

ALTERNATES :

1. DEMO EXISTING METAL WALL PANELS, REPLACE WITH NEW METAL WALL PANELS ON EAST SIDE. DEMO METAL ROOF AND GUTTER/DOWNSPOUTS EAST SIDE, REPLACE WITH NEW METAL ROOF PANELS, GUTTERS AND DOWNSPOUTS EAST SIDE.
2. ADD BRICK LEDGE TO EXISTING EAST SIDE.
3. ADD BRICK TO REMAINING BUILDING. PORTIONS OF NORTH AND SOUTH ELEVATIONS AND ALL OF EAST SIDE.

ARCHITECTS IN PARTNERSHIP

ARCHITECTS
INTERIOR DESIGNERS
PLANNERS

3220 MARSHALL AVENUE
NORMAN, OK 73072
TEL: 405.360.1300
FAX: 405.360.1431

SEAL:

STATE OF OKLAHOMA GANG 4780 LICENSED ARCHITECT

08/08/2022

HENNESSEY FIRE DEPARTMENT

REMODEL/ADDITION

HENNESSEY, OKLAHOMA

501 S. MAIN STREET

REVISIONS

REV.	DATE	DESCRIPTION

PROJ. MANAGER: GL
DRAWN BY: STAFF
CHECKED BY: GL

DATE: 08/08/2022
PROJECT NO.: 2111

SHEET TITLE: DEMOLITION ELEVATIONS

SHEET NO.: AD-201

8/8/2022 2:11:04 PM

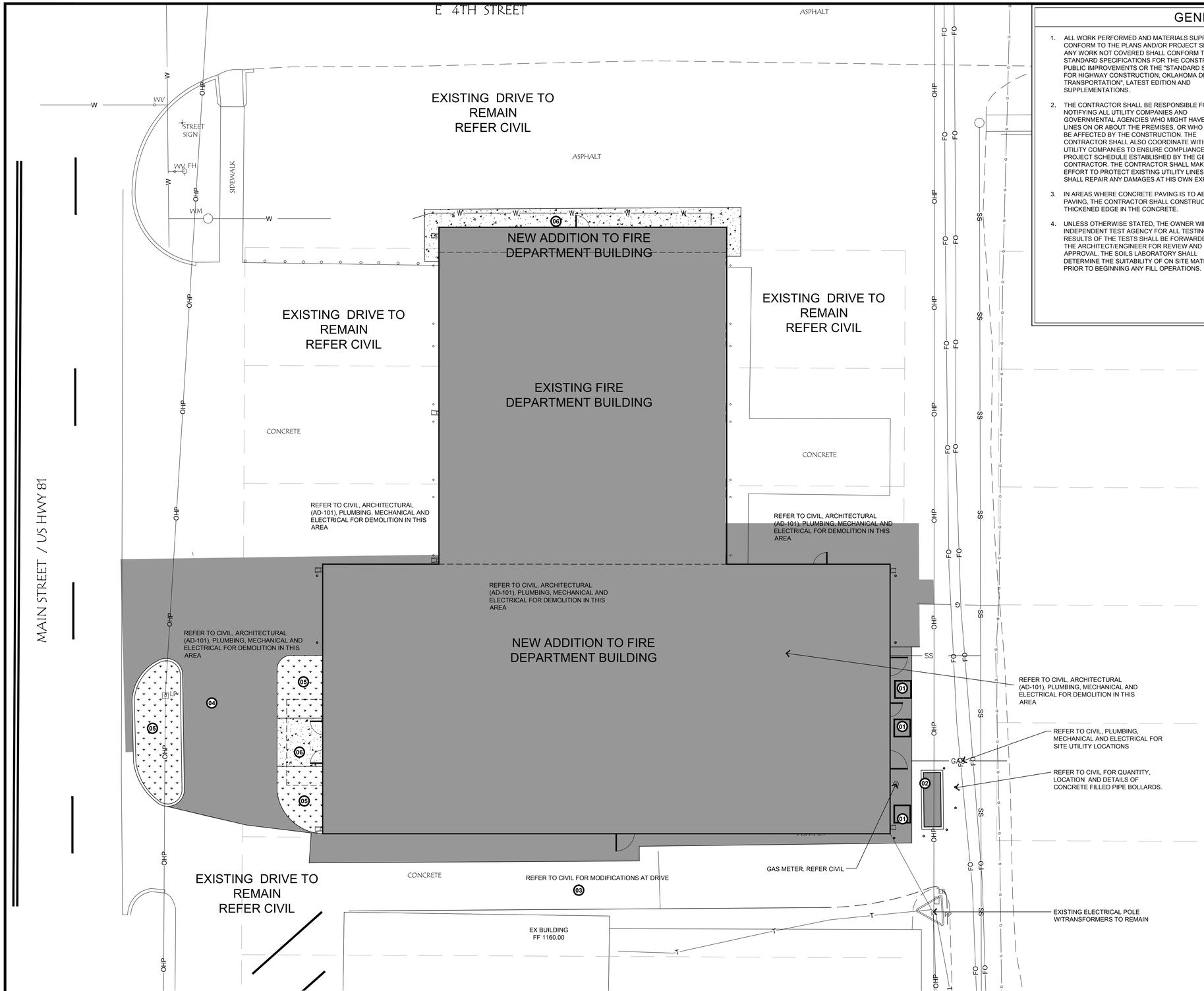

01 SITE PLAN
SCALE: 1"=10'-0"

GENERAL SITE PLAN NOTES

1. ALL WORK PERFORMED AND MATERIALS SUPPLIED SHALL CONFORM TO THE PLANS AND/OR PROJECT SPECIFICATIONS. ANY WORK NOT COVERED SHALL CONFORM TO THE CITY'S STANDARD SPECIFICATIONS FOR THE CONSTRUCTION OF PUBLIC IMPROVEMENTS OR THE "STANDARD SPECIFICATIONS FOR HIGHWAY CONSTRUCTION, OKLAHOMA DEPARTMENT OF TRANSPORTATION", LATEST EDITION AND SUPPLEMENTATIONS.
2. THE CONTRACTOR SHALL BE RESPONSIBLE FOR NOTIFYING ALL UTILITY COMPANIES AND GOVERNMENTAL AGENCIES WHO MIGHT HAVE UTILITY LINES ON OR ABOUT THE PREMISES, OR WHO MIGHT BE AFFECTED BY THE CONSTRUCTION. THE CONTRACTOR SHALL ALSO COORDINATE WITH THE UTILITY COMPANIES TO ENSURE COMPLIANCE TO THE PROJECT SCHEDULE ESTABLISHED BY THE GENERAL CONTRACTOR. THE CONTRACTOR SHALL MAKE EVERY EFFORT TO PROTECT EXISTING UTILITY LINES AND SHALL REPAIR ANY DAMAGES AT HIS OWN EXPENSE.
3. IN AREAS WHERE CONCRETE PAVING IS TO ABUT EXISTING PAVING, THE CONTRACTOR SHALL CONSTRUCT A 10" THICKENED EDGE IN THE CONCRETE.
4. UNLESS OTHERWISE STATED, THE OWNER WILL HIRE INDEPENDENT TEST AGENCY FOR ALL TESTING. THE RESULTS OF THE TESTS SHALL BE FORWARDED TO THE ARCHITECT/ENGINEER FOR REVIEW AND APPROVAL. THE SOILS LABORATORY SHALL DETERMINE THE SUITABILITY OF ON SITE MATERIAL PRIOR TO BEGINNING ANY FILL OPERATIONS.
5. UPON COMPLETION OF THE WORK, THE CONTRACTOR SHALL BE RESPONSIBLE FOR BACKFILLING BEHIND CURBS AND ALL AREAS TO BE LANDSCAPED WITH A MINIMUM 4" DEPTH OF TOPSOIL
6. THE CONTRACTOR SHALL BE RESPONSIBLE FOR ERECTING AND MAINTAINING BARRICADES AND OTHER TRAFFIC CONTROL DEVICES AS NECESSARY AROUND THE PERIMETER.
7. THE CONTRACTOR IS RESPONSIBLE FOR ENSURING THAT ALL SIDEWALKS AND ACCESSIBLE RAMPS ARE IN COMPLIANCE WITH THE ADAAG REGULATIONS. THE CONTRACTOR SHALL NOTIFY THE ARCHITECT OF ANY DISCREPANCIES BETWEEN THE DESIGN INFORMATION AND ADAAG REGULATIONS PRIOR TO CONSTRUCTION.
8. REFER TO CIVIL, MECHANICAL, PLUMBING AND ELECTRICAL DWGS FOR ALL SITE UTILITY CONNECTIONS
9. PROVIDE SECURITY FENCING AROUND ALL CONSTRUCTION OPERATION AND STORAGE AREAS.
10. WATER SHOULD NOT BE ALLOWED TO COLLECT NEAR THE FOUNDATION OR FLOOR SLAB AREA OF THE BUILDING OR PAVEMENT EITHER DURING OR AFTER CONSTRUCTION UNDERCUT OR EXCAVATED AREAS SHOULD BE SLOPED TOWARD ONE CORNER TO FACILITATE REMOVAL OF ANY COLLECTED RAINWATER, GROUNDWATER, OR SURFACE RUNOFF. ALL GRADES SHALL BE SLOPED AWAY FROM THE BUILDING AND SURFACE DRAINAGE SHALL BE COLLECTED AND DISCHARGED SUCH THAT WATER IS NOT TO INFILTRATE THE BACKFILL OF THE BUILDING.
11. SIDEWALKS SHALL NOT EXCEED A MAXIMUM SLOPE OF 1/20 IN THE DIRECTION OF TRAVEL, CROSS SLOPE SHALL NOT EXCEED 1/50

ALTERNATES :

1. DEMO EXISTING METAL WALL PANELS, REPLACE WITH NEW METAL WALL PANELS ON EAST SIDE. DEMO METAL ROOF AND GUTTER/DOWNSPOUTS EAST SIDE, REPLACE WITH NEW METAL ROOF PANELS, GUTTERS AND DOWNSPOUTS EAST SIDE.
2. ADD BRICK LEDGE TO EXISTING EAST SIDE.
3. ADD BRICK TO REMAINING BUILDING. PORTIONS OF NORTH AND SOUTH ELEVATIONS AND ALL OF EAST SIDE.

GENERAL NOTES :

1. REFER TO CIVIL FOR SITE DEMOLITION.
2. REFER TO CIVIL FOR EXTENTS OF NEW SITE WORK. SIDEWALKS, CURBS, PAVING, ETC.
3. REFER TO ARCHITECTURE AD-101 AND AD-201 FOR BUILDING DEMOLITION.

SITE PLAN KEY NOTES (X) :

1. NEW CONDENSERS-REFER MECHANICAL
2. NEW GENERATOR-REFER ELECTRICAL
3. EXISTING DRIVES-REFER CIVIL FOR ANY MODIFICATIONS REQUIRED
4. NEW DRIVE WITH CURBS-REFER CIVIL
5. NEW SOD AREAS. REFER CIVIL
6. NEW SIDEWALKS-REFER CIVIL

ARCHITECTS IN PARTNERSHIP

ARCHITECTS
INTERIOR DESIGNERS
PLANNERS

3220 MARSHALL AVENUE
NORMAN, OK 73072
TEL: 405.360.1300
FAX: 405.360.1431

SEAL:

STATE OF OKLAHOMA
GANG
4780
LICENSED ARCHITECT

08/08/2022

HENNESSEY FIRE DEPARTMENT
REMODEL/ADDITION

501 S. MAIN STREET
HENNESSEY, OKLAHOMA

REVISIONS

REV.	DATE	DESCRIPTION

PROJ. MANAGER: GL
DRAWN BY: STAFF
CHECKED BY: GL

DATE: 08/08/2022
PROJECT NO.: 2111

SHEET TITLE: SITE PLAN
SHEET NO.: A-001

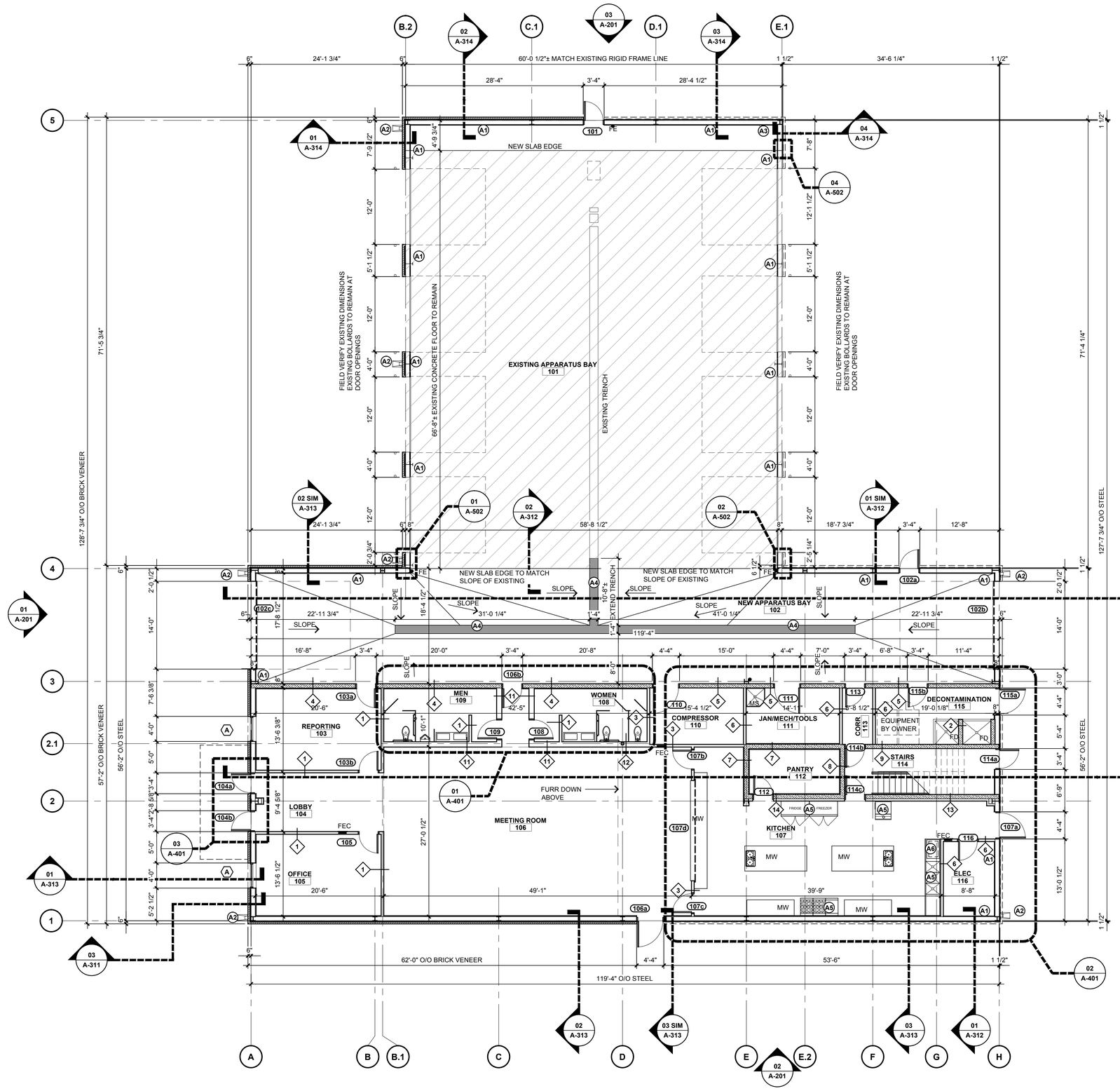

01 **MAIN LEVEL FLOOR PLAN**
SCALE: 1/8"=1'-0"

NORTH

NEW CONSTRUCTION KEY NOTES ⓧ :

A1. PRE-FINISHED METAL LINER PANEL
A2. PRE-FINISHED METAL DOWNSPOUT WITH CONC. SPLASH BLOCK.
A3. RELOCATED WATER RISER. REFER PLUMBING.
A4. EXTEND EXISTING TRENCH AT APPARATUS BAY 102. MAINTAIN POSITIVE DRAINAGE WITH EXISTING TRENCH. REFER STRUCTURE AND PLUMBING.
A5. KITCHEN EQUIPMENT OWNER FURNISHED AND CONTRACTOR TO INSTALL.
A6. GREASE INTERCEPTOR W/ ACCESS PANEL RECESSED IN FLOOR. REFER PLUMBING, STRUCTURE AND 02/A-401.

PLAN LEGEND:

DS	DOWNSPOUT, REFER PLUMBING
FD	FLOOR DRAIN - REF: PLUMBING
FEC	FIRE EXTINGUISHER CABINET
MS	MOP SINK - REF: PLUMBING
MW	BUILT-IN MILLWORK
	METAL STUD WALL
	CMU WALL
	BRICK-ALTERNATE #3.
	NEW FACE BRICK VENEER
	EXISTING BUILDING SLAB TO REMAIN

ALTERNATES :

1. DEMO EXISTING METAL WALL PANELS, REPLACE WITH NEW METAL WALL PANELS ON EAST SIDE. DEMO METAL ROOF AND GUTTER/DOWNSPOUTS EAST SIDE, REPLACE WITH NEW METAL ROOF PANELS, GUTTERS AND DOWNSPOUTS EAST SIDE.
2. ADD BRICK LEDGE TO EXISTING EAST SIDE.
3. ADD BRICK TO REMAINING BUILDING. PORTIONS OF NORTH AND SOUTH ELEVATIONS AND ALL OF EAST SIDE.

ARCHITECTS IN PARTNERSHIP

ARCHITECTS
INTERIOR DESIGNERS
PLANNERS

3220 MARSHALL AVENUE
NORMAN, OK 73072
TEL: 405.360.1300
FAX: 405.360.1431

SEAL:

STATE OF OKLAHOMA
GANG
4780
LICENSED ARCHITECT

08/08/2022

HENNESSEY FIRE DEPARTMENT
REMODEL/ADDITION
501 S. MAIN STREET
HENNESSEY, OKLAHOMA

REVISIONS

REV.	DATE	DESCRIPTION

PROJ. MANAGER: GL
DRAWN BY: STAFF
CHECKED BY: GL

DATE: 08/08/2022
PROJECT NO.: 2111

SHEET TITLE: MAIN LEVEL FLOOR PLAN
SHEET NO.: A-101

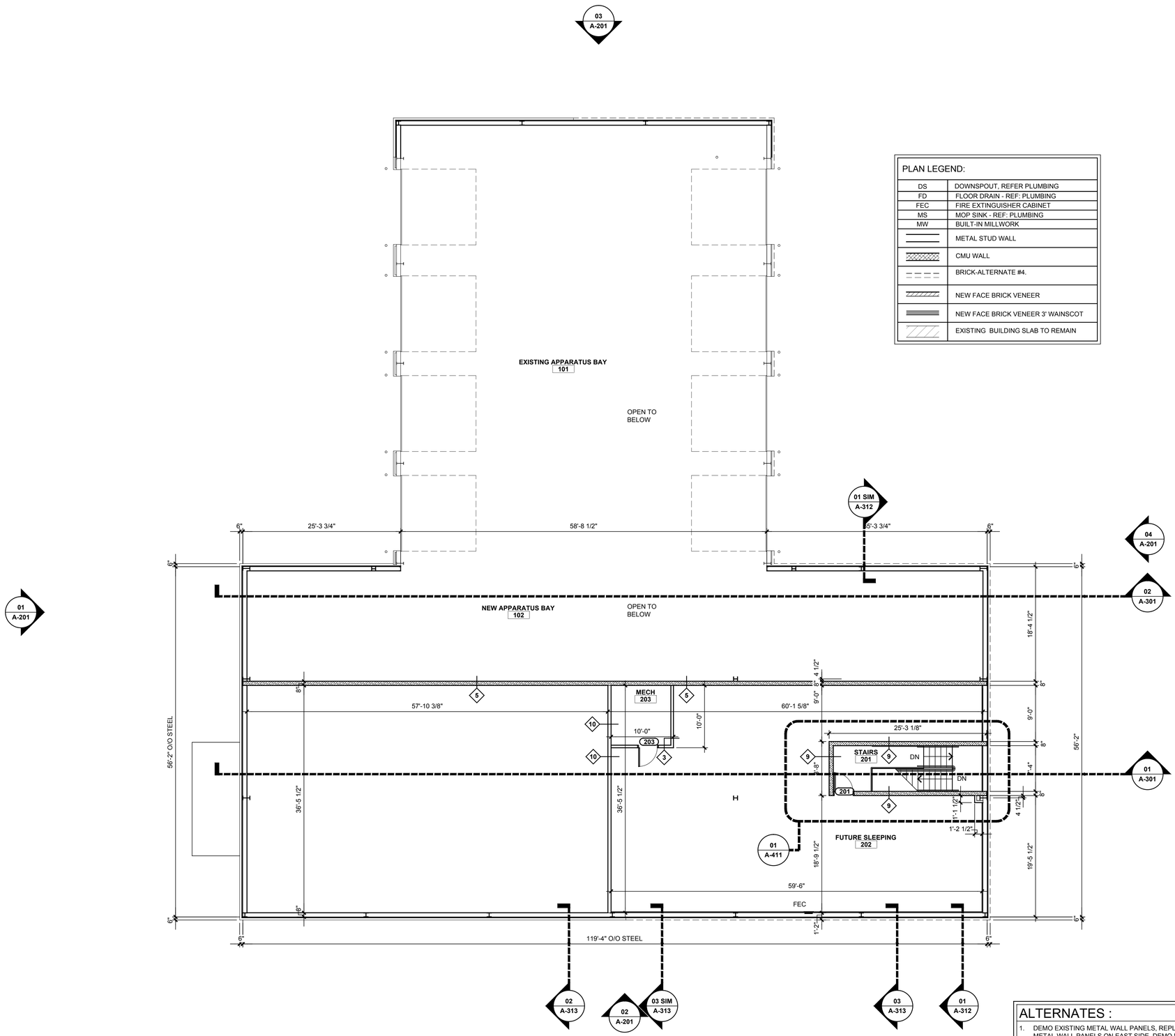

PLAN LEGEND:	
DS	DOWNSPOUT, REFER PLUMBING
FD	FLOOR DRAIN - REF: PLUMBING
FEC	FIRE EXTINGUISHER CABINET
MS	MOP SINK - REF: PLUMBING
MW	BUILT-IN MILLWORK
	METAL STUD WALL
	CMU WALL
	BRICK-ALTERNATE #4.
	NEW FACE BRICK VENEER
	NEW FACE BRICK VENEER 3' WAINSCOT
	EXISTING BUILDING SLAB TO REMAIN

01 SECOND LEVEL FLOOR PLAN

SCALE: 1/8"=1'-0"

NORTH

ALTERNATES :

1. DEMO EXISTING METAL WALL PANELS, REPLACE WITH NEW METAL WALL PANELS ON EAST SIDE. DEMO METAL ROOF AND GUTTER/DOWNSPOUTS EAST SIDE, REPLACE WITH NEW METAL ROOF PANELS, GUTTERS AND DOWNSPOUTS EAST SIDE.
2. ADD BRICK LEDGE TO EXISTING EAST SIDE.
3. ADD BRICK TO REMAINING BUILDING. PORTIONS OF NORTH AND SOUTH ELEVATIONS AND ALL OF EAST SIDE.

ARCHITECTS IN PARTNERSHIP

ARCHITECTS
INTERIOR DESIGNERS
PLANNERS

3220 MARSHALL AVENUE
NORMAN, OK 73072
TEL: 405.360.1300
FAX: 405.360.1431

SEAL:

STATE OF OKLAHOMA
GANG
4780
LICENSED ARCHITECT

08/08/2022

HENNESSEY FIRE DEPARTMENT

REMODEL/ADDITION

501 S. MAIN STREET

HENNESSEY, OKLAHOMA

REVISIONS

REV.	DATE	DESCRIPTION

PROJ. MANAGER: GL
DRAWN BY: STAFF
CHECKED BY: GL

DATE: 08/08/2022
PROJECT NO.: 2111

SHEET TITLE: SECOND LEVEL FLOOR PLAN

SHEET NO.: A-102

8/8/2022 2:05:33 PM

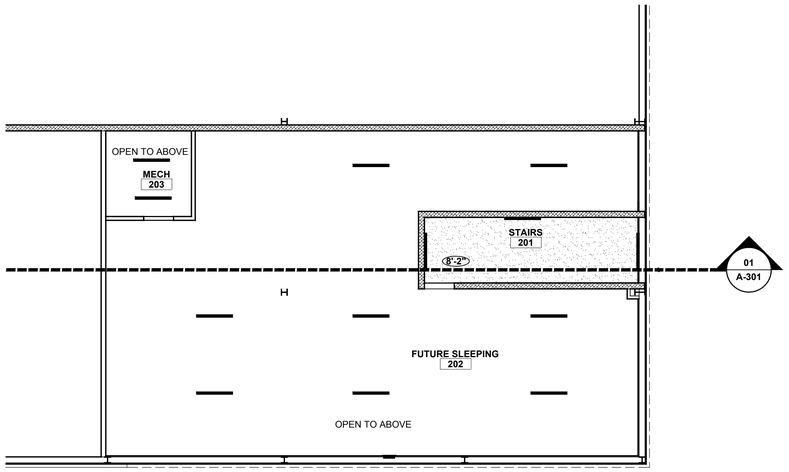

02 UPPER LEVEL CEILING PLAN

SCALE: 1/8"=1'-0"

NORTH

CEILING LEGEND:	
	2'-0" x 2'-0" ACOUSTICAL CEILING TILE AND GRID (ACT-1, ACG-1) - REF: SPECIFICATIONS
	MOISTURE RESISTANT GYP. BD. CEILING
	2'-0" x 2'-0" ACOUSTICAL VINYL FACED CEILING TILE AND GRID (ACT-2, ACG-1) - REF: SPECIFICATIONS
	CONCRETE LID. REFER STRUCTURE
	SUPPLY DIFFUSER - REF: MECHANICAL
	RETURN GRILLE - REF: MECHANICAL
	RECESSED DOWN LIGHT FIXTURE - REF: ELECTRICAL
	2'-0" x 2'-0" LIGHT FIXTURE (SURFACE MOUNT TYPE AT GYP. BD. CEILINGS) - REF: ELECTRICAL
	2'-0" x 2'-0" EMERGENCY LIGHT FIXTURE (SURFACE MOUNT TYPE AT GYP. BD. CEILINGS) - REF: ELECTRICAL
	LED WALL PACK - REF: ELECTRICAL
	EXIT LIGHT - REF: ELECTRICAL
	WALL MOUNTED VANITY LIGHT - REF: ELECTRICAL
	HI-BAY - REF: ELECTRICAL

CEILING KEY NOTES:	
1	TO BE PAINTED PT-3
2	TO BE PAINTED PT-2
3	

CEILING NOTES:

1. CEILING HEIGHT IS 9'-0" AFF, UNO.
2. ALL DIMENSIONS TO BE SITE VERIFIED
3. SEE A-101 FOR ROOM DIMENSIONS
4. SEE A-160 FOR FINISH AND COLOR SCHEDULES.

ALTERNATES :

1. DEMO EXISTING METAL WALL PANELS, REPLACE WITH NEW METAL WALL PANELS ON EAST SIDE. DEMO METAL ROOF AND GUTTER/DOWNSPOUTS EAST SIDE, REPLACE WITH NEW METAL ROOF PANELS, GUTTERS AND DOWNSPOUTS EAST SIDE.
2. ADD BRICK LEDGE TO EXISTING EAST SIDE.
3. ADD BRICK TO REMAINING BUILDING. PORTIONS OF NORTH AND SOUTH ELEVATIONS AND ALL OF EAST SIDE.

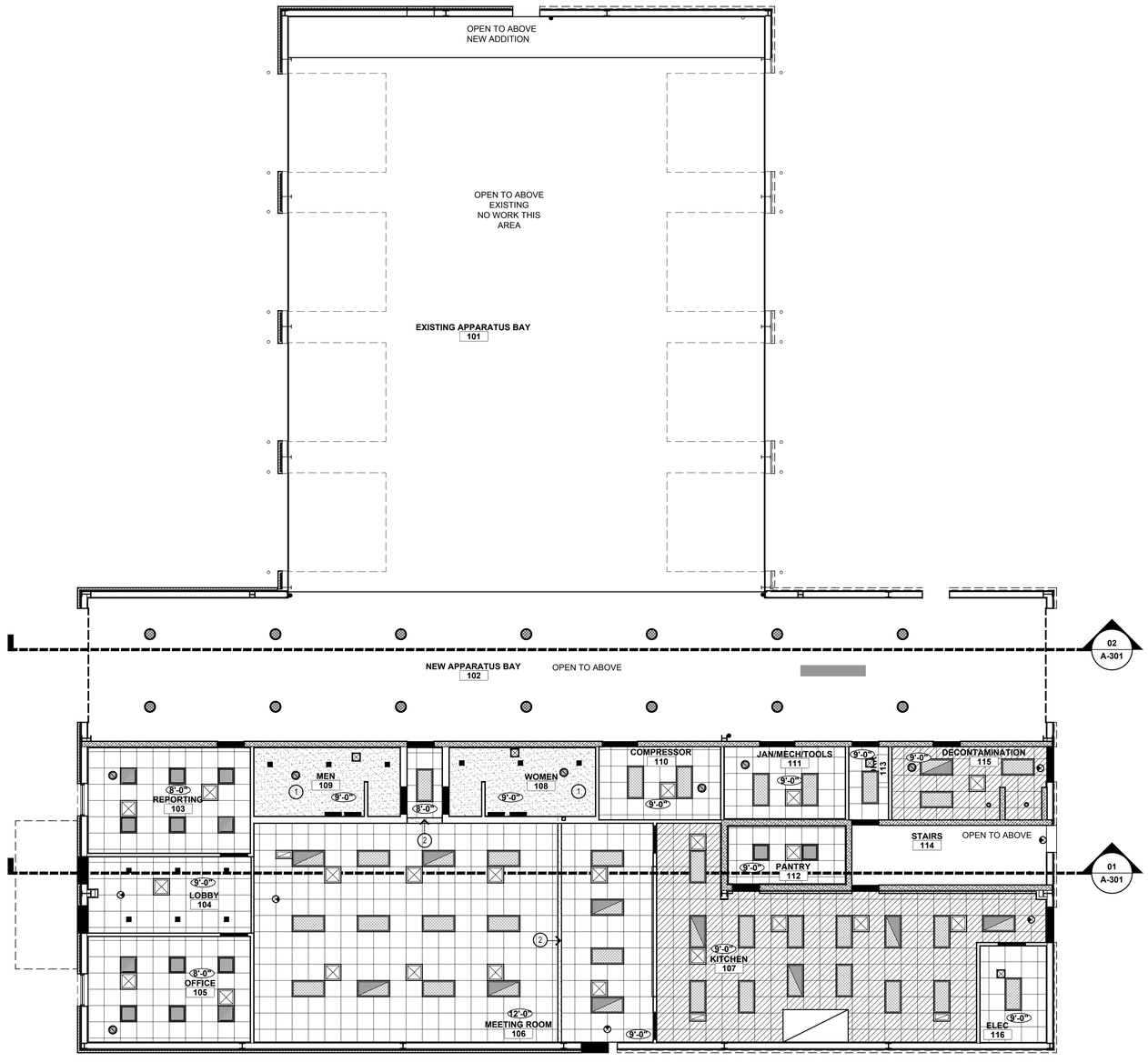

01 MAIN LEVEL CEILING PLAN

SCALE: 1/8"=1'-0"

NORTH

ARCHITECTS IN PARTNERSHIP

ARCHITECTS
INTERIOR DESIGNERS
PLANNERS

3220 MARSHALL AVENUE
NORMAN, OK 73072
TEL: 405.360.1300
FAX: 405.360.1431

SEAL:

STATE OF OKLAHOMA
GANG
4780
LICENSED ARCHITECT

08/08/2022

HENNESSEY FIRE DEPARTMENT

REMODEL/ADDITION

501 S. MAIN STREET

HENNESSEY, OKLAHOMA

REVISIONS

REV.	DATE	DESCRIPTION

PROJ. MANAGER: GL
DRAWN BY: STAFF
CHECKED BY: GL

DATE: 08/08/2022
PROJECT NO.: 2111

SHEET TITLE: CEILING PLANS

SHEET NO.: A-111

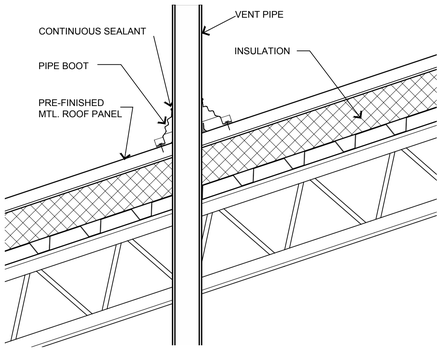

02 SECTION DETAIL
SCALE: 1 1/2"=1'-0"

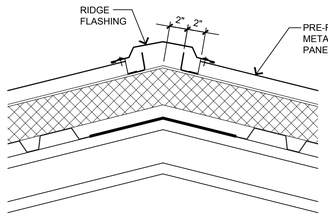

03 SECTION DETAIL
SCALE: 1 1/2"=1'-0"

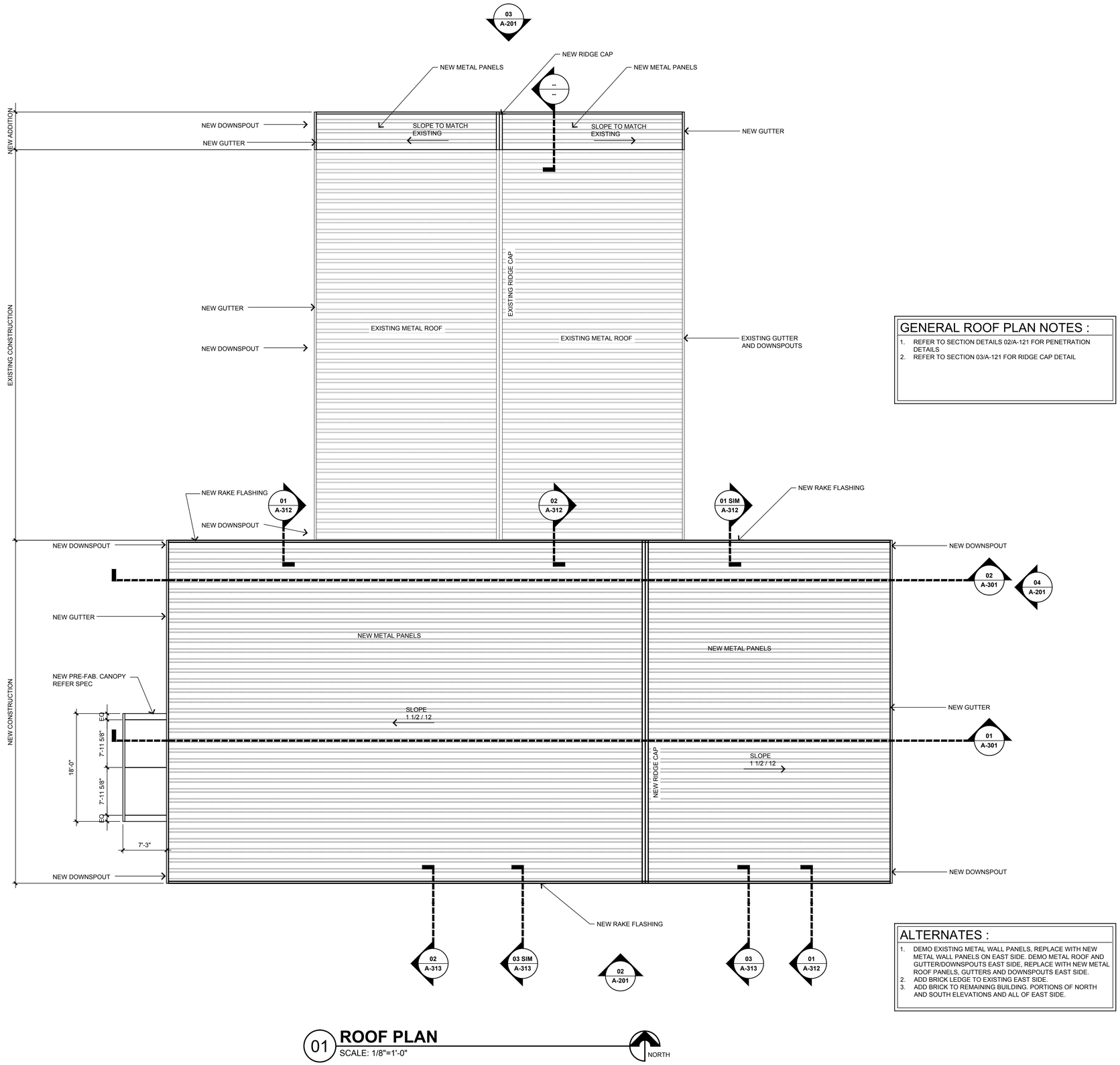

01 ROOF PLAN
SCALE: 1/8"=1'-0"

GENERAL ROOF PLAN NOTES :
1. REFER TO SECTION DETAILS 02/A-121 FOR PENETRATION DETAILS
2. REFER TO SECTION 03/A-121 FOR RIDGE CAP DETAIL

ALTERNATES :
1. DEMO EXISTING METAL WALL PANELS, REPLACE WITH NEW METAL WALL PANELS ON EAST SIDE. DEMO METAL ROOF AND GUTTER/DOWNSPOUTS EAST SIDE, REPLACE WITH NEW METAL ROOF PANELS, GUTTERS AND DOWNSPOUTS EAST SIDE.
2. ADD BRICK LEDGE TO EXISTING EAST SIDE.
3. ADD BRICK TO REMAINING BUILDING. PORTIONS OF NORTH AND SOUTH ELEVATIONS AND ALL OF EAST SIDE.

ARCHITECTS IN PARTNERSHIP

ARCHITECTS
INTERIOR DESIGNERS
PLANNERS

3220 MARSHALL AVENUE
NORMAN, OK 73072
TEL: 405.360.1300
FAX: 405.360.1431

SEAL:



08/08/2022

HENNESSEY FIRE DEPARTMENT
REMODEL/ADDITION
HENNESSEY, OKLAHOMA
501 S. MAIN STREET

REVISIONS		
REV.	DATE	DESCRIPTION

PROJ. MANAGER:	GL
DRAWN BY:	STAFF
CHECKED BY:	GL
DATE:	08/08/2022
PROJECT NO.:	2111
SHEET TITLE:	ROOF PLAN
SHEET NO.:	A-121

8/8/2022 2:05:53 PM

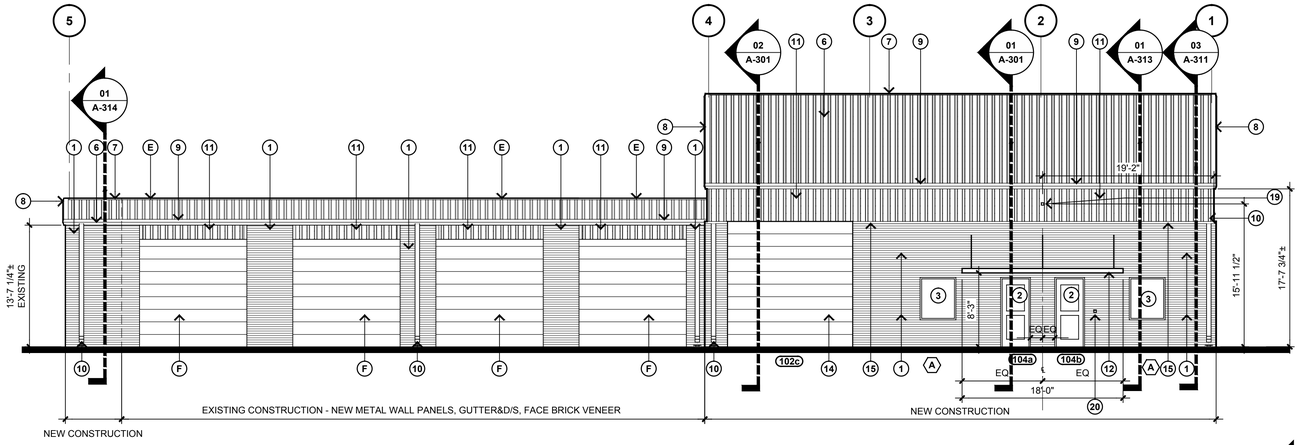

01 WEST ELEVATION

SCALE: 1/8"=1'-0" 01/A-301

NEW CONSTRUCTION ELEVATION KEY NOTES (X) :

1. MODULAR KING SIZE FACE BRICK VENEER. RUNNING BOND. COLOR TO MATCH EXISTING.
2. GLAZED ALUMINUM STOREFRONT SYSTEM
3. ALUMINUM FIXED WINDOW
4. HOLLOW METAL DOOR & FRAME.
5. MASONRY CONTROL JOINT.
6. PRE-FINISHED METAL ROOF REFER SPEC FOR TYPE, MATCH EXISTING COLOR.
7. PRE-FINISHED METAL ROOF RIDGE CAP.
8. PRE-FINISHED RAKE FLASHING.
9. PRE-FINISHED METAL GUTTER.
10. PRE-FINISHED METAL DOWNSPOUT WITH CONC. SPLASH BLOCK.
11. PRE-FINISHED METAL WALL PANELS. COLOR TO MATCH EXISTING METAL WALL PANELS. COLOR 1
12. PREFABRICATED CANOPY, 7'-0" x 18'-0". REFER SPECS
13. EXPANSION JOINT.
14. NEW OVERHEAD DOOR.
15. PRE-FINISHED METAL FLASHING 14 GA. COLOR TO MATCH PANEL.
16. ALTERNATE # 3 BRICK LIMITS AND/OR LOCATIONS
17. LOUVERS/VENTS REFER MECHANICAL
18. PRE-FINISHED WAINSCOT METAL WALL PANELS COLOR 2. COLOR 2 TO BE SELECTED BY OWNER/ARCHITECT.
19. JUNCTION BOX FOR FUTURE SIGNAGE.
20. JUNCTION BOX FOR FUTURE DOORBELL.

EXISTING ELEVATION KEY NOTES (X) :

A. EXISTING METAL WALL PANELS. REFER ALTERNATE #1 FOR REPLACEMENT NOTES
B. EXISTING PRE-FINISHED GUTTER. REFER ALTERNATE #1 FOR REPLACEMENT NOTES
C. EXISTING PRE-FINISHED DOWNSPOUT. REFER ALTERNATE #1 FOR REPLACEMENT NOTES
D. EXISTING BRICK
E. EXISTING METAL ROOF PANELS. REFER ALTERNATE #1 FOR REPLACEMENT NOTES
F. EXISTING OVERHEAD DOOR TO REMAIN.

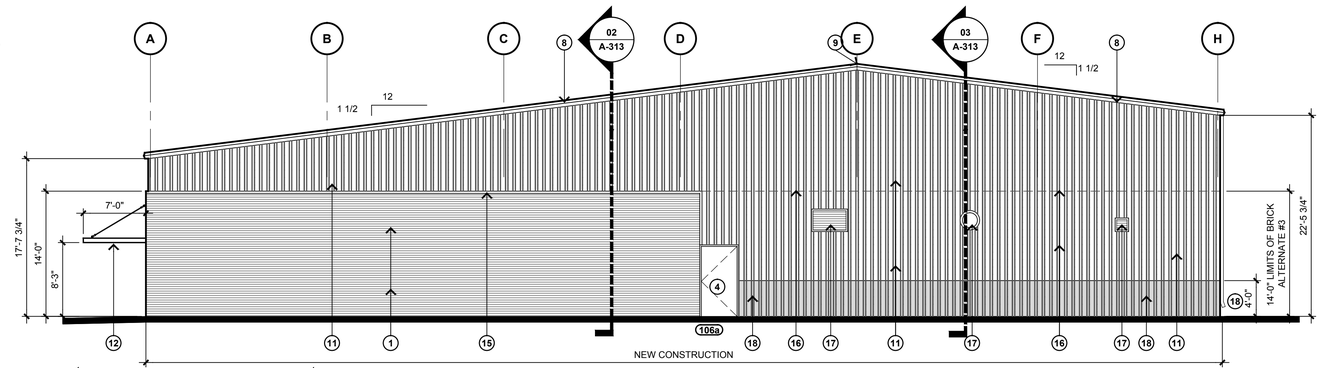

02 SOUTH ELEVATION

SCALE: 1/8"=1'-0" 01/A-301

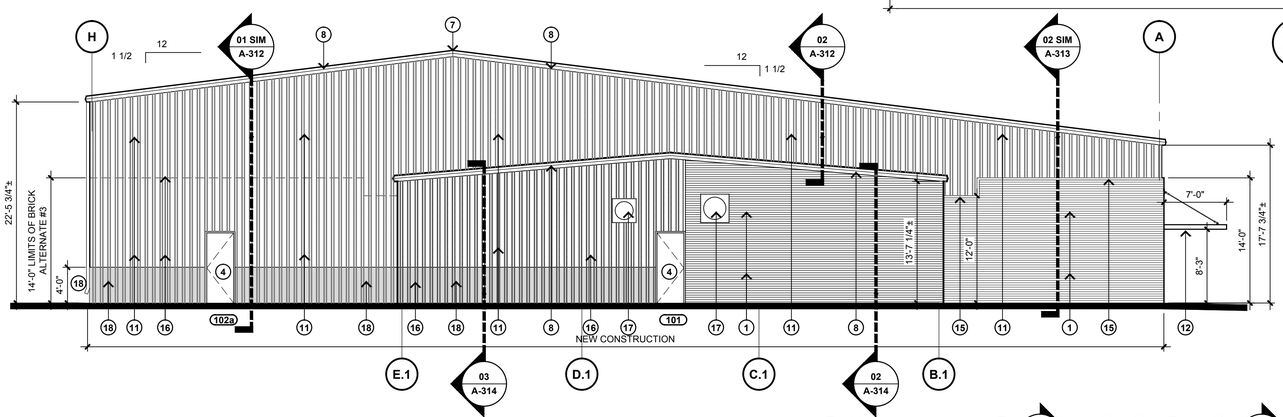

03 NORTH ELEVATION

SCALE: 1/8"=1'-0" 01/A-301

ALTERNATES :

1. DEMO EXISTING METAL WALL PANELS, REPLACE WITH NEW METAL WALL PANELS ON EAST SIDE. DEMO METAL ROOF AND GUTTER/DOWNSPOUTS EAST SIDE, REPLACE WITH NEW METAL ROOF PANELS, GUTTERS AND DOWNSPOUTS EAST SIDE.
2. ADD BRICK LEDGE TO EXISTING EAST SIDE.
3. ADD BRICK TO REMAINING BUILDING. PORTIONS OF NORTH AND SOUTH ELEVATIONS AND ALL OF EAST SIDE.

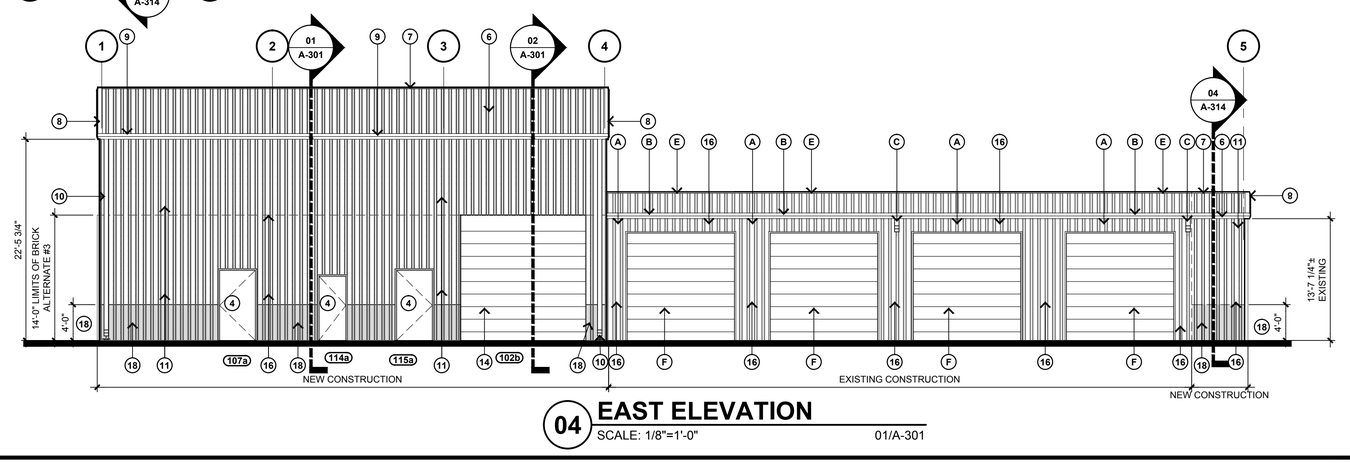

04 EAST ELEVATION

SCALE: 1/8"=1'-0" 01/A-301

ARCHITECTS IN PARTNERSHIP

ARCHITECTS
INTERIOR DESIGNERS
PLANNERS

3220 MARSHALL AVENUE
NORMAN, OK 73072
TEL: 405.360.1300
FAX: 405.360.1431

SEAL:

STATE OF OKLAHOMA GANG 4780 LICENSED ARCHITECT

08/08/2022

HENNESSEY FIRE DEPARTMENT

REMODEL/ADDITION

501 S. MAIN STREET

HENNESSEY, OKLAHOMA

REVISIONS		
REV.	DATE	DESCRIPTION

PROJ. MANAGER: GL
DRAWN BY: STAFF
CHECKED BY: GL

DATE: 08/08/2022
PROJECT NO.: 2111

SHEET TITLE: ELEVATIONS

SHEET NO.: A-201

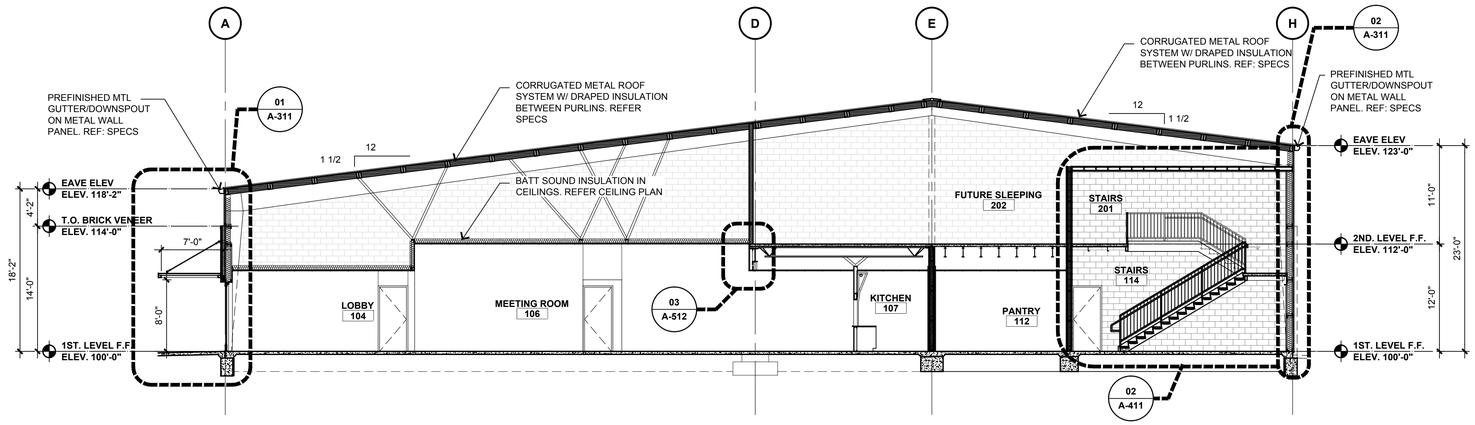

01 BUILDING SECTION

SCALE: 1/8"=1'-0" 01/A-101

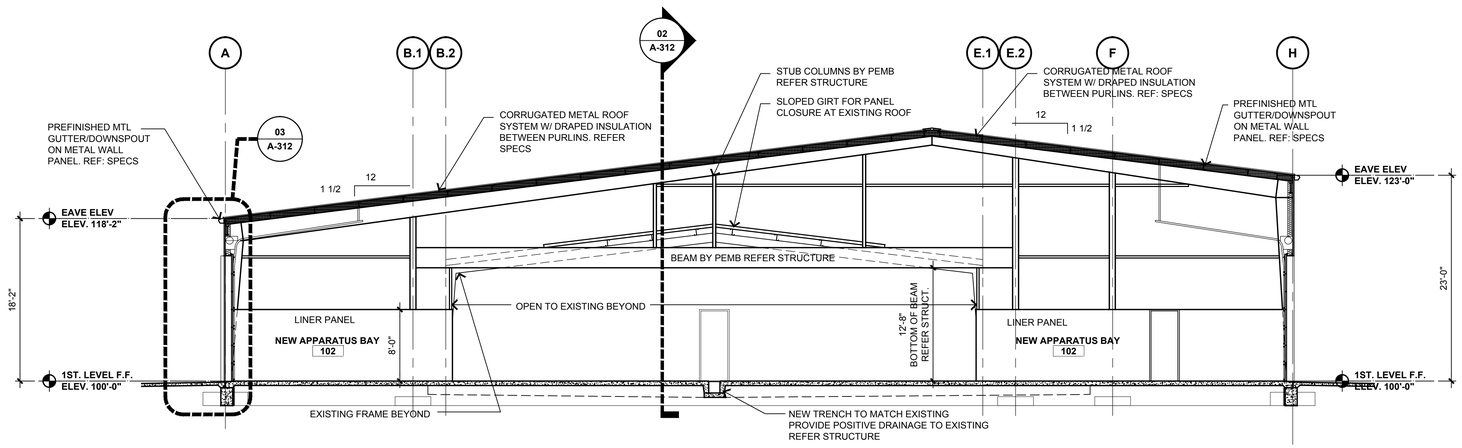

02 BUILDING SECTION

SCALE: 1/8"=1'-0" 01/A-101

ALTERNATES :

1. DEMO EXISTING METAL WALL PANELS, REPLACE WITH NEW METAL WALL PANELS ON EAST SIDE. DEMO METAL ROOF AND GUTTER/DOWNSPOUTS EAST SIDE, REPLACE WITH NEW METAL ROOF PANELS, GUTTERS AND DOWNSPOUTS EAST SIDE.
2. ADD BRICK LEDGE TO EXISTING EAST SIDE.
3. ADD BRICK TO REMAINING BUILDING. PORTIONS OF NORTH AND SOUTH ELEVATIONS AND ALL OF EAST SIDE.

ARCHITECTS IN PARTNERSHIP

ARCHITECTS
INTERIOR DESIGNERS
PLANNERS

3220 MARSHALL AVENUE
NORMAN, OK 73072
TEL: 405.360.1300
FAX: 405.360.1431

SEAL:



08/08/2022

HENNESSEY FIRE DEPARTMENT

REMODEL/ADDITION

HENNESSEY, OKLAHOMA

501 S. MAIN STREET

REVISIONS

REV.	DATE	DESCRIPTION

PROJ. MANAGER: GL
DRAWN BY: STAFF
CHECKED BY: GL

DATE: 08/08/2022
PROJECT NO.: 2111

SHEET TITLE: BUILDING SECTION

SHEET NO.: A-301

8/8/2022 2:06:19 PM

ALTERNATES :

1. DEMO EXISTING METAL WALL PANELS, REPLACE WITH NEW METAL WALL PANELS ON EAST SIDE. DEMO METAL ROOF AND GUTTER/DOWNSPOUTS EAST SIDE, REPLACE WITH NEW METAL ROOF PANELS, GUTTERS AND DOWNSPOUTS EAST SIDE.
2. ADD BRICK LEDGE TO EXISTING EAST SIDE.
3. ADD BRICK TO REMAINING BUILDING. PORTIONS OF NORTH AND SOUTH ELEVATIONS AND ALL OF EAST SIDE.

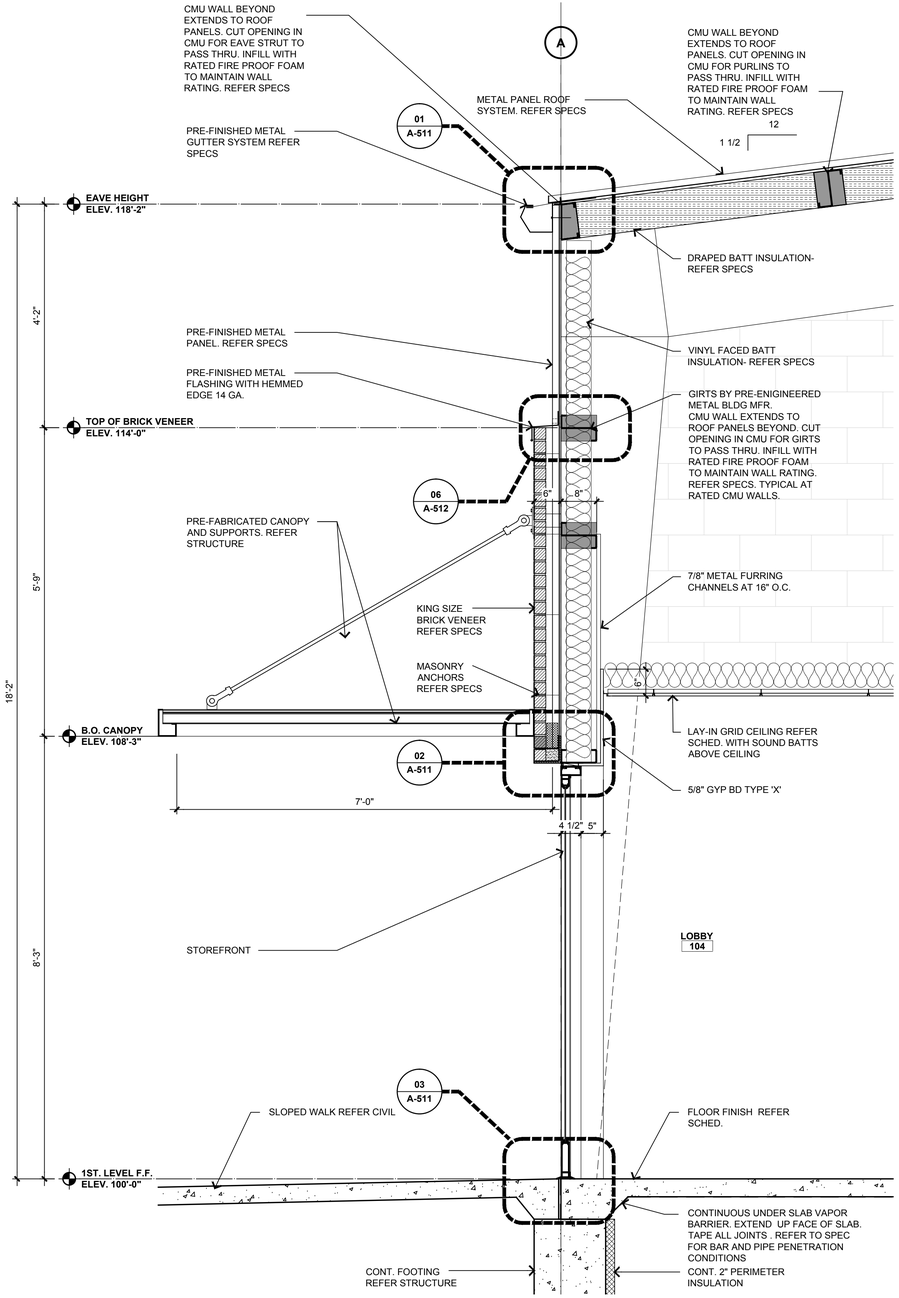

01 WALL SECTION

SCALE: 3/4"=1'-0" 01/A-301

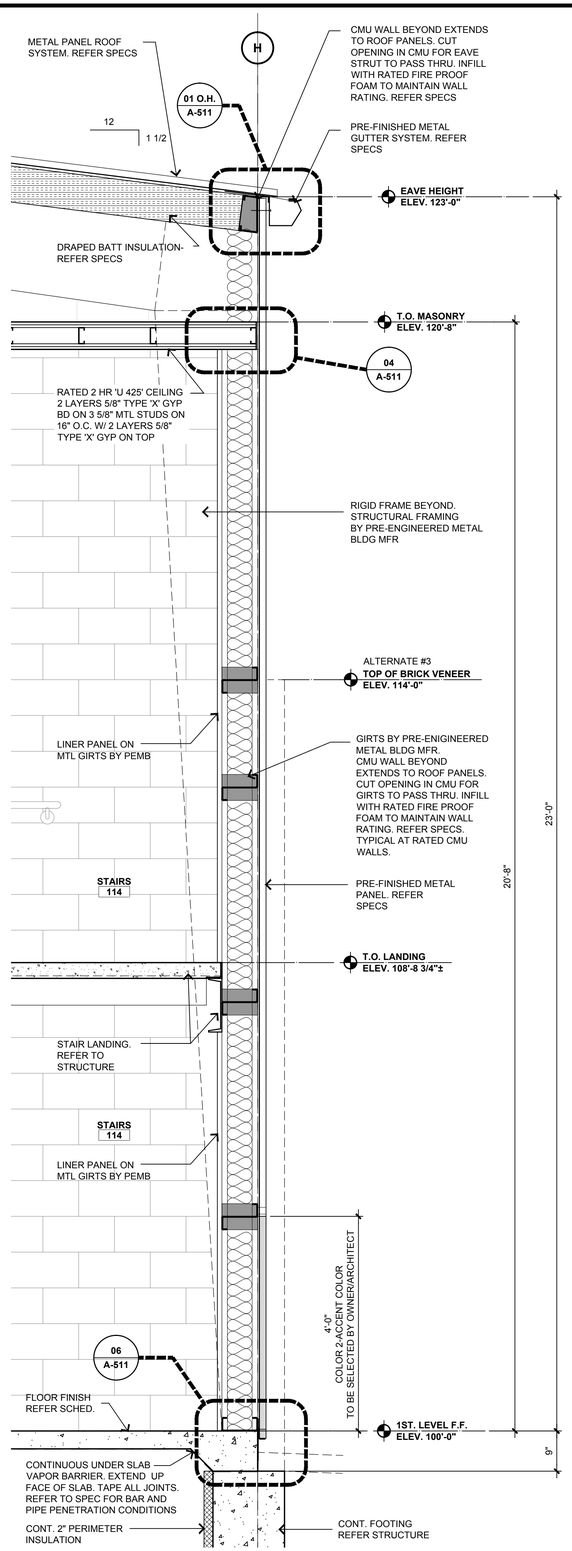

02 WALL SECTION

SCALE: 3/4"=1'-0" 01/A-301

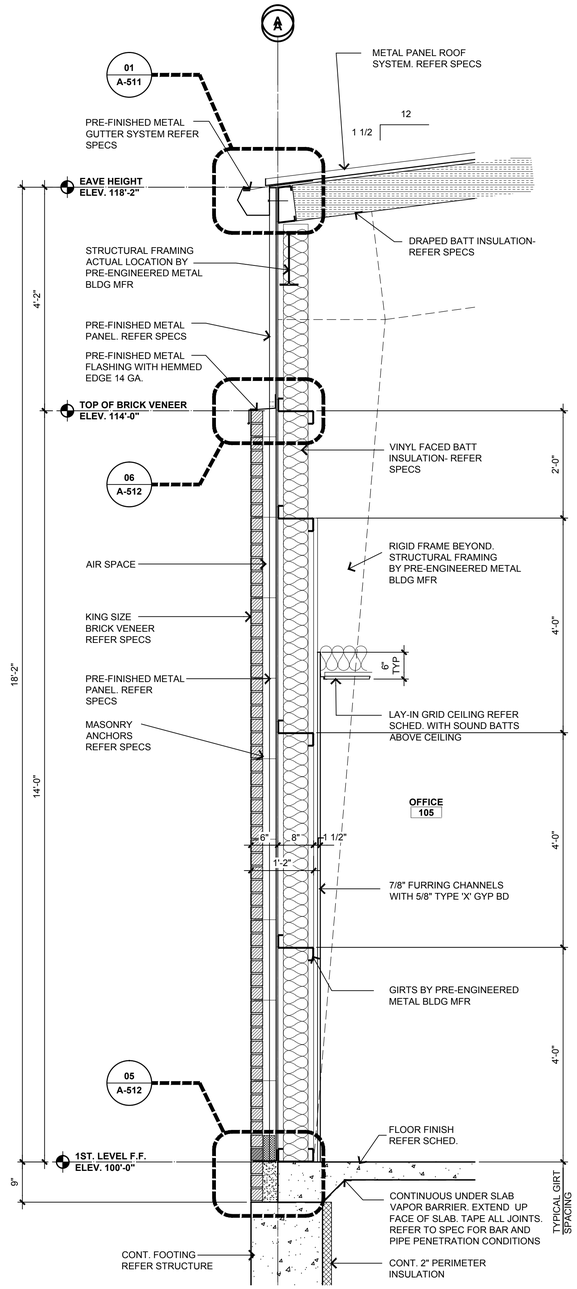

03 WALL SECTION

SCALE: 3/4"=1'-0" 01/A-101

ARCHITECTS IN PARTNERSHIP

ARCHITECTS
INTERIOR DESIGNERS
PLANNERS

3220 MARSHALL AVENUE
NORMAN, OK 73072
TEL: 405.360.1300
FAX: 405.360.1431

SEAL:



08/08/2022

HENNESSEY FIRE DEPARTMENT

REMODEL/ADDITION

HENNESSEY, OKLAHOMA

501 S. MAIN STREET

REVISIONS

REV.	DATE	DESCRIPTION

PROJ. MANAGER: GL
DRAWN BY: STAFF
CHECKED BY: GL

DATE: 08/08/2022
PROJECT NO.: 2111

SHEET TITLE: WALL SECTIONS

SHEET NO.: A-311

8/8/2022 2:06:35 PM

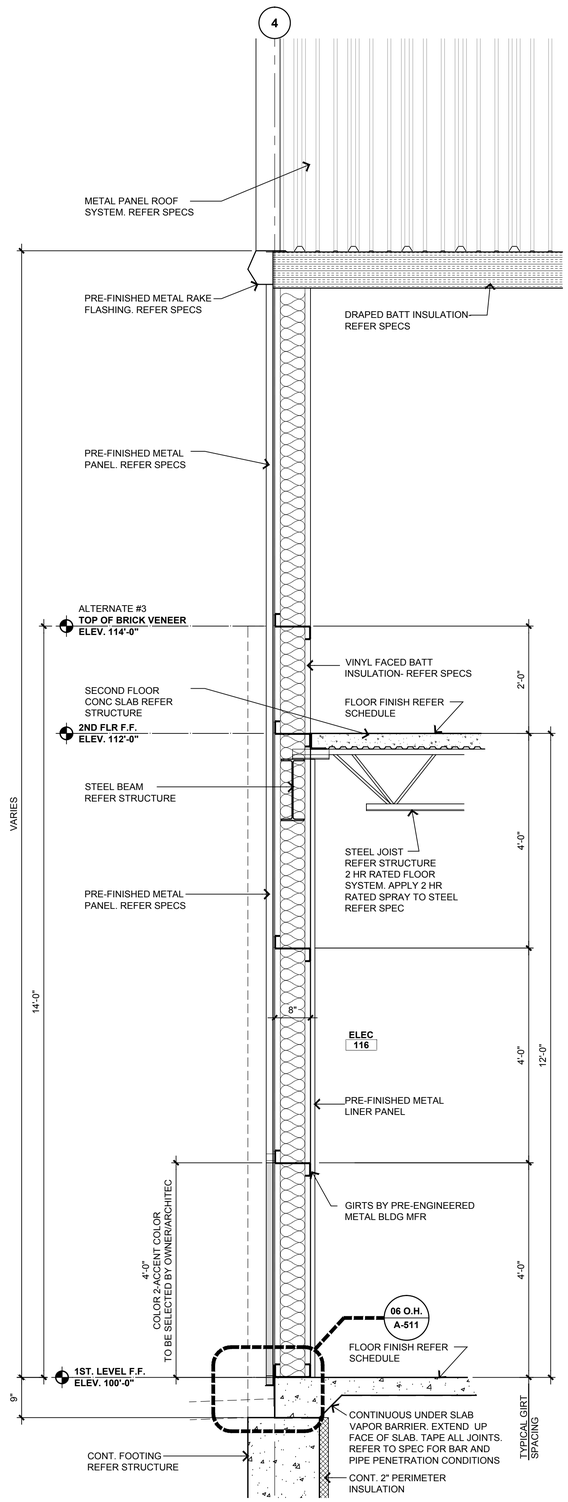

01 WALL SECTION

SCALE: 3/4"=1'-0" 01/A-101

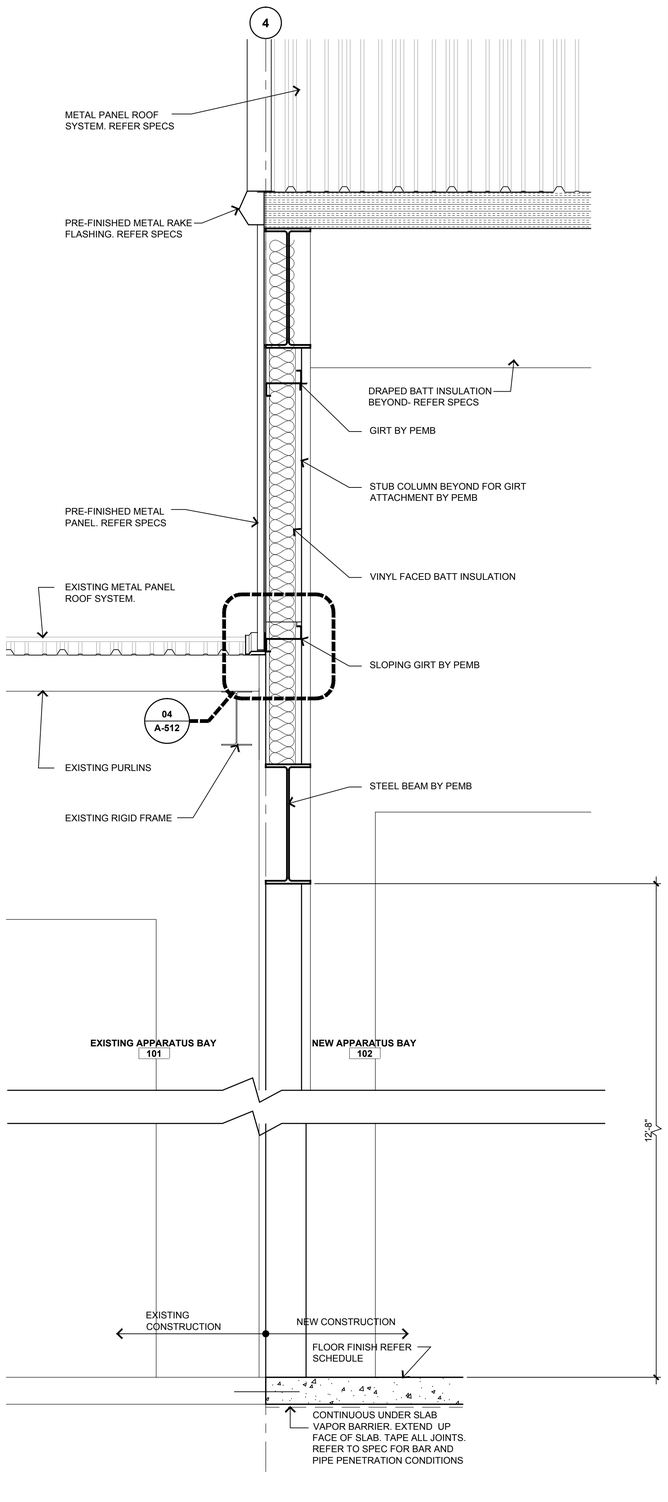

02 WALL SECTION

SCALE: 3/4"=1'-0" 02/A-301

ALTERNATES :

1. DEMO EXISTING METAL WALL PANELS, REPLACE WITH NEW METAL WALL PANELS ON EAST SIDE. DEMO METAL ROOF AND GUTTER/DOWNSPOUTS EAST SIDE, REPLACE WITH NEW METAL ROOF PANELS, GUTTERS AND DOWNSPOUTS EAST SIDE.
2. ADD BRICK LEDGE TO EXISTING EAST SIDE.
3. ADD BRICK TO REMAINING BUILDING. PORTIONS OF NORTH AND SOUTH ELEVATIONS AND ALL OF EAST SIDE.

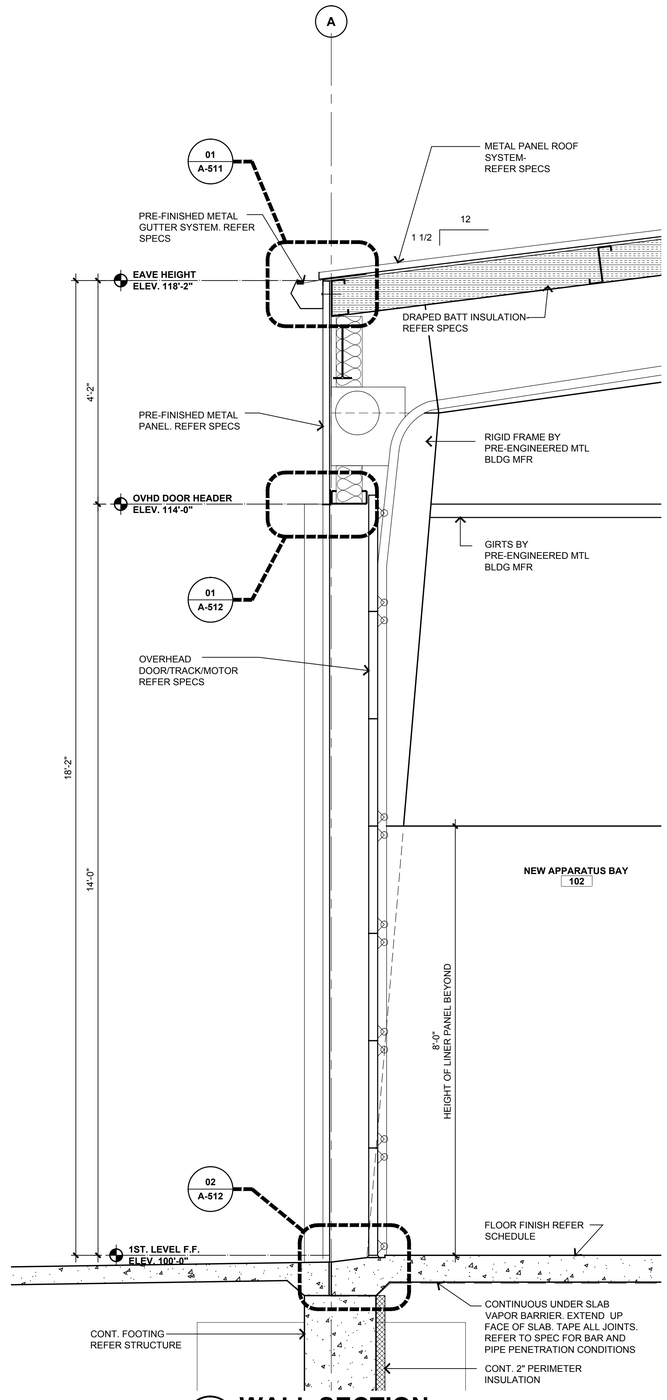

03 WALL SECTION

SCALE: 3/4"=1'-0" 02/A-301

ARCHITECTS IN PARTNERSHIP

ARCHITECTS
INTERIOR DESIGNERS
PLANNERS

3220 MARSHALL AVENUE
NORMAN, OK 73072
TEL: 405.360.1300
FAX: 405.360.1431

SEAL:



08/08/2022

HENNESSEY FIRE DEPARTMENT

REMODEL/ADDITION

HENNESSEY, OKLAHOMA

501 S. MAIN STREET

REVISIONS

REV.	DATE	DESCRIPTION

PROJ. MANAGER:	GL
DRAWN BY:	STAFF
CHECKED BY:	GL
DATE:	08/08/2022
PROJECT NO.:	2111

SHEET TITLE:

WALL SECTIONS

SHEET NO.:

A-312

8/8/2022 2:06:49 PM

ALTERNATES :

1. DEMO EXISTING METAL WALL PANELS, REPLACE WITH NEW METAL WALL PANELS ON EAST SIDE. DEMO METAL ROOF AND GUTTER/DOWNSPOUTS EAST SIDE, REPLACE WITH NEW METAL ROOF PANELS, GUTTERS AND DOWNSPOUTS EAST SIDE.
2. ADD BRICK LEDGE TO EXISTING EAST SIDE.
3. ADD BRICK TO REMAINING BUILDING. PORTIONS OF NORTH AND SOUTH ELEVATIONS AND ALL OF EAST SIDE.

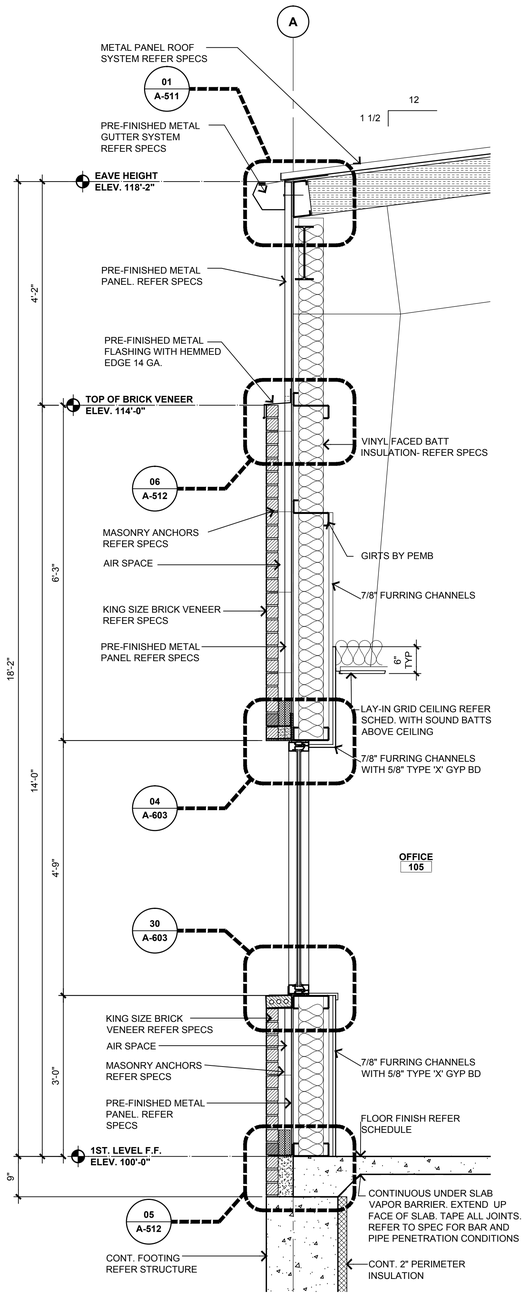

01 WALL SECTION

SCALE: 3/4"=1'-0" 01/A-101

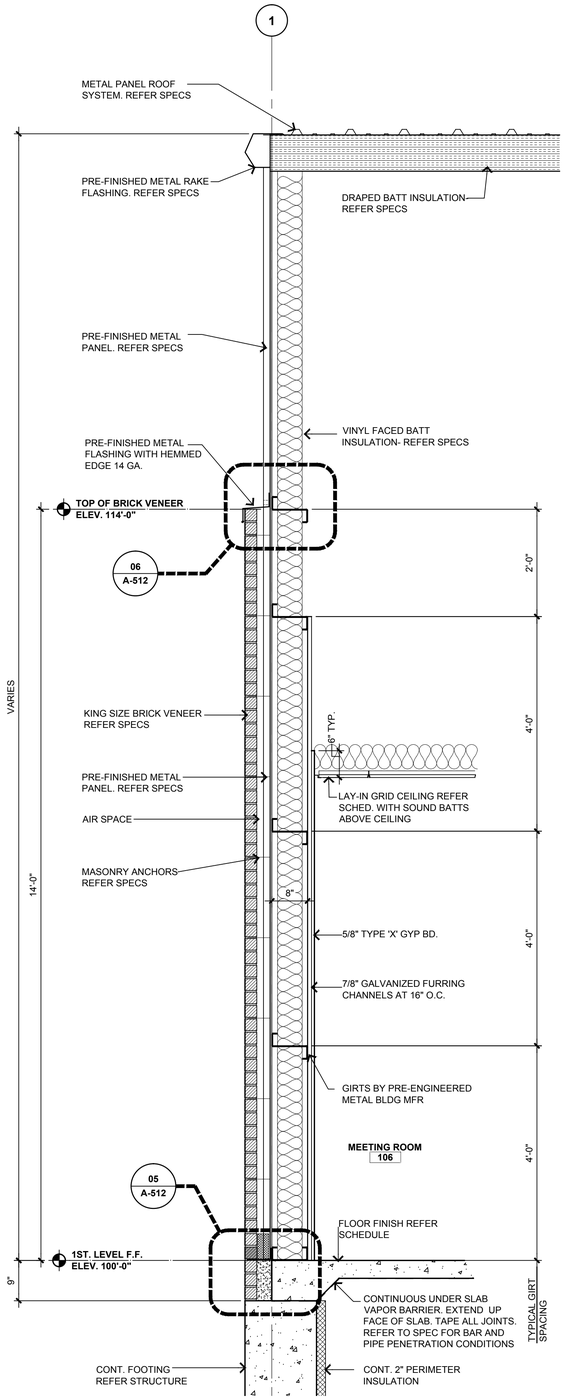

02 WALL SECTION

SCALE: 3/4"=1'-0" 01/A-101

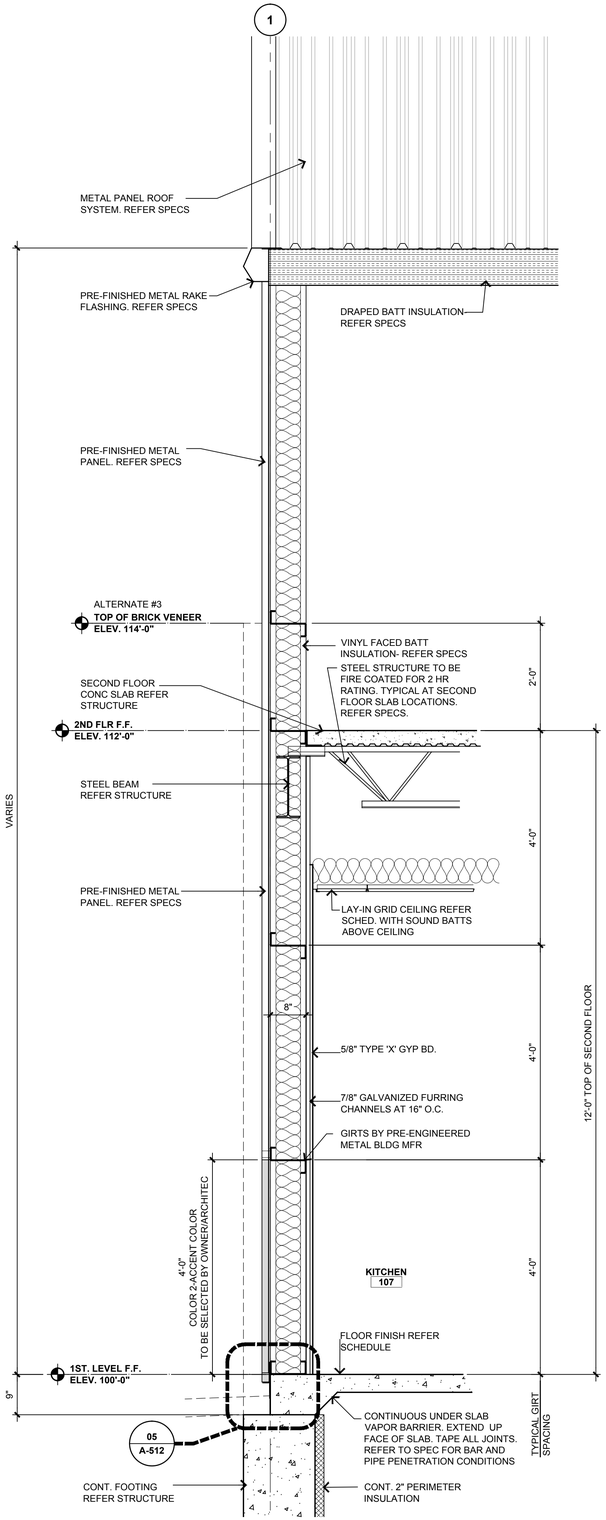

03 WALL SECTION

SCALE: 3/4"=1'-0" 01/A-101

ARCHITECTS IN PARTNERSHIP

ARCHITECTS
INTERIOR DESIGNERS
PLANNERS

3220 MARSHALL AVENUE
NORMAN, OK 73072
TEL: 405.360.1300
FAX: 405.360.1431

SEAL:

STATE OF OKLAHOMA GANG 4780 LICENSED ARCHITECT

08/08/2022

HENNESSEY FIRE DEPARTMENT
REMODEL/ADDITION
501 S. MAIN STREET
HENNESSEY, OKLAHOMA

REVISIONS

REV.	DATE	DESCRIPTION

PROJ. MANAGER: GL
DRAWN BY: STAFF
CHECKED BY: GL

DATE: 08/08/2022
PROJECT NO.: 2111

SHEET TITLE: WALL SECTIONS
SHEET NO.: A-313

8/8/2022 2:07:05 PM

ALTERNATES :

1. DEMO EXISTING METAL WALL PANELS, REPLACE WITH NEW METAL WALL PANELS ON EAST SIDE. DEMO METAL ROOF AND GUTTER/DOWNSPOUTS EAST SIDE, REPLACE WITH NEW METAL ROOF PANELS, GUTTERS AND DOWNSPOUTS EAST SIDE.
2. ADD BRICK LEDGE TO EXISTING EAST SIDE.
3. ADD BRICK TO REMAINING BUILDING. PORTIONS OF NORTH AND SOUTH ELEVATIONS AND ALL OF EAST SIDE.

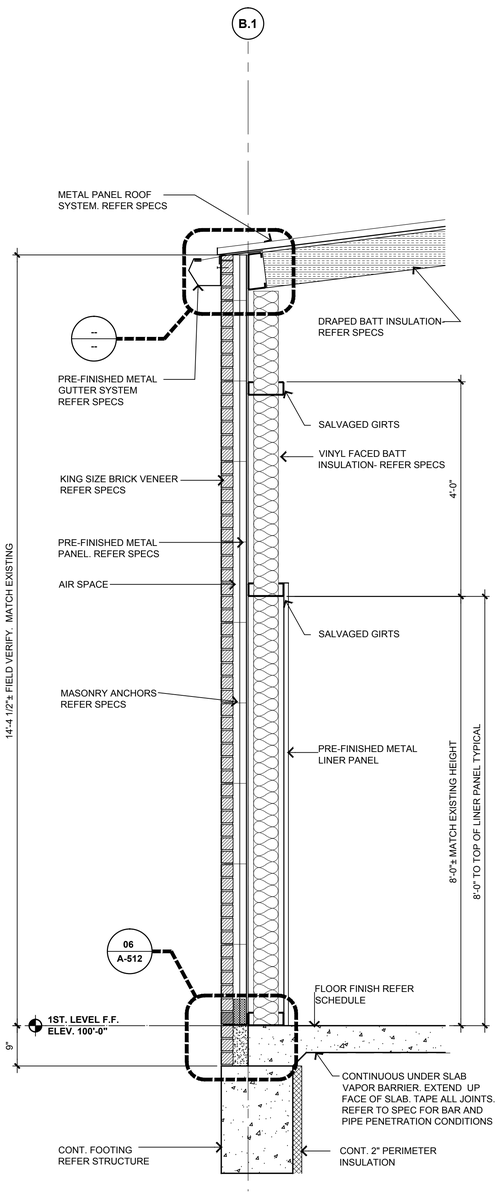

01 WALL SECTION

SCALE: 3/4"=1'-0" 01/A-101

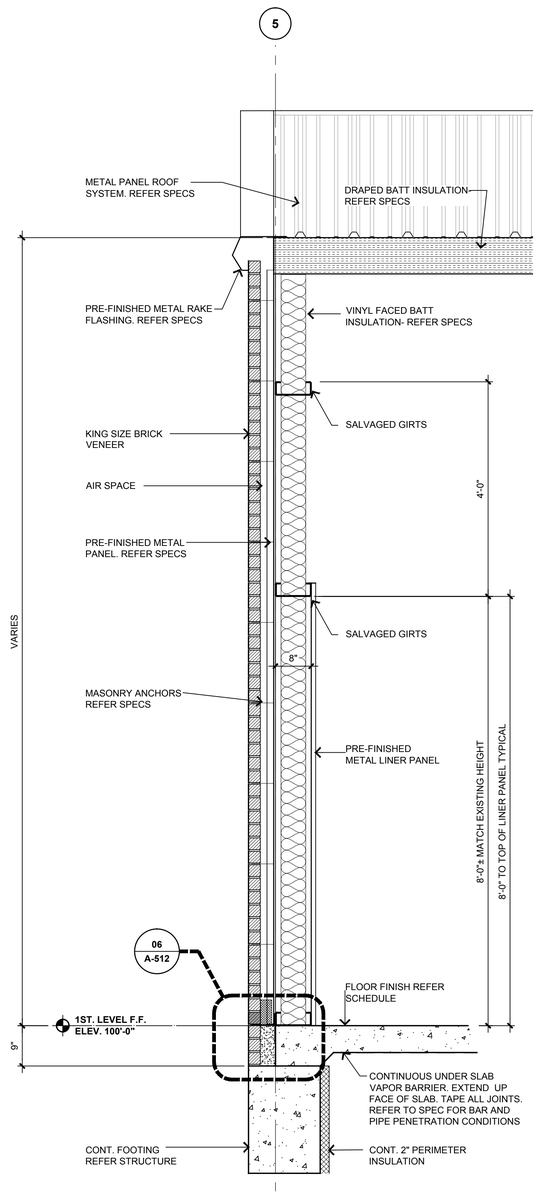

02 WALL SECTION

SCALE: 3/4"=1'-0" 01/A-101

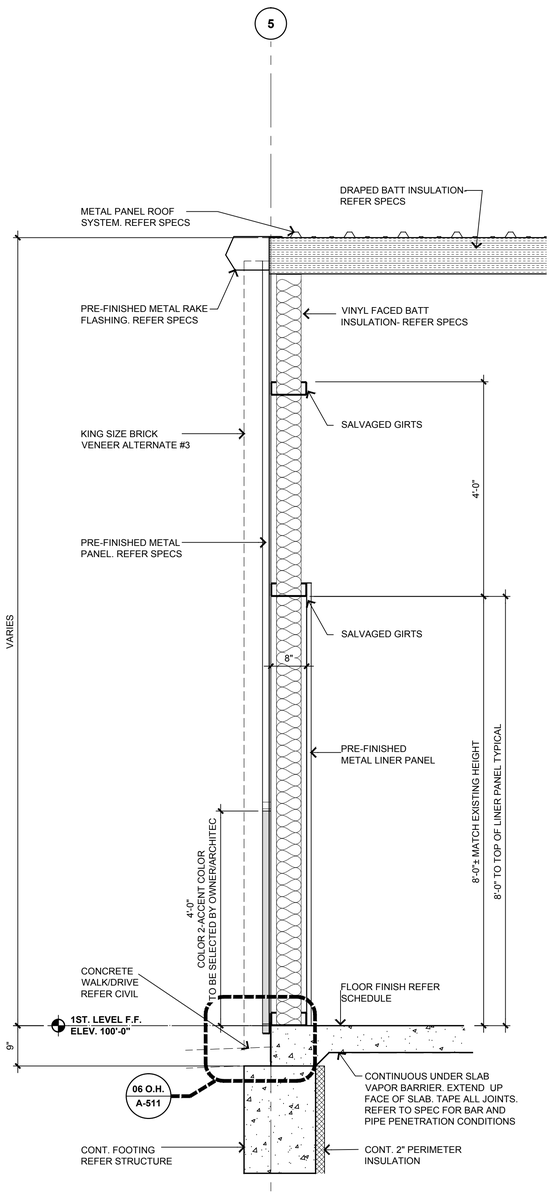

03 WALL SECTION

SCALE: 3/4"=1'-0" 01/A-101

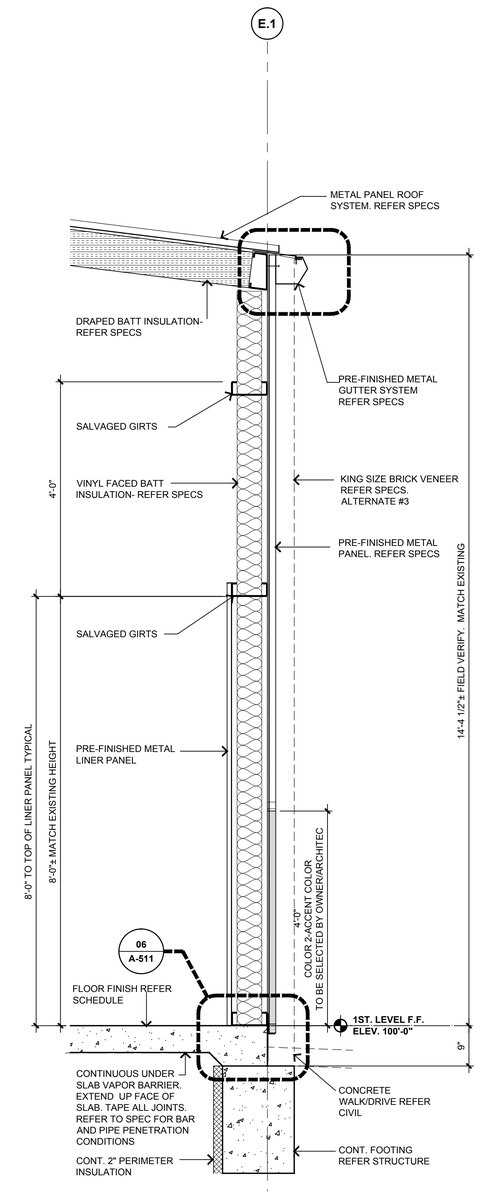

04 WALL SECTION

SCALE: 3/4"=1'-0" 01/A-101

ARCHITECTS IN PARTNERSHIP

ARCHITECTS
INTERIOR DESIGNERS
PLANNERS

3220 MARSHALL AVENUE
NORMAN, OK 73072
TEL: 405.360.1300
FAX: 405.360.1431

SEAL:

STATE OF OKLAHOMA GANG LI 4780 LICENSED ARCHITECT

08/08/2022

HENNESSEY FIRE DEPARTMENT

REMODEL/ADDITION

501 S. MAIN STREET

HENNESSEY, OKLAHOMA

REVISIONS

REV.	DATE	DESCRIPTION

PROJ. MANAGER: GL
DRAWN BY: STAFF
CHECKED BY: GL

DATE: 08/08/2022
PROJECT NO.: 2111

SHEET TITLE: WALL SECTIONS

SHEET NO.: A-314

8/8/2022 2:07:20 PM

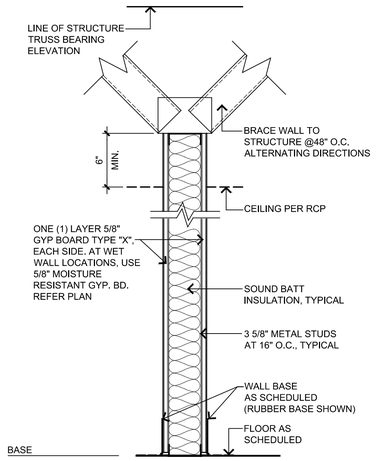

01 PARTITION NOT RATED

SCALE: 1 1/2"=1'-0"

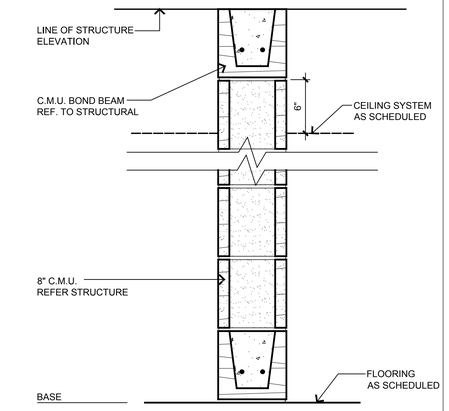

02 PARTITION NOT RATED

SCALE: 1 1/2"=1'-0"

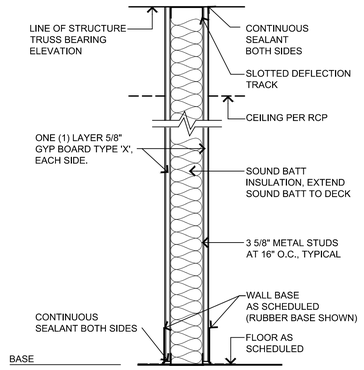

03 PARTITION NOT RATED

SCALE: 1 1/2"=1'-0"

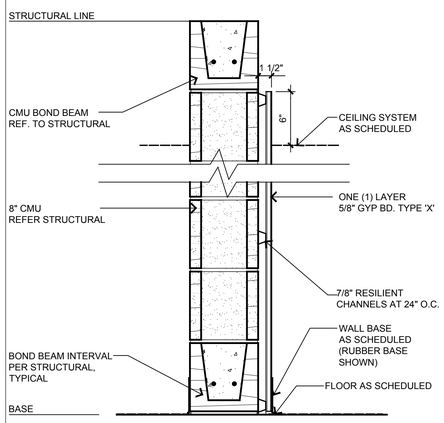

04 2 HR RATED CMU W/GYP BD

SCALE: 1 1/2"=1'-0"

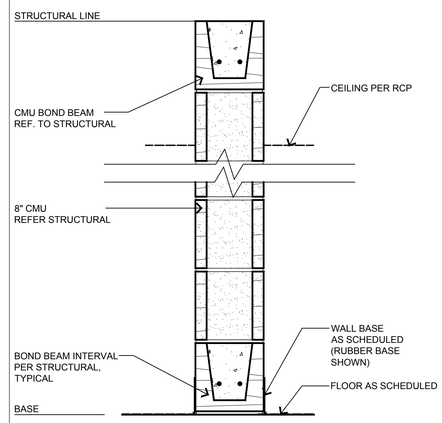

05 2 HR RATED CMU

SCALE: 1 1/2"=1'-0"

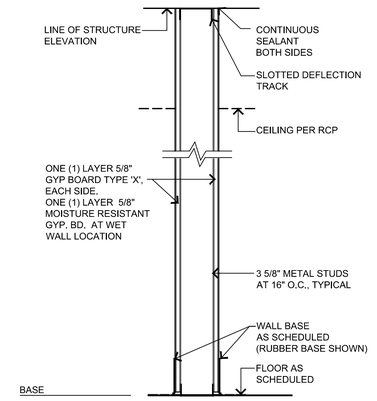

06 PARTITION NOT RATED

SCALE: 1 1/2"=1'-0"

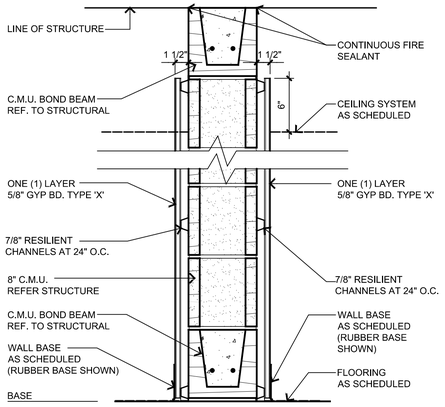

07 2 HR RATED PARTITION

SCALE: 1 1/2"=1'-0"

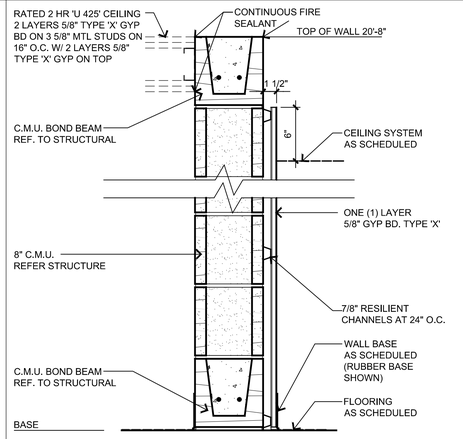

08 2 HR RATED CMU W/GYP BD

SCALE: 1 1/2"=1'-0"

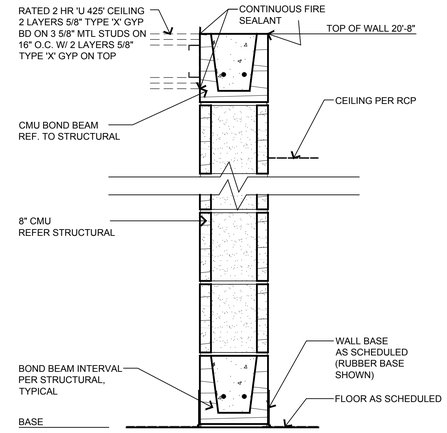

09 2 HR RATED CMU

SCALE: 1 1/2"=1'-0"

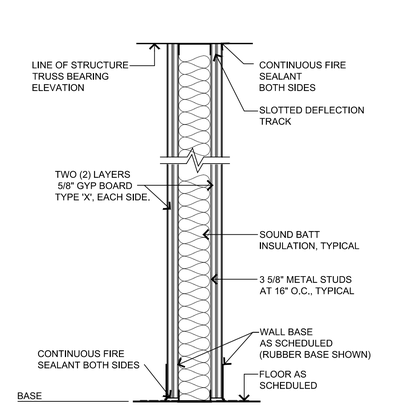

10 2 HR RATED PARTITION

SCALE: 1 1/2"=1'-0"

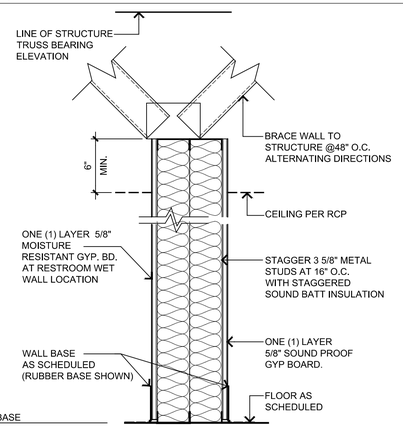

11 SOUND PARTITION NOT RATED

SCALE: 1 1/2"=1'-0"

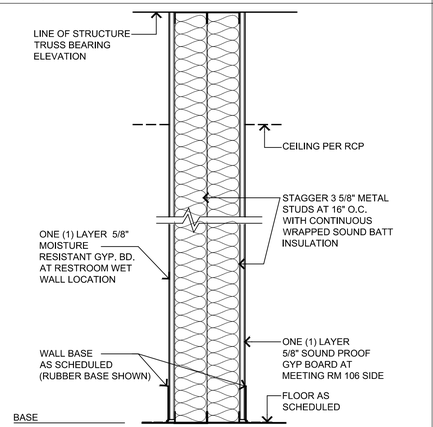

12 SOUND PARTITION NOT RATED

SCALE: 1 1/2"=1'-0"

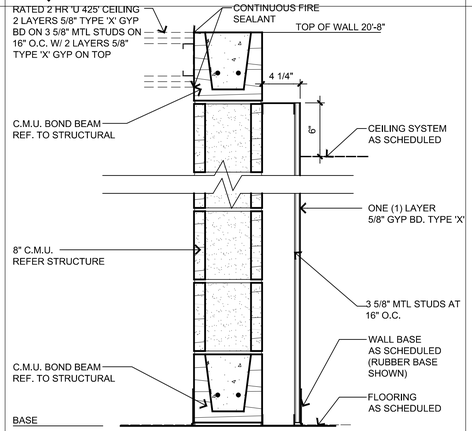

13 2 HR RATED CMU W/GYP BD

SCALE: 1 1/2"=1'-0"

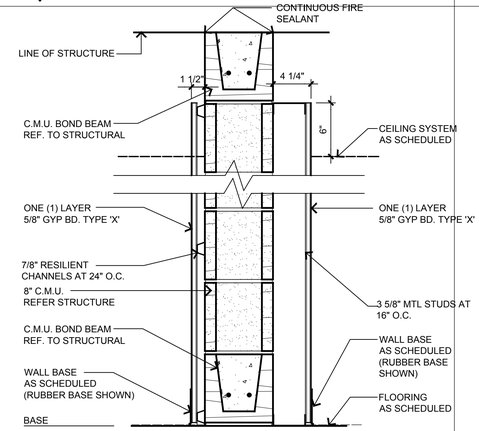

14 2 HR RATED CMU W/GYP BD

SCALE: 1 1/2"=1'-0"

ARCHITECTS IN PARTNERSHIP

ARCHITECTS
INTERIOR DESIGNERS
PLANNERS

3220 MARSHALL AVENUE
NORMAN, OK 73072
TEL: 405.360.1300
FAX: 405.360.1431

SEAL:



08/08/2022

HENNESSEY FIRE DEPARTMENT

REMODEL/ADDITION

HENNESSEY, OKLAHOMA

501 S. MAIN STREET

REVISIONS		
REV.	DATE	DESCRIPTION

PROJ. MANAGER: GL
DRAWN BY: STAFF
CHECKED BY: GL

DATE: 08/08/2022
PROJECT NO.: 2111

SHEET TITLE: PARTITION WALL TYPES

SHEET NO.: A-321

8/8/2022 2:07:34 PM

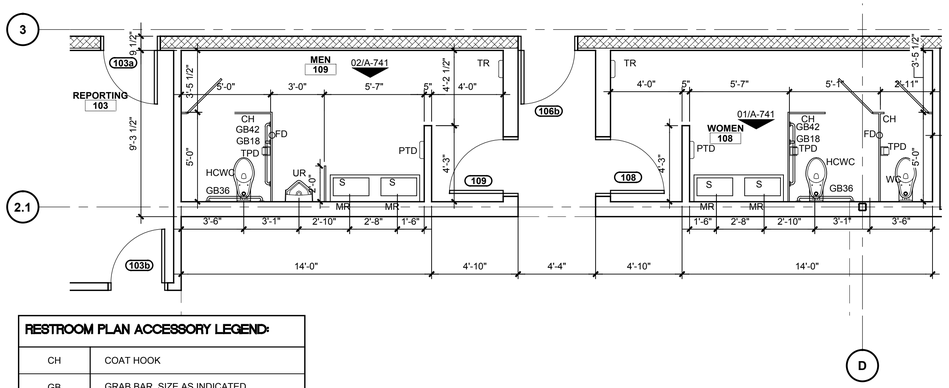

RESTROOM PLAN ACCESSORY LEGEND:	
CH	COAT HOOK
GB	GRAB BAR, SIZE AS INDICATED
UR	URINAL RE: PLUMBING PLAN
HCWC	ACCESSIBLE WATER CLOSET RE: PLUMBING
MR	24"x36" FRAMED MIRROR
PTD	PAPER TOWEL DISPENSER
S	SINK RE: PLUMBING
TPD	TOILET PAPER DISPENSER
TR	TRASH RECEPTACLE
WC	WATER CLOSET RE: PLUMBING

01 ENLARGED RESTROOM FLOOR PLANS

SCALE: 1/4"=1'-0"

NORTH

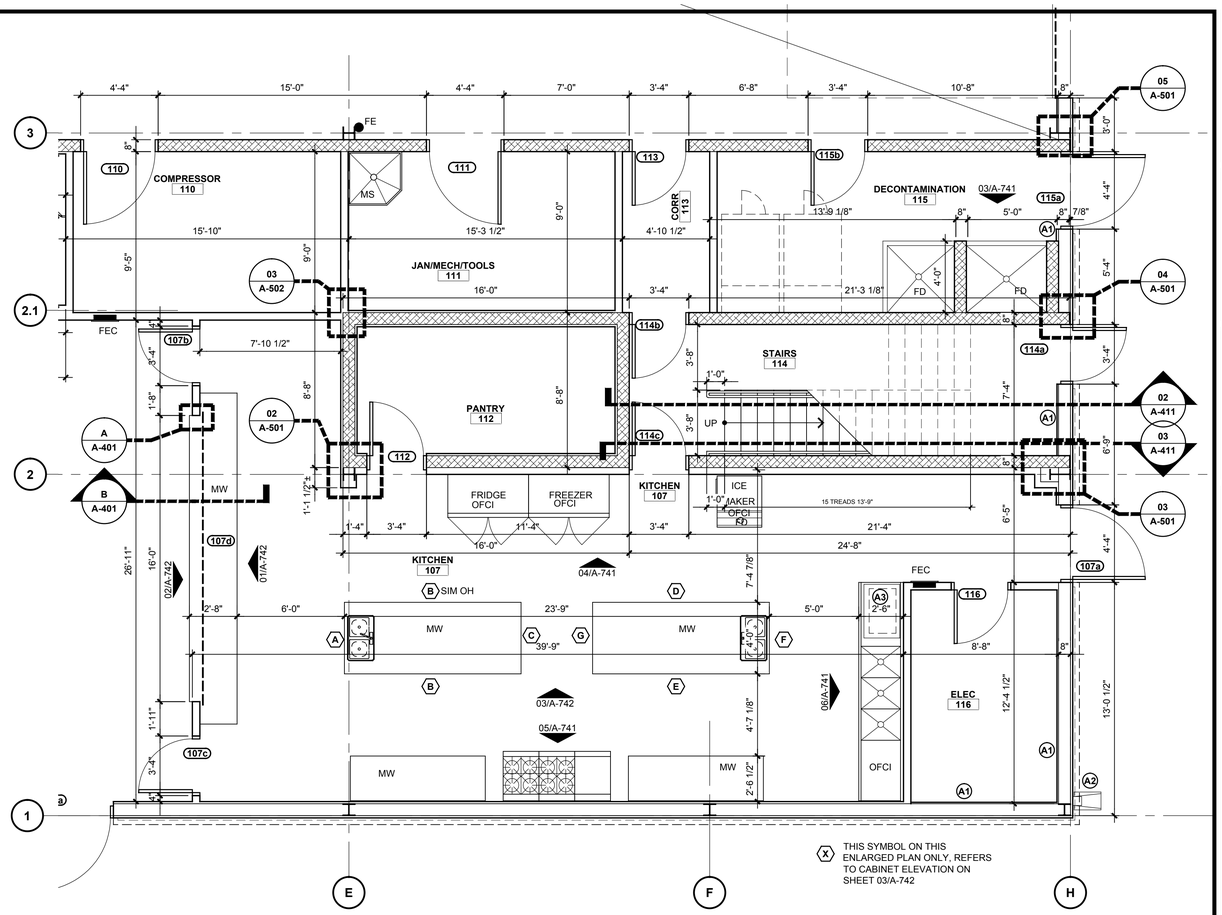

X THIS SYMBOL ON THIS ENLARGED PLAN ONLY, REFERS TO CABINET ELEVATION ON SHEET 03/A-742

02 ENLARGED KITCHEN/MISC FLOOR PLANS

SCALE: 1/4"=1'-0"

NORTH

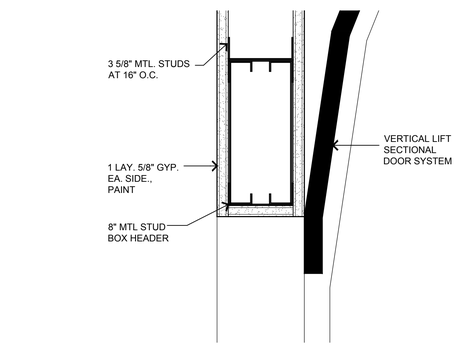

B HEADER DETAIL AT VERTICAL LIFT DOOR

SCALE: 3"=1'-0"

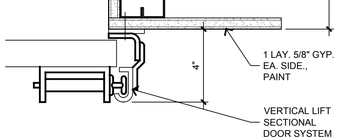

A JAMB DETAIL AT VERTICAL LIFT DOOR

SCALE: 3"=1'-0"

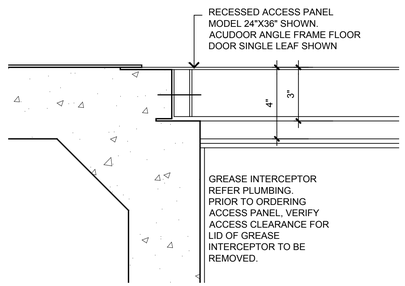

C SECTION AT GREASE INTERCEPTOR

SCALE: 3"=1'-0"

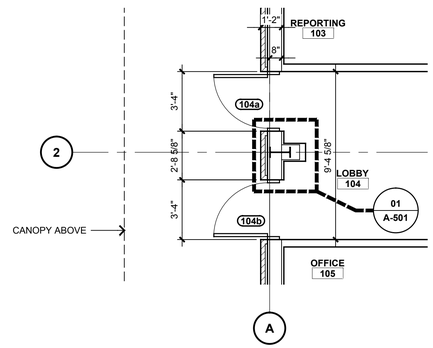

03 ENLARGED ENTRY PLAN

SCALE: 1/4"=1'-0"

NORTH

KEYNOTES KITCHEN PLAN (X) :

A1. PRE-FINISHED METAL LINER PANEL
A2. PRE-FINISHED METAL DOWNSPOUT WITH CONC. SPLASH BLOCK.
A3. GREASE INTERCEPTOR AND FLOOR ACCESS PANEL. RECESSED IN FLOOR. REFER PLUMBING, STRUCTURE AND DETAIL C/A-401.

PLAN LEGEND:

DS	DOWNSPOUT, REFER PLUMBING
FD	FLOOR DRAIN - REF: PLUMBING
FEC	FIRE EXTINGUISHER CABINET
MS	MOP SINK - REF: PLUMBING
MW	BUILT-IN MILLWORK
	METAL STUD WALL
	CMU WALL
	BRICK-ALTERNATE #3.
	NEW FACE BRICK VENEER
	NEW FACE BRICK VENEER 3' WAINSCOT
	EXISTING BUILDING SLAB TO REMAIN

ALTERNATES :

1. DEMO EXISTING METAL WALL PANELS, REPLACE WITH NEW METAL WALL PANELS ON EAST SIDE. DEMO METAL ROOF AND GUTTER/DOWNSPOUTS EAST SIDE, REPLACE WITH NEW METAL ROOF PANELS, GUTTERS AND DOWNSPOUTS EAST SIDE.
2. ADD BRICK LEDGE TO EXISTING EAST SIDE.
3. ADD BRICK TO REMAINING BUILDING. PORTIONS OF NORTH AND SOUTH ELEVATIONS AND ALL OF EAST SIDE.

ARCHITECTS IN PARTNERSHIP

ARCHITECTS
INTERIOR DESIGNERS
PLANNERS

3220 MARSHALL AVENUE
NORMAN, OK 73072
TEL: 405.360.1300
FAX: 405.360.1431

SEAL:

STATE OF OKLAHOMA
GANG
4780
LICENSED ARCHITECT

08/08/2022

HENNESSEY FIRE DEPARTMENT

REMODEL/ADDITION

HENNESSEY, OKLAHOMA

501 S. MAIN STREET

REVISIONS

REV.	DATE	DESCRIPTION

PROJ. MANAGER: GL
DRAWN BY: STAFF
CHECKED BY: GL

DATE: 08/08/2022
PROJECT NO.: 2111

SHEET TITLE: ENLARGED FLOOR PLANS

SHEET NO.: A-401

8/8/2022 2:07:44 PM

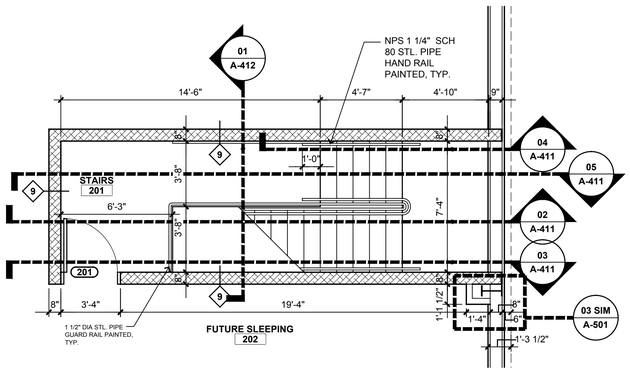

2ND LEVEL ENLARGED STAIR PLAN

01 SCALE: 1/4"=1'-0" NORTH

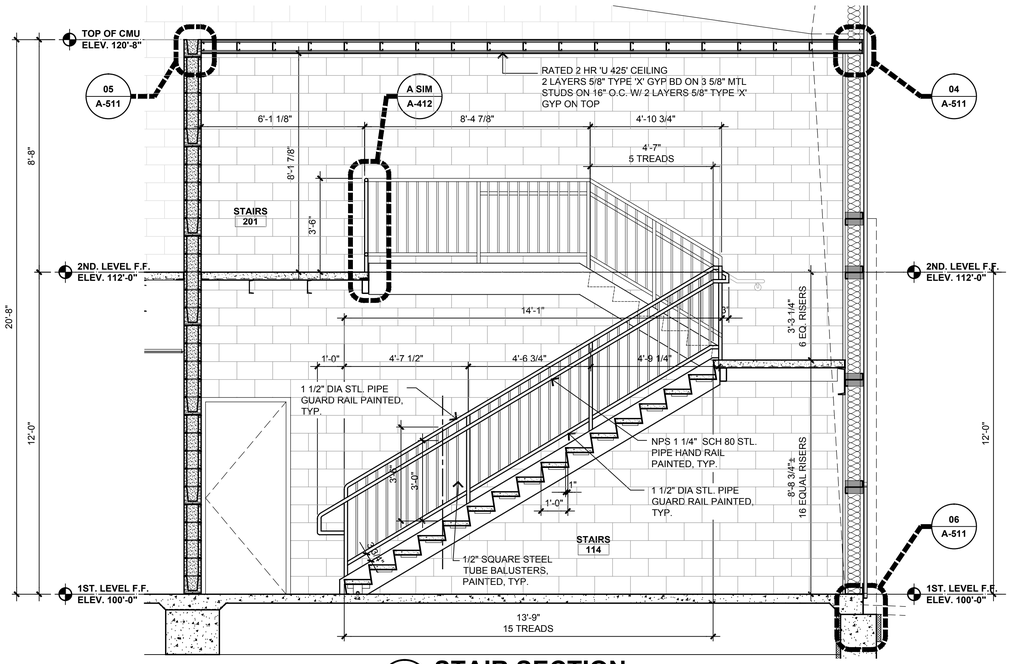

02 STAIR SECTION

SCALE: 3/8"=1'-0" 01/A-301

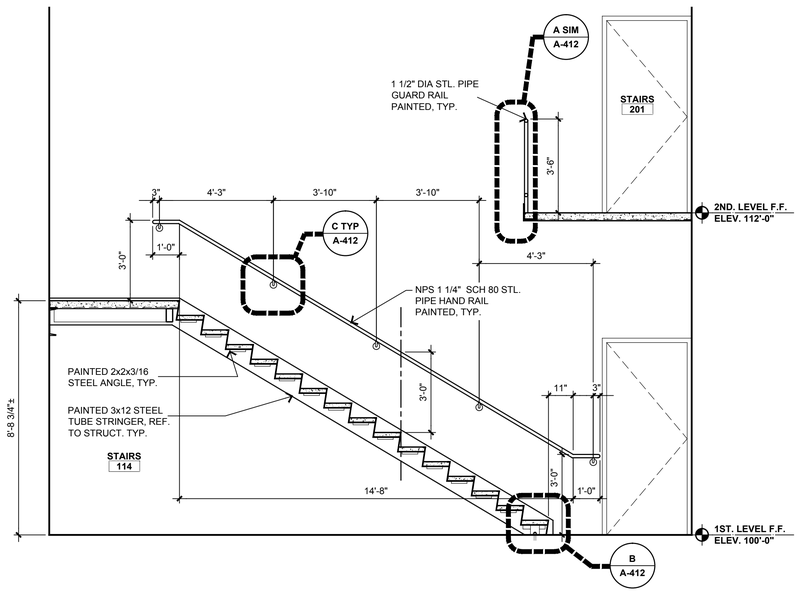

03 STAIR SECTION

SCALE: 3/8"=1'-0" 01/A-411

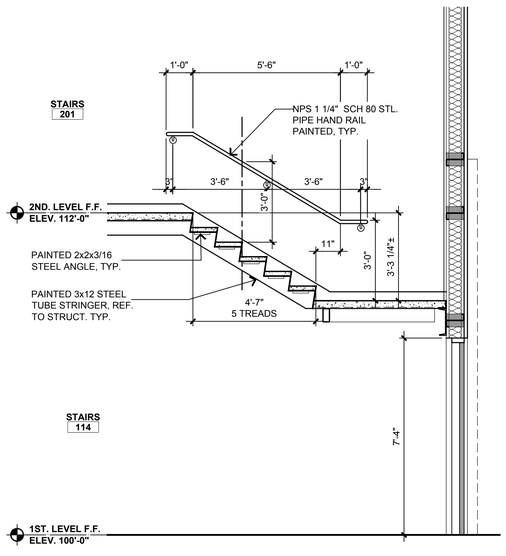

04 STAIR SECTION

SCALE: 3/8"=1'-0" 01/A-411

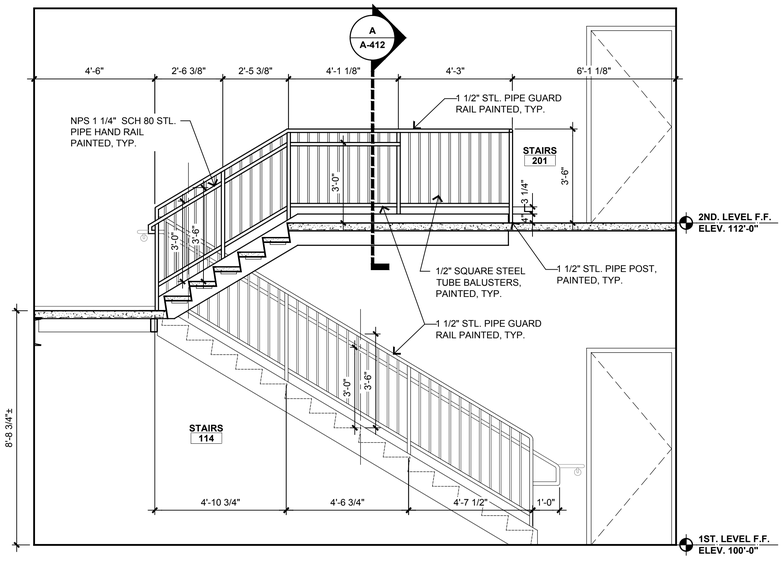

05 STAIR RAILING SECTION

SCALE: 3/8"=1'-0" 01/A-411

ARCHITECTS IN PARTNERSHIP

ARCHITECTS
INTERIOR DESIGNERS
PLANNERS

3220 MARSHALL AVENUE
NORMAN, OK 73072
TEL: 405.360.1300
FAX: 405.360.1431

SEAL:

STATE OF OKLAHOMA
GANG
4780
LICENSED ARCHITECT

08/08/2022

HENNESSEY FIRE DEPARTMENT

REMODEL/ADDITION

501 S. MAIN STREET

HENNESSEY, OKLAHOMA

REVISIONS

REV.	DATE	DESCRIPTION

PROJ. MANAGER: GL
DRAWN BY: STAFF
CHECKED BY: GL

DATE: 08/08/2022
PROJECT NO.: 2111

SHEET TITLE: STAIR SECTION

SHEET NO.: A-411

8/8/2022 2:08:00 PM

NOTE: VERIFY MEASUREMENTS / SLOPES OF ALL HANDRAILS / GUARDRAILS PRIOR TO ORDERING

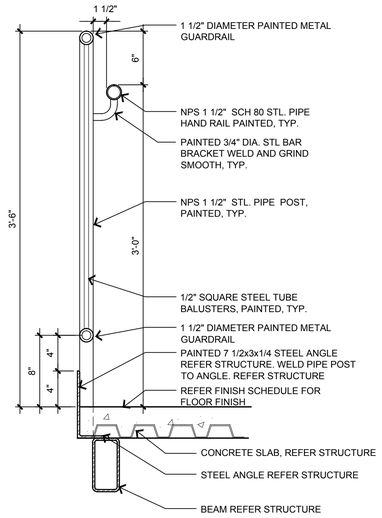

A GUARDRAIL/ HANDRAIL SECTION

SCALE: 1 1/2"=1'-0"

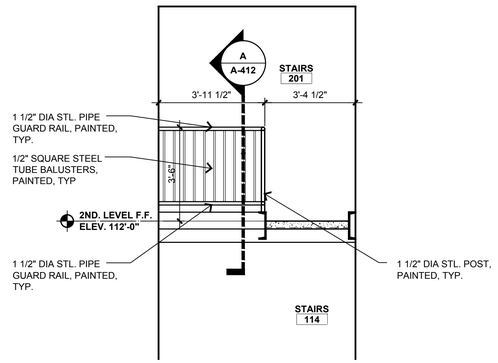

01 STAIR SECTION

SCALE: 3/8"=1'-0" X-AXXX

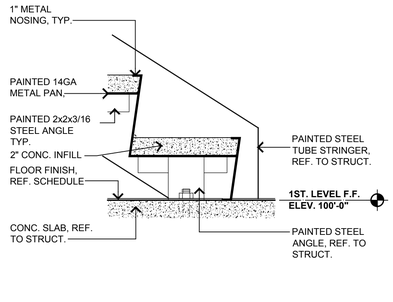

B TYPICAL CONCRETE PAN STAIR SECTION

SCALE: 1 1/2"=1'-0"

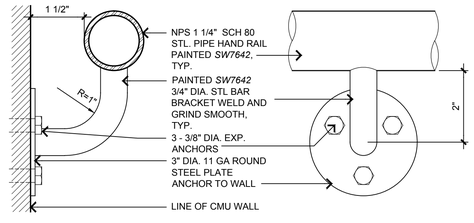

C TYPICAL HANDRAIL SECTION

SCALE: 6"=1'-0"

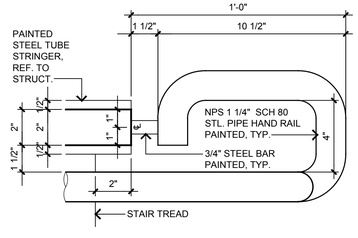

D STAIR HANDRAIL DETAIL

SCALE: 3"=1'-0"

ARCHITECTS IN PARTNERSHIP

ARCHITECTS
INTERIOR DESIGNERS
PLANNERS

3220 MARSHALL AVENUE
NORMAN, OK 73072
TEL: 405.360.1300
FAX: 405.360.1431

SEAL:



08/08/2022

HENNESSEY FIRE DEPARTMENT

REMODEL/ADDITION

501 S. MAIN STREET

HENNESSEY, OKLAHOMA

REVISIONS		
REV.	DATE	DESCRIPTION

PROJ. MANAGER:	GL
DRAWN BY:	STAFF
CHECKED BY:	GL
DATE:	08/08/2022
PROJECT NO.:	2111
SHEET TITLE:	STAIR SECTION
SHEET NO.:	A-412

8/8/2022 2:08:15 PM

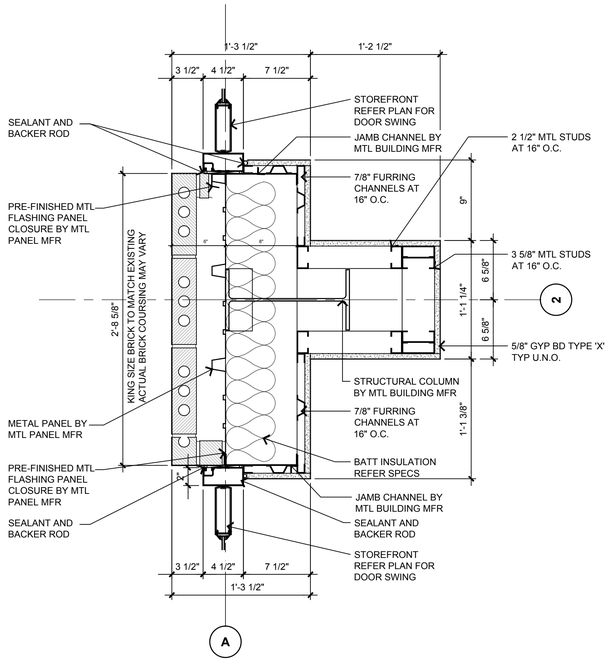

01 PLAN DETAIL
SCALE: 1 1/2"=1'-0" 03/A-401

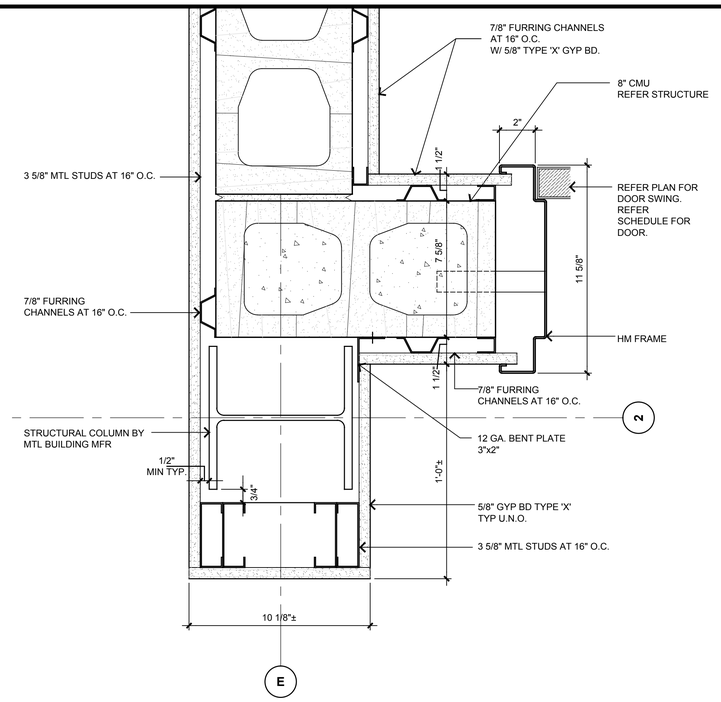

02 PLAN DETAIL
SCALE: 3"=1'-0" 02/A-401

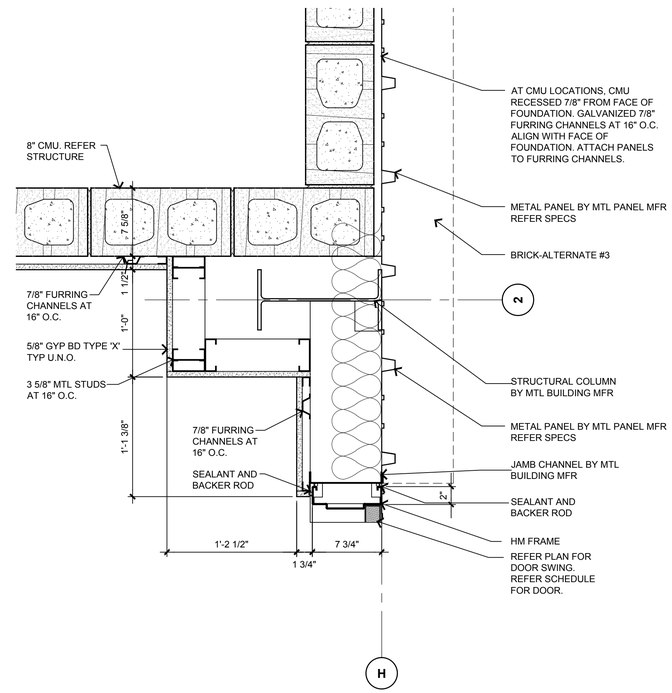

03 PLAN DETAIL ABOVE WAINSCOT
SCALE: 1 1/2"=1'-0" 02/A-401

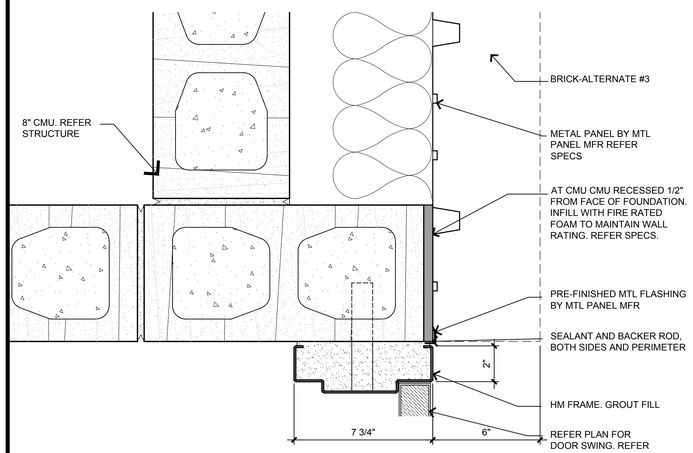

04 PLAN DETAIL
SCALE: 3"=1'-0" 02/A-401

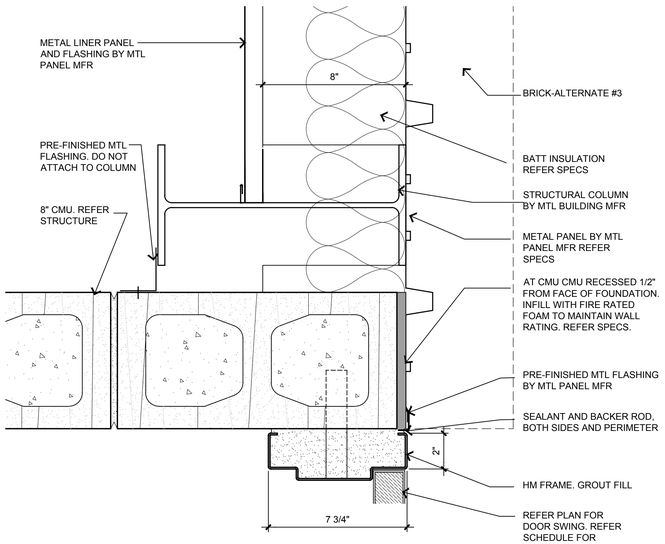

05 PLAN DETAIL
SCALE: 3"=1'-0" 02/A-401

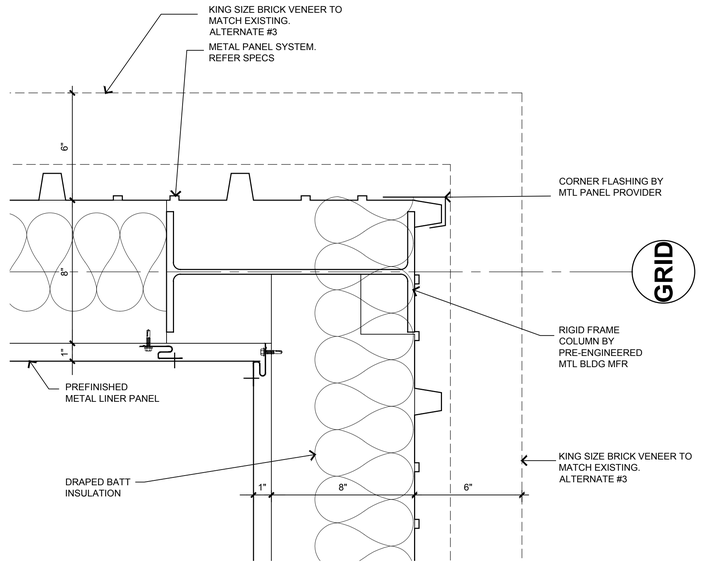

06 CORNER PLAN DETAIL
SCALE: 3"=1'-0"

ARCHITECTS IN PARTNERSHIP

ARCHITECTS
INTERIOR DESIGNERS
PLANNERS

3220 MARSHALL AVENUE
NORMAN, OK 73072
TEL: 405.360.1300
FAX: 405.360.1431

SEAL:



08/08/2022

HENNESSEY FIRE DEPARTMENT
REMODEL/ADDITION
501 S. MAIN STREET
HENNESSEY, OKLAHOMA

REVISIONS		
REV.	DATE	DESCRIPTION

PROJ. MANAGER:	GL
DRAWN BY:	STAFF
CHECKED BY:	GL
DATE:	08/08/2022
PROJECT NO.:	2111
SHEET TITLE:	PLAN DETAILS
SHEET NO.:	A-501

8/8/2022 2:08:29 PM

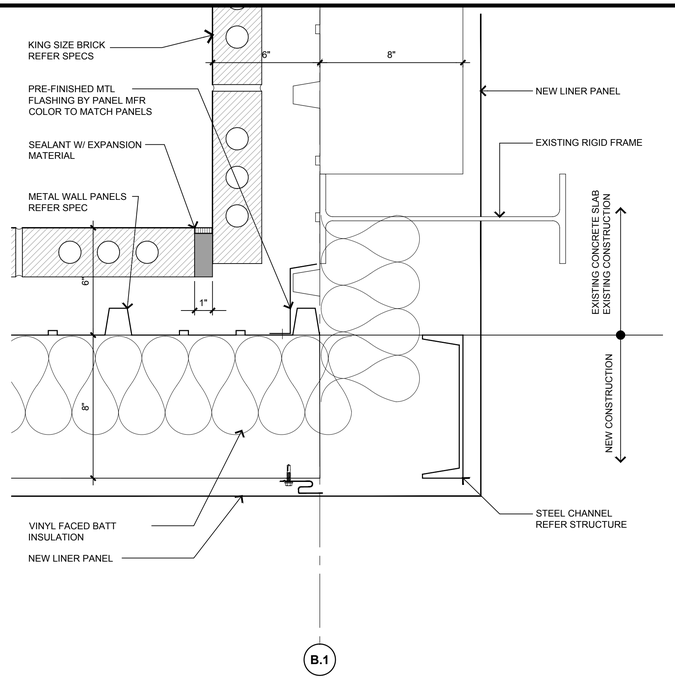

01 PLAN DETAIL

SCALE: 3"=1'-0" 01/A-101

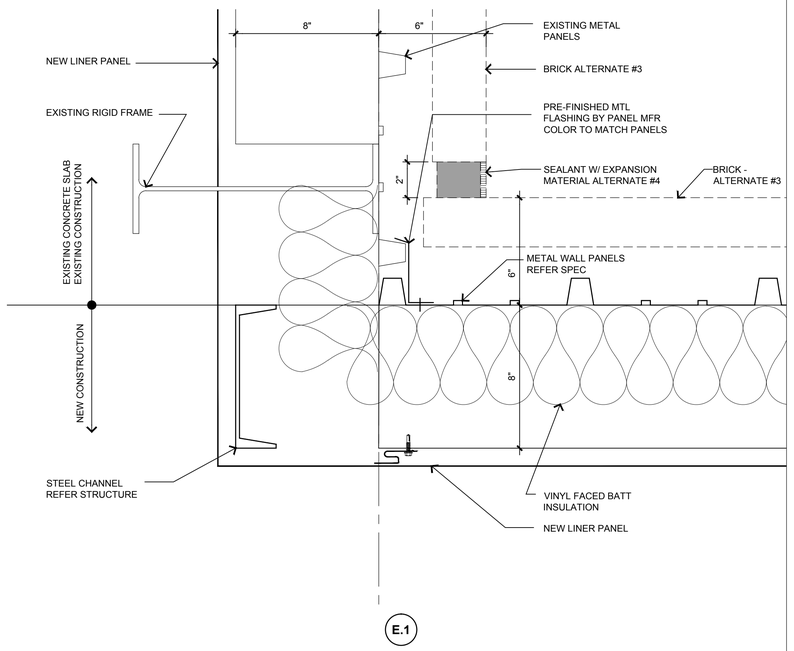

02 PLAN DETAIL

SCALE: 3"=1'-0" 01/A-101

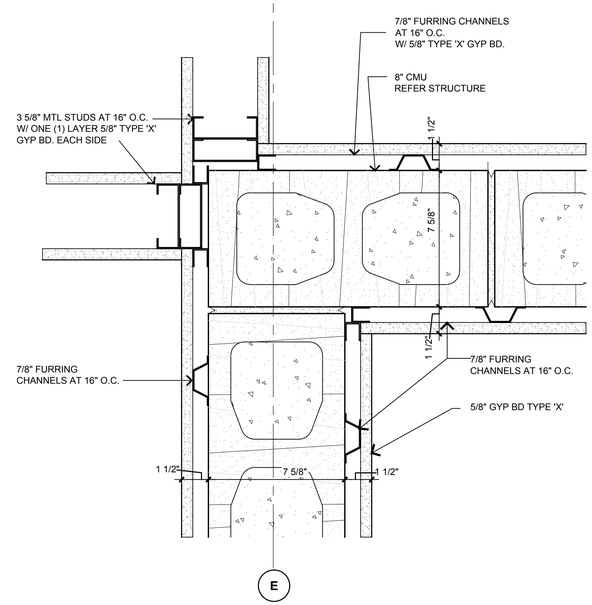

03 PLAN DETAIL

SCALE: 3"=1'-0" 01/A-101

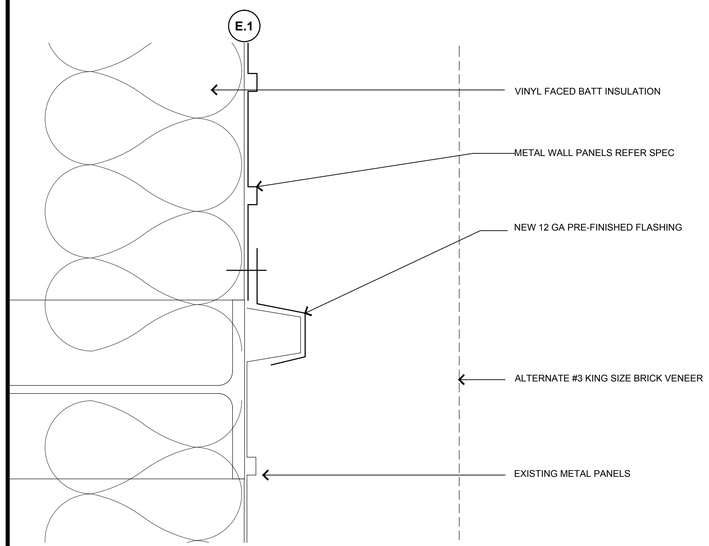

04 PLAN DETAIL

SCALE: 6"=1'-0" 001/A-101

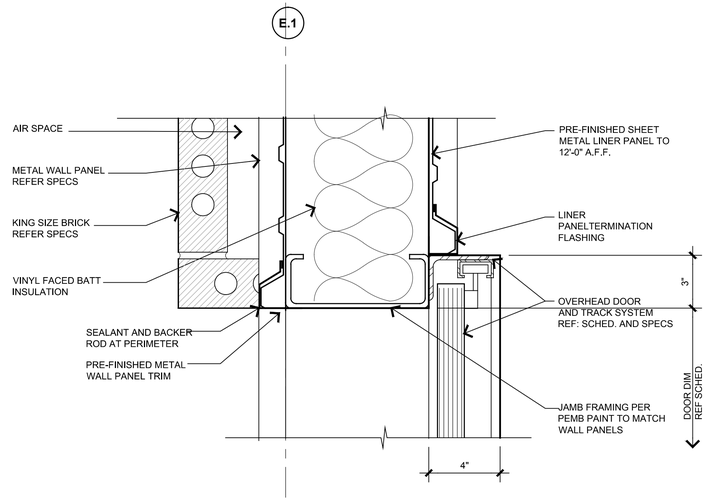

05 OVHD DOOR JAMB DETAIL

SCALE: 3"=1'-0"

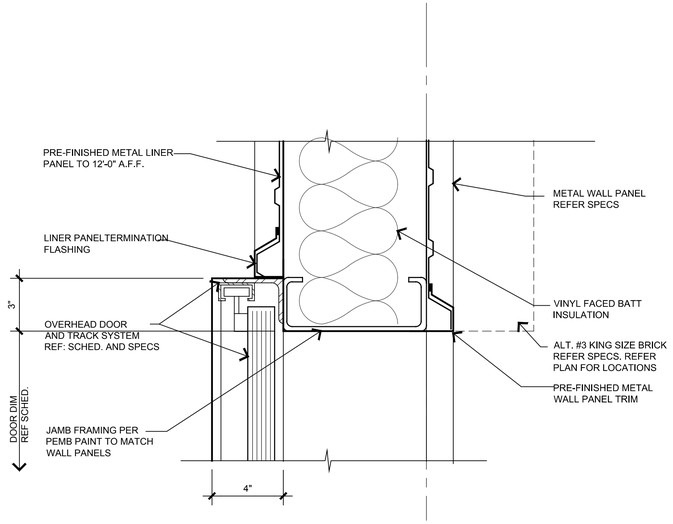

06 OVHD DOOR JAMB DETAIL W/O BRICK

SCALE: 3"=1'-0"

ARCHITECTS
IN
PARTNERSHIP

ARCHITECTS
INTERIOR DESIGNERS
PLANNERS

3220 MARSHALL AVENUE
NORMAN, OK 73072
TEL: 405.360.1300
FAX: 405.360.1431

SEAL:

STATE OF OKLAHOMA
GANG
4780
LICENSED ARCHITECT

08/08/2022

HENNESSEY FIRE DEPARTMENT

REMODEL/ADDITION

HENNESSEY, OKLAHOMA

501 S. MAIN STREET

REVISIONS

REV.	DATE	DESCRIPTION

PROJ. MANAGER: GL
DRAWN BY: STAFF
CHECKED BY: GL

DATE: 08/08/2022
PROJECT NO.: 2111

SHEET TITLE: PLAN DETAILS

SHEET NO.: A-502

8/8/2022 2:08:44 PM

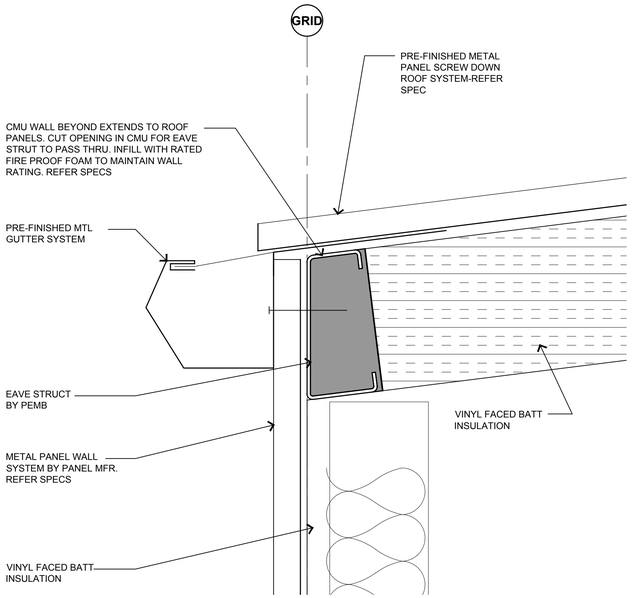

01 TYPICAL EAVE SECTION

SCALE: 3"=1'-0" 01/A-311

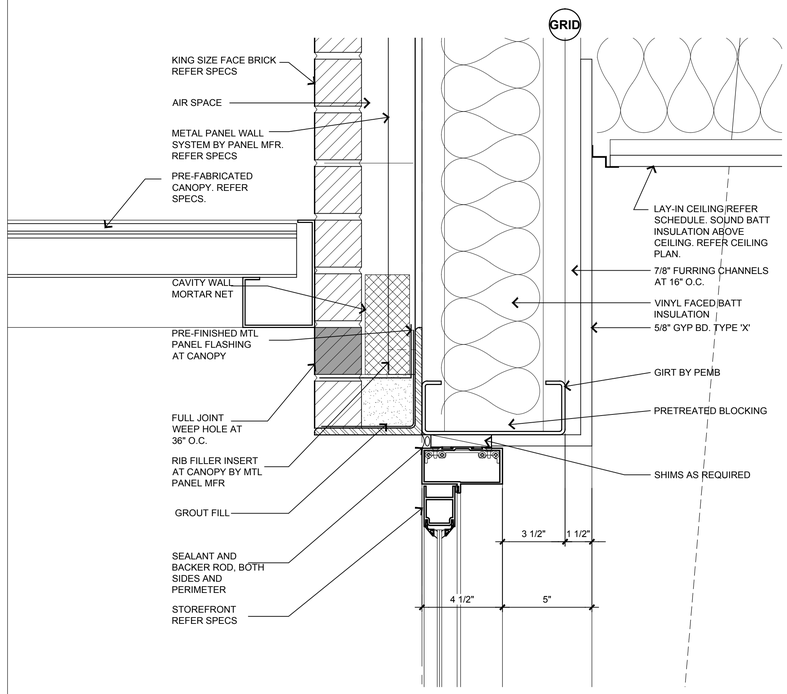

02 SECTION DETAIL

SCALE: 3"=1'-0" 04/A-311

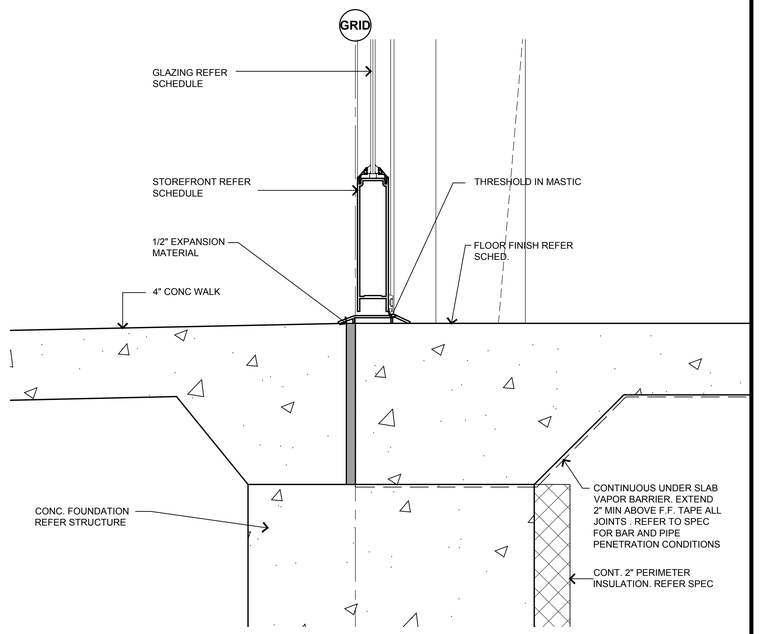

03 SILL SECTION

SCALE: 3"=1'-0" 01/A-311

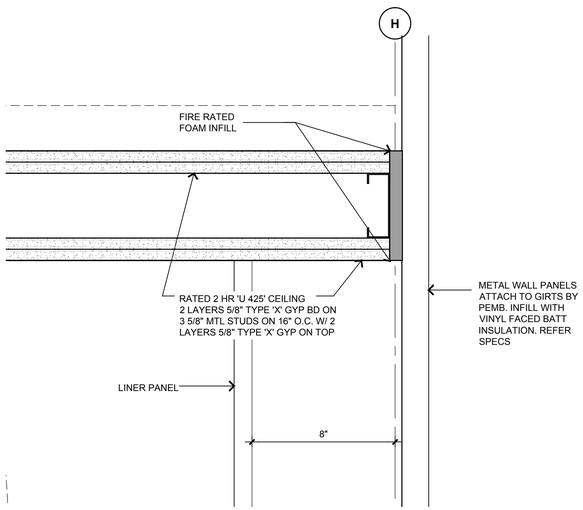

04 SECTION DETAIL

SCALE: 3"=1'-0" 02/A-311

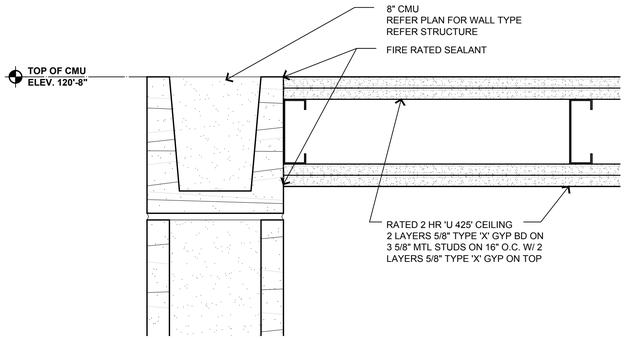

05 SECTION DETAIL

SCALE: 3"=1'-0" 02/A-411

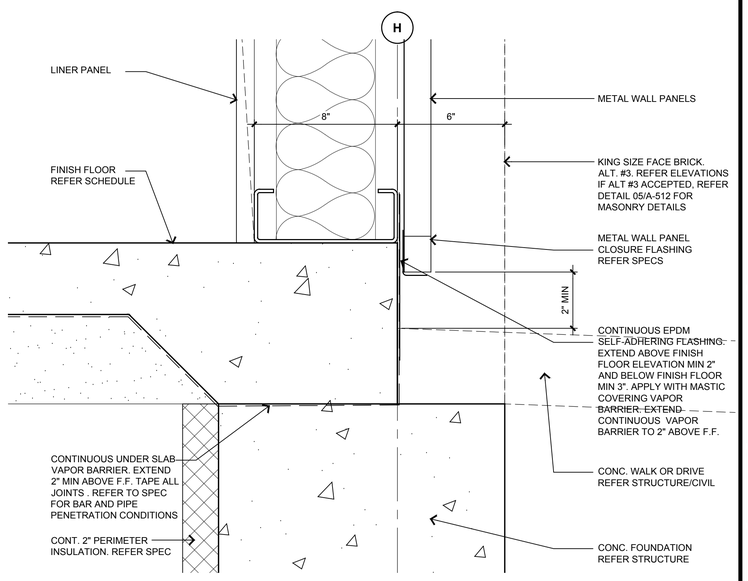

BASE SECTION AT INTERIOR LINER LOCATIONS

06 SCALE: 3"=1'-0" 02/A-311

ARCHITECTS IN PARTNERSHIP

ARCHITECTS
INTERIOR DESIGNERS
PLANNERS

3220 MARSHALL AVENUE
NORMAN, OK 73072
TEL: 405.360.1300
FAX: 405.360.1431

SEAL:

STATE OF OKLAHOMA GANG 4780 LICENSED ARCHITECT

08/08/2022

HENNESSEY FIRE DEPARTMENT

REMODEL/ADDITION

501 S. MAIN STREET

HENNESSEY, OKLAHOMA

REVISIONS

REV.	DATE	DESCRIPTION

PROJ. MANAGER: GL
DRAWN BY: STAFF
CHECKED BY: GL

DATE: 08/08/2022
PROJECT NO.: 2111

SHEET TITLE: VERTICAL DETAILS

SHEET NO.: A-511

8/8/2022 2:08:55 PM

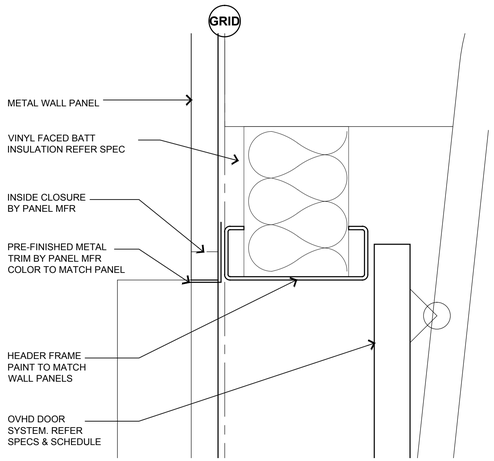

01 OVHD DOOR HEADER
SCALE: 3"=1'-0" 03/A-312

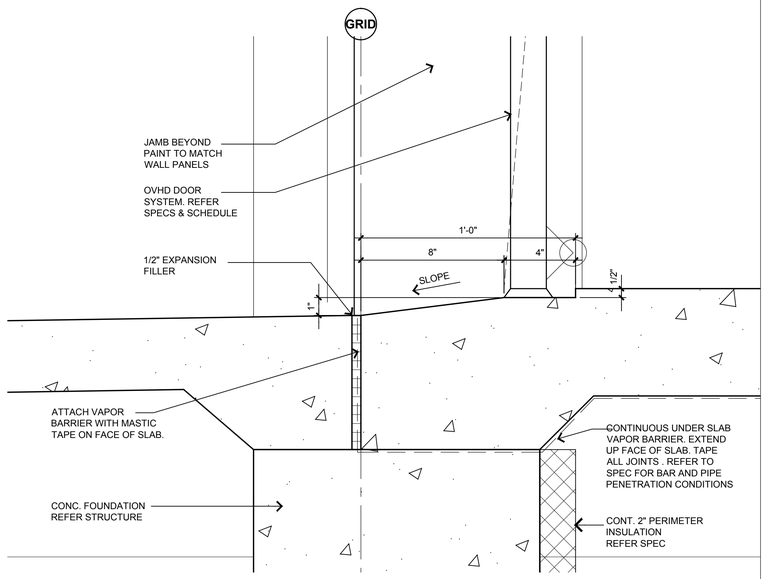

02 BASE DETAIL
SCALE: 3"=1'-0" 03/A-312

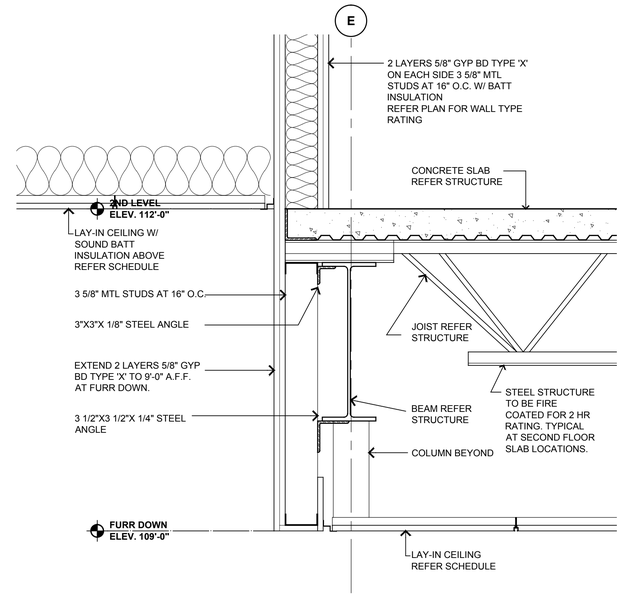

03 FURR DOWN SECTION
SCALE: 1 1/2"=1'-0" 01/A-301

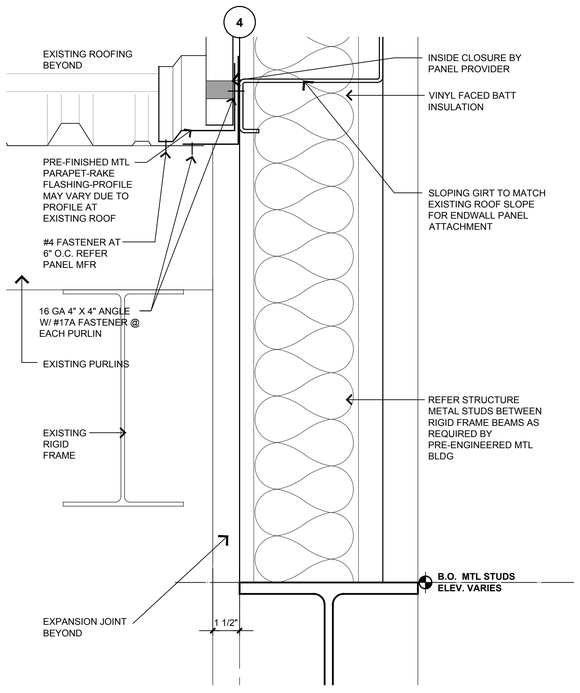

04 SECTION DETAIL
SCALE: 3"=1'-0" 02/A-312

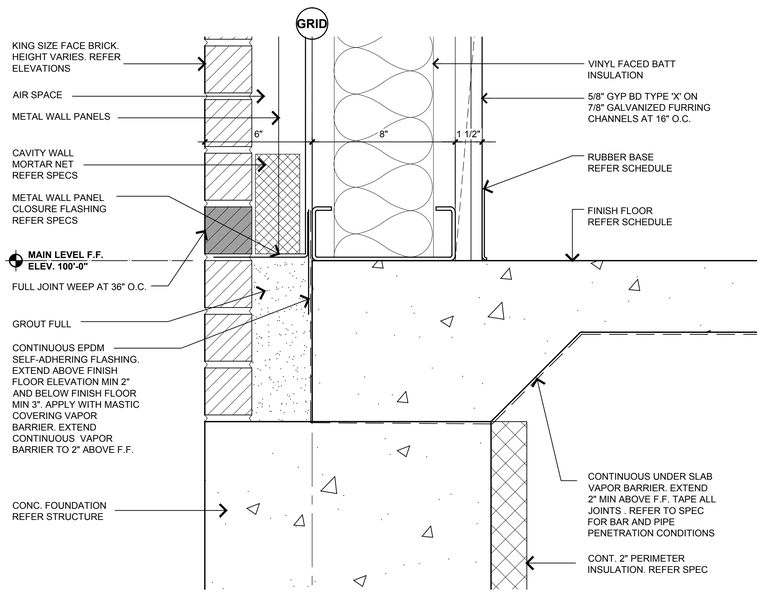

05 SECTION DETAIL
SCALE: 3"=1'-0" 01/A-313

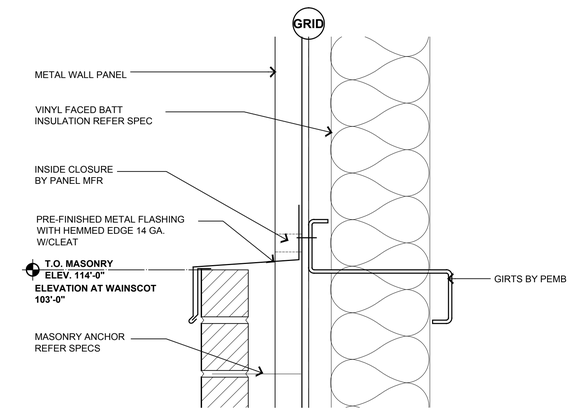

06 SECTION DETAIL
SCALE: 3"=1'-0" 01/A-311

ARCHITECTS IN PARTNERSHIP

ARCHITECTS
INTERIOR DESIGNERS
PLANNERS

3220 MARSHALL AVENUE
NORMAN, OK 73072
TEL: 405.360.1300
FAX: 405.360.1431

SEAL:
STATE OF OKLAHOMA
GANG
4780
LICENSED ARCHITECT
08/08/2022

HENNESSEY FIRE DEPARTMENT
REMODEL/ADDITION
501 S. MAIN STREET
HENNESSEY, OKLAHOMA

REVISIONS

REV.	DATE	DESCRIPTION

PROJ. MANAGER: GL
DRAWN BY: STAFF
CHECKED BY: GL

DATE: 08/08/2022
PROJECT NO.: 2111

SHEET TITLE: VERTICAL DETAILS
SHEET NO.: A-512

8/8/2022 2:09:10 PM

DOOR SCHEDULE

MARK	DOOR SIZE W	DOOR SIZE HT	DOOR SIZE THK	DOOR MAT'L	DOOR ELEV	DOOR SILL	DOOR GLAZING	FRAME MAT'L	FRAME ELEV	FRAME GLAZING	FRAME DETAIL HEAD	FRAME DETAIL JAMB	LABEL (MINUTES)	HARDWARE SET NO.	HARDWARE KEYSIDE RM. NO.	NOTE
101	3'-0"	7'-10"	1 3/4"	HM	C	03/A-602		HM	1		02/A-603	01/A-603 06/A-603		2.0	EXTR	
102a	3'-0"	7'-10"	1 3/4"	HM	C	03/A-602		HM	1		02/A-603	01/A-603 06/A-603		2.0	EXTR	
102b	14'-0"	14'-0"	-	-	F	02/A-512		-	1		01/A-512	05/A-602 06/A-502		12.0	EXTR	OVHD SECTIONAL DOOR-REFER SPEC
102c	14'-0"	14'-0"	-	-	F	02/A-512		-	1		01/A-512	05/A-502 06/A-502		12.0	EXTR	OVHD SECTIONAL DOOR-REFER SPEC
103a	3'-0"	7'-2"	1 3/4"	HM	C			HM	1		10/A-602	09/A-602	90 MIN	8.0	102	
103b	3'-0"	7'-10"	0'-1 3/4"	WD	D		G1	HM	1		05/A-602	04/A-602		8.0	104	
104a	3'-0"	7'-7"	1 3/4"	AL	A	03/A-511	G2	AL	1		02/A-511	01/A-501		1.0	EXTR	
104b	3'-0"	7'-7"	1 3/4"	AL	A	03/A-511	G2	AL	1		02/A-511	01/A-501		1.0	EXTR	
105	3'-0"	7'-10"	1 3/4"	WD	D		G1	HM	1		05/A-602	04/A-602		7.0	104	
106a	4'-0"	7'-10"	1 3/4"	HM	C	03/A-602		HM	1		09/A-603	07/A-603 08/A-603		2.0	EXTR	
106b	3'-0"	7'-2"	1 3/4"	HM	C			HM	1		10/A-602	09/A-602	90 MIN	9.0	102	
107a	4'-0"	7'-10"	1 3/4"	HM	C	03/A-602		HM	1		09/A-603	07/A-603 08/A-603		2.0	EXTR	
107b	3'-0"	7'-2"	1 3/4"	WD	D		G1	HM	1		05/A-602	04/A-602		11.0	106	
107c	3'-0"	7'-2"	1 3/4"	WD	D		G1	HM	1		05/A-602	04/A-602		11.0	106	
107d	16'-0"	2'-11"		STL	E						B/A-401	A/A-401		12.0		VERTICAL LIFT SECTIONAL DOOR-REFER SPEC
108	3'-0"	7'-2"	1 3/4"	WD	B			HM	1		07/A-602	08/A-602		10.0	106	SOUND PROOF DOOR
109	3'-0"	7'-2"	1 3/4"	WD	B			HM	1		07/A-602	08/A-602		10.0	106	SOUND PROOF DOOR
110	4'-0"	7'-2"	1 3/4"	HM	C			HM	1		02/A-602	01/A-602	90 MIN	6.0	102	
111	4'-0"	7'-2"	1 3/4"	HM	C			HM	1		02/A-602	01/A-602	90 MIN	6.0	102	
112	3'-0"	7'-2"	1 3/4"	HM	C			HM	1		12/A-602	11/A-602	90 MIN	5.0	107	FEMA RATED DOOR
113	3'-0"	7'-2"	1 3/4"	HM	C			HM	1		02/A-602	01/A-602	90 MIN	4.0	102	
114a	3'-0"	7'-2"	1 3/4"	HM	C	03/A-602		HM	1		09A-603	07/A-603 08/A-603		2.0	EXTR	
114b	3'-0"	7'-2"	1 3/4"	HM	C			HM	1		02/A-602	01/A-602	90 MIN	4.0	113	
114c	3'-0"	7'-2"	1 3/4"	HM	C			HM	1		11/A-603	10/A-603	90 MIN	4.0	107	
115a	4'-0"	7'-10"	1 3/4"	HM	C	03/A-602		HM	1		02/A-603	01/A-603		3.0	EXTR	
115b	3'-0"	7'-2"	1 3/4"	HM	C			HM	1		02/A-602	01/A-602	90 MIN	9.0	102	
116	3'-0"	7'-2"	1 3/4"	HM	C			HM	1		05/A-602	04/A-602		6.0	107	
201	3'-0"	7'-2"	1 3/4"	HM	C			HM	1		02/A-602	01/A-602	90 MIN	4.0	201	
202	3'-0"	7'-2"	1 3/4"	HM	C			HM	1		05/A-602	04/A-602		7.0	202	

GLAZING SCHEDULE

MARK	NOTE
G1	1/4" TEMPERED FLOAT GLASS, CLEAR
G2	1" INSULATED TEMPERED LOW-E GLASS, CLEAR

GENERAL DOOR AND WINDOW NOTES:

1. CONTRACTOR SHALL FIELD VERIFY DIMENSIONALLY ALL OPENINGS PRIOR TO MANUFACTURING WINDOW AND DOOR FRAMES.
2. ALL DOOR AND FRAME ASSEMBLIES AND INSTALLATIONS SHALL BE IN STRICT ACCORDANCE WITH INTERNATIONAL LIFE SAFETY CODES GOVERNING EDITION. ALL EXTERIOR DOORS SHALL BE COMPLETE WITH PROPER THRESHOLDS, ASTRAGALS, WEATHER-STRIPING, HOLDS, AND DOOR BOTTOMS.
3. ALL GLAZING IN HAZARDOUS AREAS MUST MEET THE REQUIREMENTS FOR SAFETY GLAZING UNDER IBC 2406.
4. SOLID GROUT ALL HOLLOW METAL FRAME IN MASONRY CONSTRUCTION.
5. ALL EXTERIOR WINDOW FRAME ELEVATIONS ARE VIEWED FROM THE EXTERIOR OF THE BUILDING.
6. GRIND ALL WELDS IN HOLLOW METAL FRAMES SMOOTH.
7. ALL EXTERIOR HOLLOW METAL DOOR FRAMES AND EXTERIOR FACE OF HOLLOW METAL DOORS TO RECEIVE PAINT. PAINT COLOR TBD.
8. ALL GLASS IN THIS PROJECT IS TEMPERED SAFETY GLASS UNDER PROVISIONS OF IBC 2406 UNLESS OTHERWISE NOTED. REFER TO SPECIFICATIONS.
9. REFER TO TYPICAL DETAIL 03/A-602AT EXTERIOR DOOR THRESHOLDS.

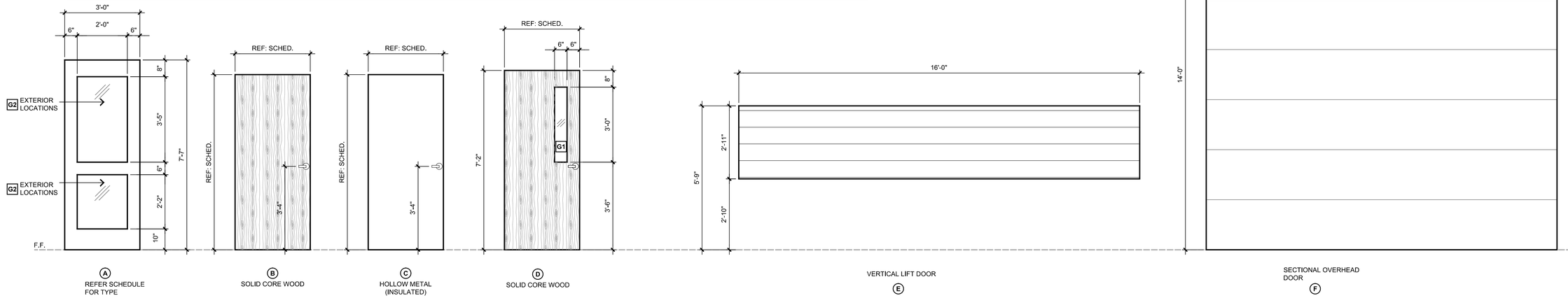

A REFER SCHEDULE FOR TYPE

B SOLID CORE WOOD

C HOLLOW METAL (INSULATED)

D SOLID CORE WOOD

VERTICAL LIFT DOOR (E)

SECTIONAL OVERHEAD DOOR (F)

01 DOOR ELEVATIONS

SCALE: 1/2"=1'-0"

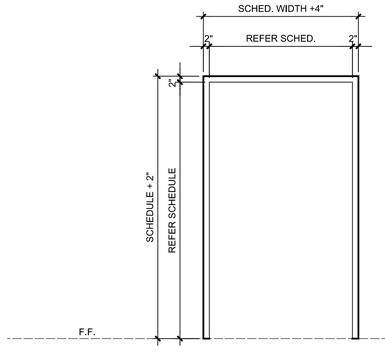

01

NOTE:
REFER DOOR SCHEDULE FOR TYPE AND DETAILS.

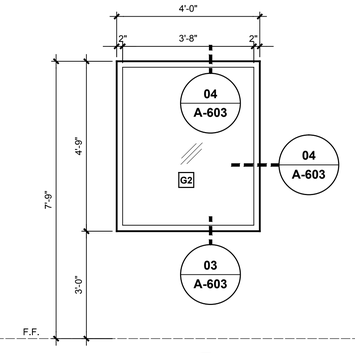

A ALUMINUM

02 DOOR/WINDOW FRAME ELEVATIONS

SCALE: 1/2"=1'-0"

ARCHITECTS IN PARTNERSHIP

ARCHITECTS
INTERIOR DESIGNERS
PLANNERS

3220 MARSHALL AVENUE
NORMAN, OK 73072
TEL: 405.360.1300
FAX: 405.360.1431

SEAL:



08/08/2022

HENNESSEY FIRE DEPARTMENT
REMODEL/ADDITION
501 S. MAIN STREET
HENNESSEY, OKLAHOMA

REVISIONS

REV.	DATE	DESCRIPTION

PROJ. MANAGER: GL
DRAWN BY: STAFF
CHECKED BY: GL

DATE: 08/08/2022
PROJECT NO.: 2111

SHEET TITLE: DOOR SCHEDULE & DOOR FRAMES
SHEET NO.: A-601

8/8/2022 2:09:24 PM

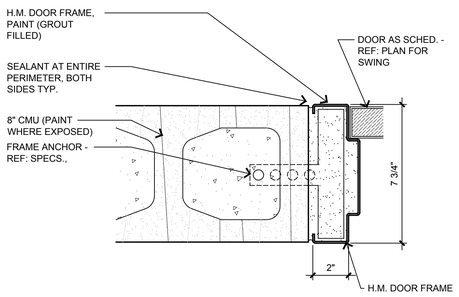

01 JAMB DETAIL
SCALE: 3"=1'-0"

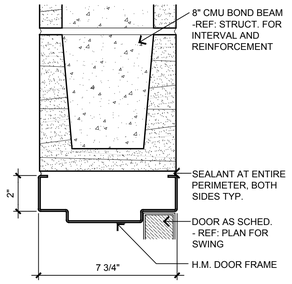

02 HEADER DETAIL
SCALE: 3"=1'-0"

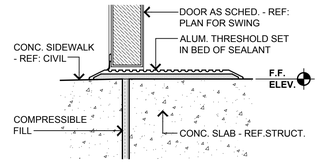

03 SILL DETAIL
SCALE: 3"=1'-0"

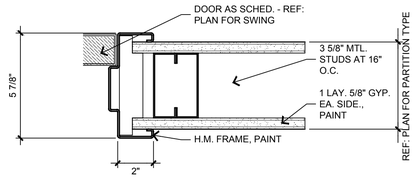

04 JAMB DETAIL
SCALE: 3"=1'-0"

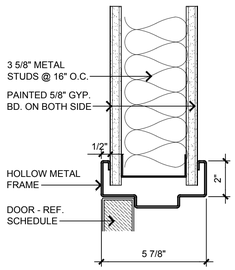

05 HEADER DETAIL
SCALE: 3"=1'-0"

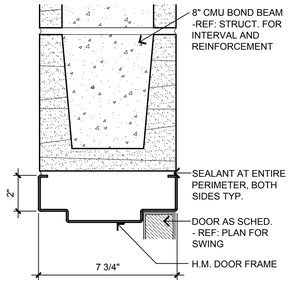

06 HEADER DETAIL
SCALE: 3"=1'-0"

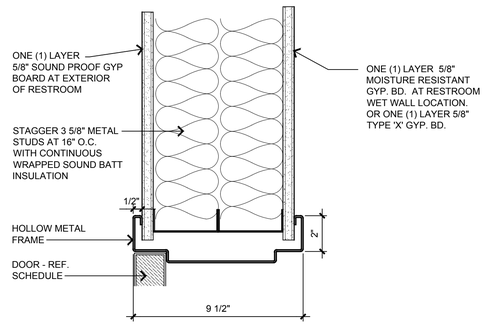

07 HEADER DETAIL
SCALE: 3"=1'-0"

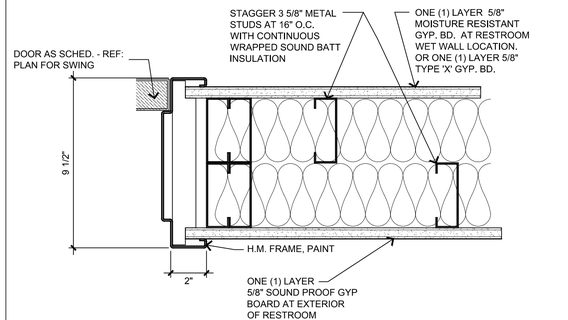

08 JAMB DETAIL
SCALE: 3"=1'-0"

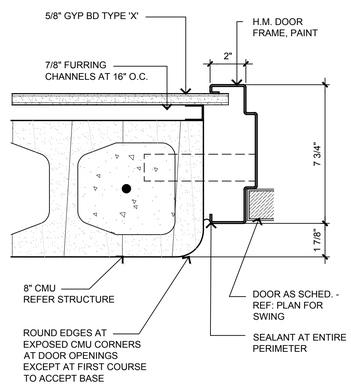

09 JAMB DETAIL
SCALE: 3"=1'-0"

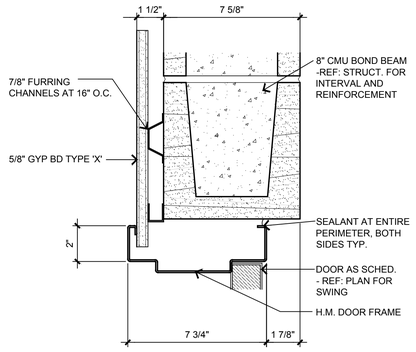

10 HEADER DETAIL
SCALE: 3"=1'-0"

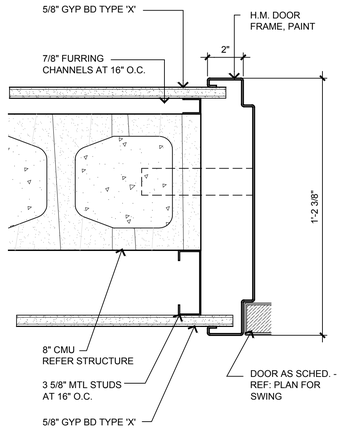

11 JAMB DETAIL
SCALE: 3"=1'-0"

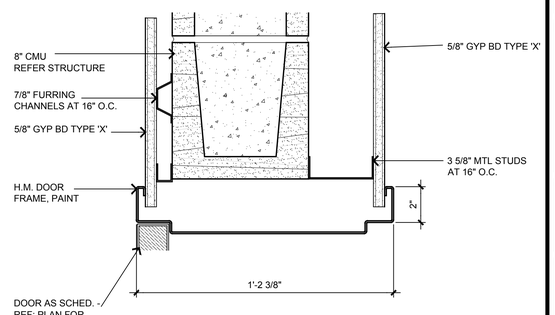

12 HEADER DETAIL
SCALE: 3"=1'-0"

ARCHITECTS IN PARTNERSHIP

ARCHITECTS
INTERIOR DESIGNERS
PLANNERS

3220 MARSHALL AVENUE
NORMAN, OK 73072
TEL: 405.360.1300
FAX: 405.360.1431

SEAL:

STATE OF OKLAHOMA GANG 4780 LICENSED ARCHITECT

08/08/2022

HENNESSEY FIRE DEPARTMENT
REMODEL/ADDITION
HENNESSEY, OKLAHOMA
501 S. MAIN STREET

REVISIONS

REV.	DATE	DESCRIPTION

PROJ. MANAGER:	GL
DRAWN BY:	STAFF
CHECKED BY:	GL
DATE:	08/08/2022
PROJECT NO.:	2111

SHEET TITLE: DOOR JAMB/HEADER DETAILS

SHEET NO.: A-602

8/8/2022 2:09:39 PM

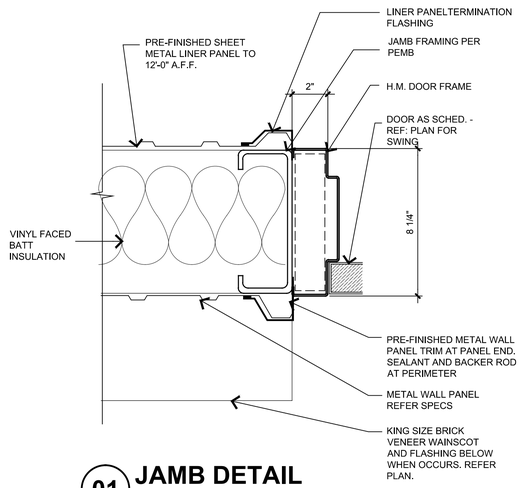

01 JAMB DETAIL
SCALE: 3"=1'-0"

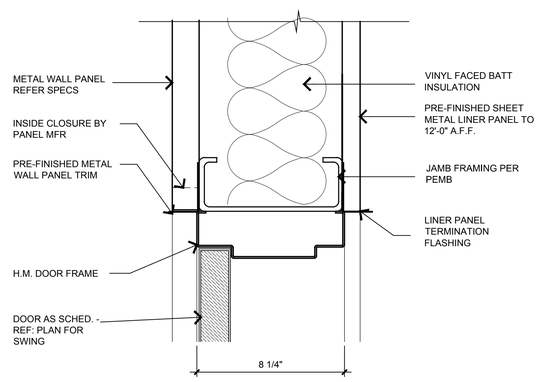

02 HEADER DETAIL
SCALE: 3"=1'-0"

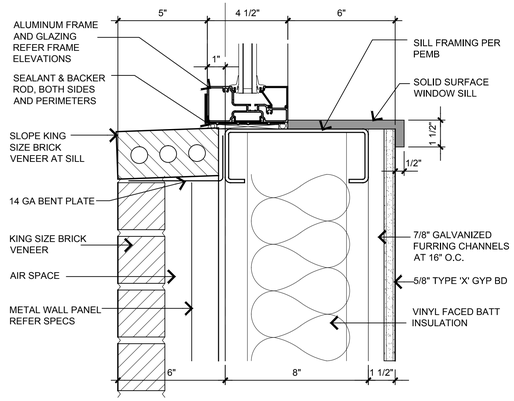

03 SILL DETAIL
SCALE: 3"=1'-0"

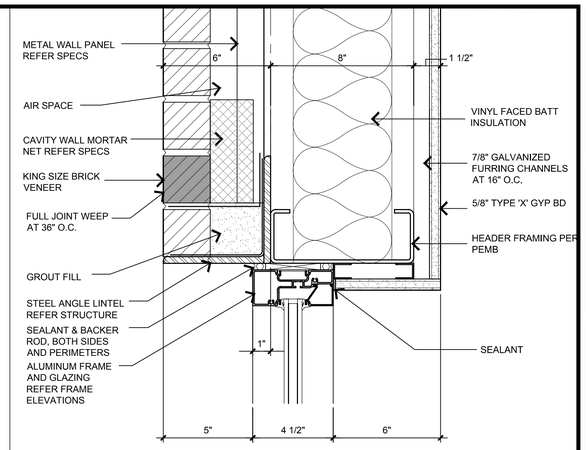

04 HEADER DETAIL
SCALE: 3"=1'-0"

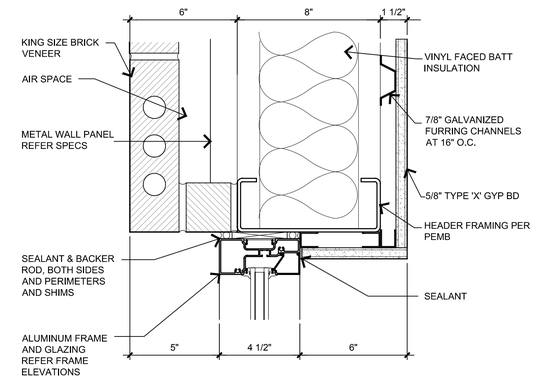

05 JAMB DETAIL
SCALE: 3"=1'-0"

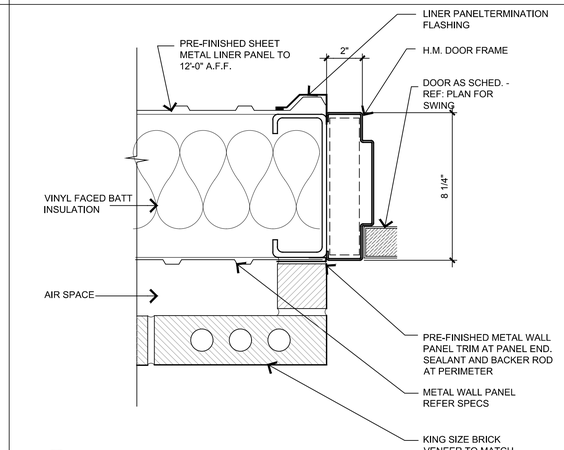

06 JAMB DETAIL
SCALE: 3"=1'-0"

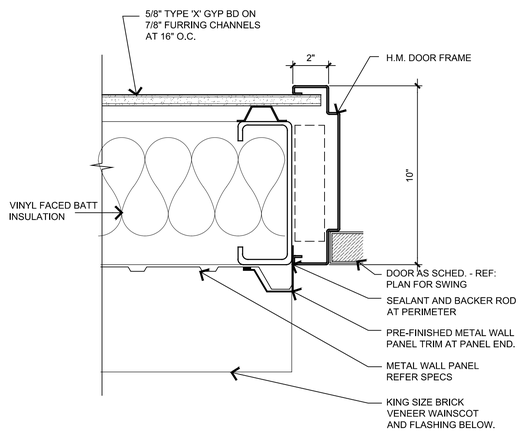

07 JAMB DETAIL
SCALE: 3"=1'-0"

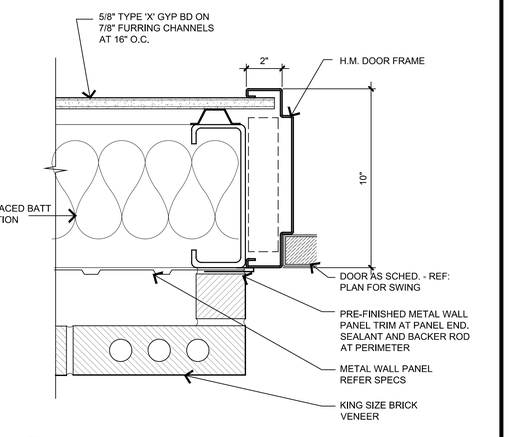

08 JAMB DETAIL
SCALE: 3"=1'-0"

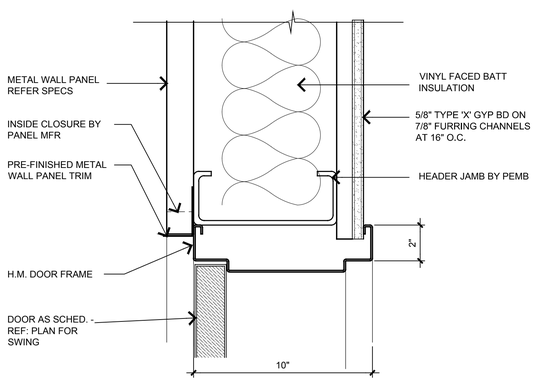

09 HEADER DETAIL
SCALE: 3"=1'-0"

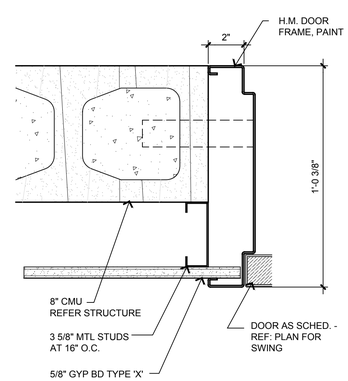

10 JAMB DETAIL
SCALE: 3"=1'-0"

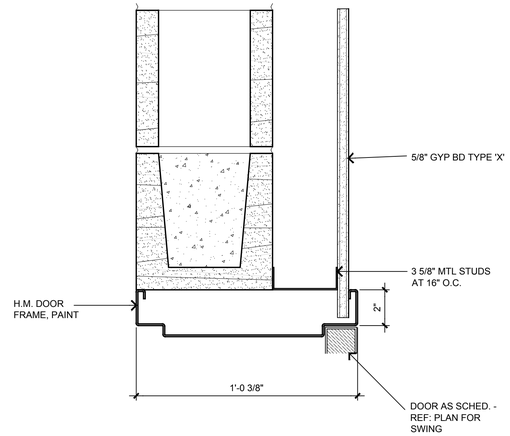

11 HEADER DETAIL
SCALE: 3"=1'-0"

ARCHITECTS IN PARTNERSHIP

ARCHITECTS
INTERIOR DESIGNERS
PLANNERS

3220 MARSHALL AVENUE
NORMAN, OK 73072
TEL: 405.360.1300
FAX: 405.360.1431

SEAL:

STATE OF OKLAHOMA
GANG
4780
LICENSED ARCHITECT

08/08/2022

HENNESSEY FIRE DEPARTMENT
REMODEL/ADDITION
HENNESSEY, OKLAHOMA
501 S. MAIN STREET

REVISIONS

REV.	DATE	DESCRIPTION

PROJ. MANAGER: GL
DRAWN BY: STAFF
CHECKED BY: GL

DATE: 08/08/2022
PROJECT NO.: 2111

SHEET TITLE: DOOR JAMB/HEADER DETAILS
SHEET NO.: A-603

8/8/2022 2:09:49 PM

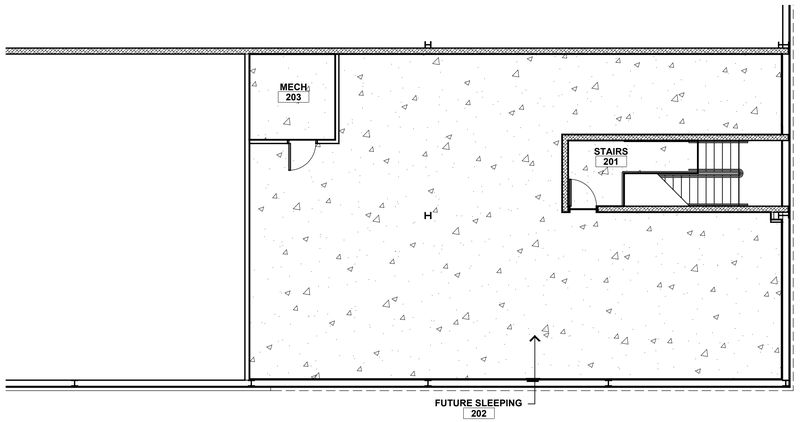

02 UPPER LEVEL FLOOR FINISH PLAN

SCALE: 1/8"=1'-0"

NORTH

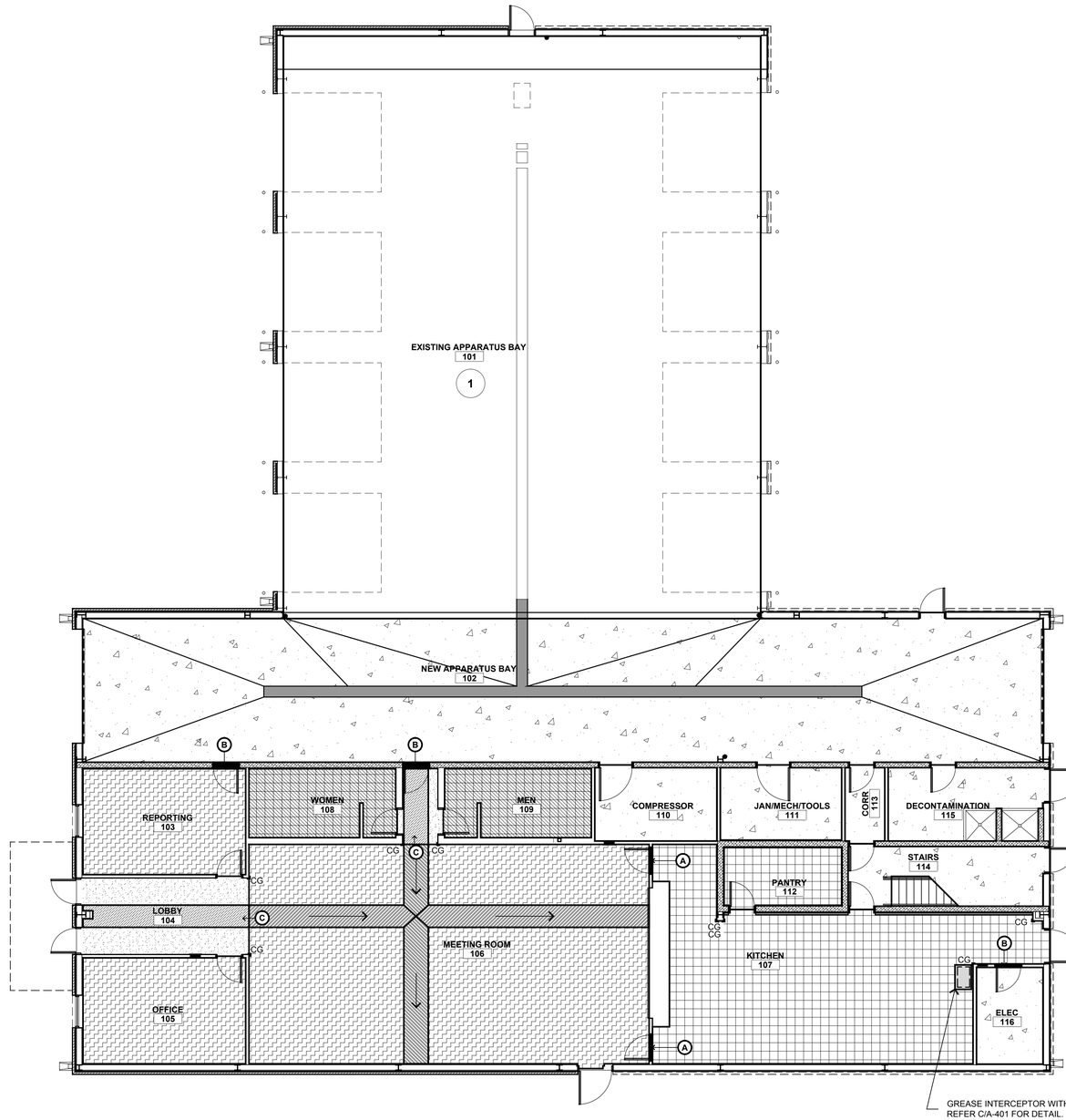

01 MAIN LEVEL FLOOR PLAN

SCALE: 1/8"=1'-0"

NORTH

FINISH LEGEND:

	SC: SEALED CONCRETE
	PFT-1: PORCELAIN TILE INSTALLATION: ASHLAR
	PFT-2: PORCELAIN QUARRY TILE INSTALLATION: SQUARE GRID
	WCPT-1: WALK-OFF CARPET INSTALLATION: ASHLAR
	WCPT-2: WALK-OFF CARPET INSTALLATION: MONOLITHIC
	LVT-1: LUXURY VINYL TILE INSTALLATION: ASHLAR
	LVT-2 : LUXURY VINYL TILE INSTALLATION: MONOLITHIC (PATTERN TO FOLLOW DIRECTION OF ARROW)
CG	STAINLESS STEEL CORNER GUARD

FINISH NOTES:

1. SEE A-710 FOR FINISH AND COLOR SCHEDULES.

KEY NOTES:

1	EXISTING FLOORING TO REMAIN. NO WORK HERE.

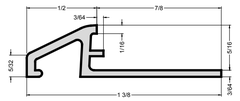

A SCHLUTER AEU80

NTS

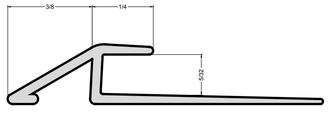

B SCHLUTER VPU 40 ATGB

NTS



C SCHLUTER VPS 40 ATGB

NTS

ARCHITECTS IN PARTNERSHIP

ARCHITECTS
INTERIOR DESIGNERS
PLANNERS

3220 MARSHALL AVENUE
NORMAN, OK 73072
TEL: 405.360.1300
FAX: 405.360.1431

SEAL:



08/08/2022

HENNESSEY FIRE DEPARTMENT

REMODEL/ADDITION

501 S. MAIN STREET

HENNESSEY, OKLAHOMA

REVISIONS

REV.	DATE	DESCRIPTION

PROJ. MANAGER:	GL
DRAWN BY:	FR
CHECKED BY:	GL

DATE: 08/08/2022

PROJECT NO.: 2111

SHEET TITLE: FINISH FLOOR PLAN

SHEET NO.: A-701

8/8/2022 2:09:59 PM

ROOM FINISH SCHEDULE

ROOM NO.	ROOM NAME	FLOOR	BASE	WALLS								CEILING		METAL DOORS /FRAMES	NOTE	ROOM NO.
				NORTH		EAST		SOUTH		WEST						
		MATERIAL	MATERIAL	MATERIAL	FINISH	MATERIAL	FINISH	MATERIAL	FINISH	MATERIAL	FINISH	MATERIAL	FINISH			
101	EXISTING APPARATUS BAY	-	-	-	-	-	-	-	-	-	-	-	-	-		101
102	NEW APPARATUS BAY	SC	SC	GYP	PT-3	GYP	PT-3	CMU	PT-3	GYP	PT-3	-	-	PT-2		102
103	REPORTING	LVT-1	RB	GYP	PT-1	GYP	PT-1	GYP	PT-1	GYP	PT-1	ACT-1, ACG	-	PT-2		103
104	LOBBY	WCPT-1, WCPT-2	RB	GYP	PT-1	GYP	PT-1	GYP	PT-1	GYP	PT-1	ACT-1, ACG	-	PT-2		104
105	OFFICE	LVT-1	RB	GYP	PT-1	GYP	PT-1	GYP	PT-1	GYP	PT-1	ACT-1, ACG	-	PT-2		105
106	MEETING ROOM	LVT-1, LVT-2	RB	GYP	PT-1	GYP	PT-1	GYP	PT-1	GYP	PT-1	-	-	PT-2		106
107	KITCHEN	PFT-2	PFT-3, PFT-4, PFT-5	MRGYP	PT-1	MRGYP	PT-1	MRGYP	PT-1	MRGYP	PT-1	ACT-2, ACG	-	PT-2		107
108	WOMEN	PFT-1	CWT-2, CWT-3	MRGYP	PT-1	MRGYP	PT-3, CWT-1	MRGYP	PT-3, CWT-1	MRGYP	PT-3, CWT-1	MRGYP	PT-3	PT-2		108
109	MEN	PFT-1	CWT-2, CWT-3	MRGYP	PT-3, CWT-1	MRGYP	PT-3, CWT-1	MRGYP	PT-3, CWT-1	MRGYP	PT-3, CWT-1	MRGYP	PT-3	PT-2		109
110	COMPRESSOR	SC	RB	CMU	PT-1	GYP	PT-1	GYP	PT-1	GYP	PT-1	ACT-1, ACG	-	PT-2		110
111	JANITOR	SC	RB	CMU	PT-1	MRGYP	PT-1	MRGYP	PT-1	MRGYP	PT-1	ACT-1, ACG	-	PT-2		111
112	PANTRY	PFT-2	PFT-3, PFT-4, PFT-5	GYP	PT-1	GYP	PT-1	GYP	PT-1	GYP	PT-1	ACT-1, ACG	-	PT-2		112
113	CORRIDOR	SC	RB	GYP	PT-1	GYP	PT-1	GYP	PT-1	GYP	PT-1	ACT-1, ACG	-	PT-2		113
114	STAIRS	SC	RB	CMU	PT-1	CMU	PT-1	CMU	PT-1	CMU	PT-1	-	-	PT-2		114
115	DECONTAMINATION	SC	RB	CMU	PT-1	CMU	PT-1	CMU	PT-1	MRGYP	PT-1	ACT-2, ACG	-	PT-2		115
116	ELECTRICAL	SC	RB	GYP	-	GYP	-	GYP	-	GYP	-	ACT-2, ACG	-	PT-2		116
201	STAIRS	SC	RB	CMU	PT-1	CMU	PT-1	CMU	PT-1	CMU	PT-1	ACT-1, ACG	-	PT-2		
202	FUTURE SLEEPING	SC	RB	GYP	-	GYP	-	GYP	-	GYP	-	NOT FINISHED OUT	-	-		
203	MECHANICAL	SC	RB	GYP	-	GYP	-	GYP	-	GYP	-	NOT FINISHED OUT	-	-		
ROOM NO.	ROOM NAME	MATERIAL	MATERIAL	MATERIAL	FINISH	MATERIAL	FINISH	MATERIAL	FINISH	MATERIAL	FINISH	MATERIAL	FINISH	METAL DOORS /FRAMES	NOTE	ROOM NO.
		FLOOR	BASE	NORTH		EAST		SOUTH		WEST		CEILING				
				WALLS												

01 FINISH SCHEDULE

COLOR SCHEDULE

ABBREV	DESCRIPTION	MANUFACTURER	SERIES/COLLECTION	COLOR	SIZE	NOTES
ACG	ACOUSTICAL CEILING GRID	ROCKFON	CHICAGO METALLIC 260 ALUMINUM CAP	WHITE	15/16	
ACT-1	ACOUSTICAL TILE	ROCKFON	SONAR SQ 16100	WHITE.	2 X 2	
ACT-2	ACOUSTICAL TILE	ROCKFON	HYGENIC PLUS SQ31100	WHITE.	2 X 2	
CWT-1	CERAMIC WALL TILE	EMSER	CITIZEN F26CITIRE1224LP	RESIDENT SEMI-GLOSS	12 X 24	
CWT-2	CERAMIC WALL TILE	EMSER	CITIZEN	RESIDENT SEMI-GLOSS	6 X 12	
CWT-3	CERAMIC WALL TILE	EMSER	CITIZEN INSIDE & OUTSIDE CORNERS	RESIDENT SEMI-GLOSS	1 X 6	
GRT-1	GROUT	LATICRETE	EPOXY	24 NATURAL GREY	3/16" GRT JOINT	
GRT-2	GROUT	LATICRETE	EPOXY	45 RAVEN	3/16" GRT JOINT	
LVT-1	LUXURY VINYL TILE	MANNINGTON	NO RESERVATIONS XPRESS / STONE	AUDACIOUS	12 X 24	
LVT-2	LUXURY VINYL TILE	MANNINGTON	NO RESERVATIONS XPRESS / ABSTRACT	DYNAMIC	6 X 36	
MRGYP	MOISTURE RESIST GYPSUM BRD.	-	-	-	-	
PFT-1	PORCELAIN FLOOR TILE	EMSER	POCONO	OAK	6 X 24	
PFT-2	PORCELAIN FLOOR TILE	CROSSVILLE	CROSS COLORS MINGLES (CTS)	A675 STONEHENGE	12 X 12	
PFT-3	PORCELAIN FLOOR TILE	CROSSVILLE	CROSS COLORS MINGLES	A675/.10106ISCS	1 X 6	
PFT-4	PORCELAIN FLOOR TILE	CROSSVILLE	CROSS COLORS MINGLES	A675/.10608CBS	6 X 8	
PFT-5	PORCELAIN FLOOR TILE	CROSSVILLE	CROSS COLORS MINGLES	A675/.1PCL3689S A675/.1PCR3689S	6 X 8	
PT-1	PAINT	PAINT	BENJAMIN MOORE	SEAPEARL 961	-	
PT-2	PAINT	PAINT	BENJAMIN MOORE	GRAY HUSKIE 1473	-	
PT-3	PAINT	EPOXY PAINT	BENJAMIN MOORE	SEAPEARL 961	-	
RB	RUBBER BASE	TARKETT	TA4	GATEWAY WG	0'-4"	
SS	SOLID SURFACE	CORIAN	-	DOESKIN	-	
STN-1	STAIN	MINWAX	PERFORMANCE SERIES OIL-BASED	CLASSIC GRAY MW 271	-	-
WCPT-1	WALK-OFF CARPET	SHAW	STEPPIN' OUT	CHARCOAL 31549		
WCPT-2	WALK-OFF CARPET	SHAW	STEPPIN' OUT	RED 31850		

02 COLOR SCHEDULE

ARCHITECTS IN PARTNERSHIP

ARCHITECTS
INTERIOR DESIGNERS
PLANNERS

3220 MARSHALL AVENUE
NORMAN, OK 73072
TEL: 405.360.1300
FAX: 405.360.1431

SEAL:

STATE OF OKLAHOMA
GANG
4780
LICENSED ARCHITECT

08/08/2022

HENNESSEY FIRE DEPARTMENT
REMODEL/ADDITION
501 S. MAIN STREET
HENNESSEY, OKLAHOMA

REVISIONS

REV.	DATE	DESCRIPTION

PROJ. MANAGER: GL
DRAWN BY: FMR
CHECKED BY: GL

DATE: 08/08/2022
PROJECT NO.: 2111

SHEET TITLE: FINISH & COLOR SCHEDULES
SHEET NO.: A-710

8/8/2022 2:10:09 PM

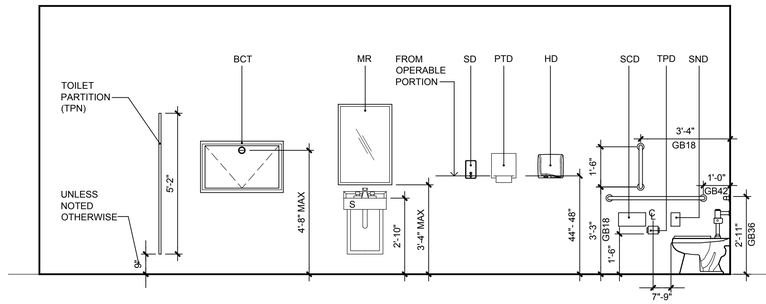

A TYP. RESTROOM ACCESSORIES MOUNTING HEIGHTS

SCALE: 3/8"=1'-0"

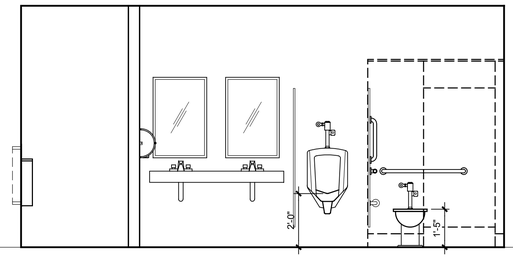

01 MEN'S RESTROOM - 109

SCALE: 3/8"=1'-0" 01/A-401

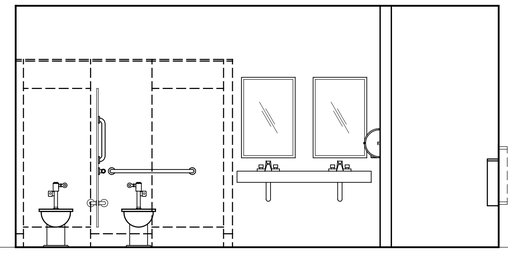

02 WOMEN'S RESTROOM - 108

SCALE: 3/8"=1'-0" 01/A-401

ACCESSORIES LEGEND:	
CH	COAT HOOK BOBRICK B-549
GB18	GRAB BAR 18" BOBRICK B-5806
GB36	GRAB BAR 36" BOBRICK B-5806
GB42	GRAB BAR 42" BOBRICK B-5806
MR	MIRROR BOBRICK B-169
PTD	PAPER TOWEL DISPENER BOBRICK B-9262
S	SINK SEE PLUMBING SCHEDULE PANNELL ASSOCIATES PROJECT #05312022-26A
TR	TRASH RECEPTACLE BOBRICK B-9279
TPD	TOILET PAPER DISPENSER BOBRICK B-540
TPN	TOILET PARTITION SCRANTON ECLIPSE BLACK RB

LEGEND:	
FE	FINISHED END
NIC	NOT IN CONTRACT
OFCI	OWNER FURNISHED CONTRACTOR INSTALLED
OF	OWNER FURNISHED
OH	OTHER HAND

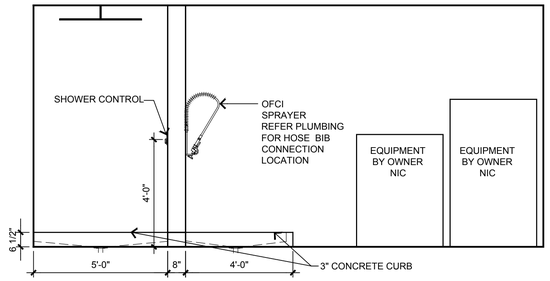

03 DECONTAMINATION - 115

SCALE: 3/8"=1'-0" 02/A-401

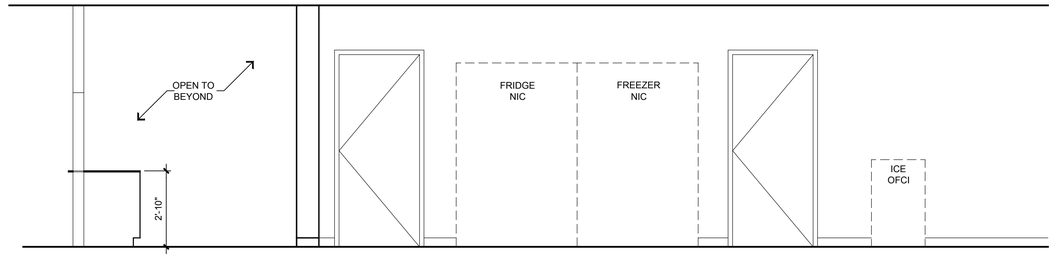

04 KITCHEN - 107 NORTH

SCALE: 3/8"=1'-0" 02/A-401

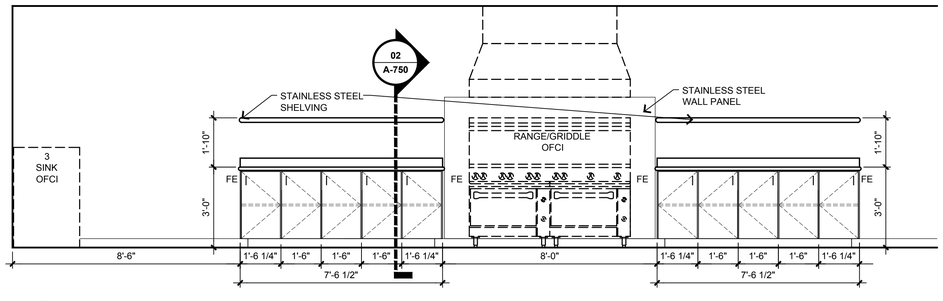

05 KITCHEN - 107 SOUTH

SCALE: 3/8"=1'-0" 02/A-401

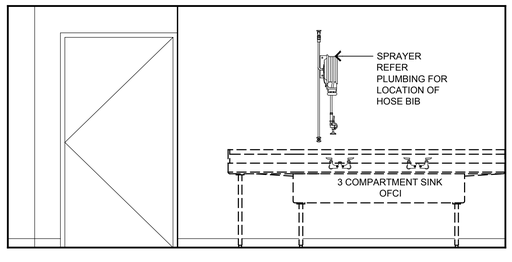

06 KITCHEN - 107 WEST

SCALE: 3/8"=1'-0" 02/A-401

ARCHITECTS IN PARTNERSHIP

ARCHITECTS
INTERIOR DESIGNERS
PLANNERS

3220 MARSHALL AVENUE
NORMAN, OK 73072
TEL: 405.360.1300
FAX: 405.360.1431

SEAL:



08/08/2022

HENNESSEY FIRE DEPARTMENT

REMODEL/ADDITION

HENNESSEY, OKLAHOMA

501 S. MAIN STREET

REVISIONS		
REV.	DATE	DESCRIPTION

PROJ. MANAGER: GL
DRAWN BY: FR
CHECKED BY: GL

DATE: 08/08/2022
PROJECT NO.: 2111

SHEET TITLE: INTERIOR ELEVATIONS

SHEET NO.: A-741

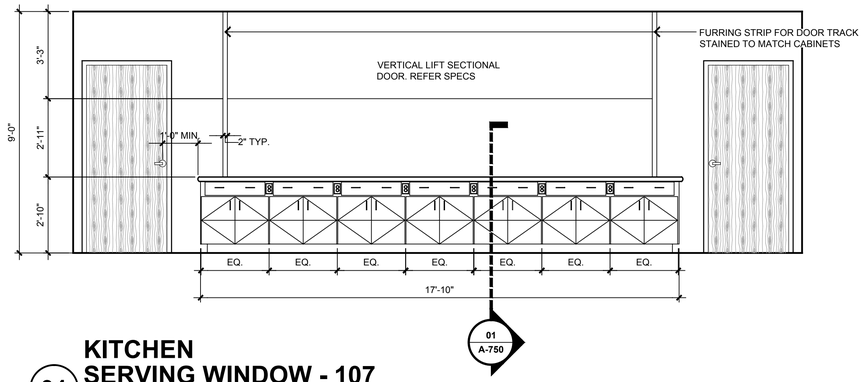

01 KITCHEN SERVING WINDOW - 107

SCALE: 3/8"=1'-0" 02/A-401

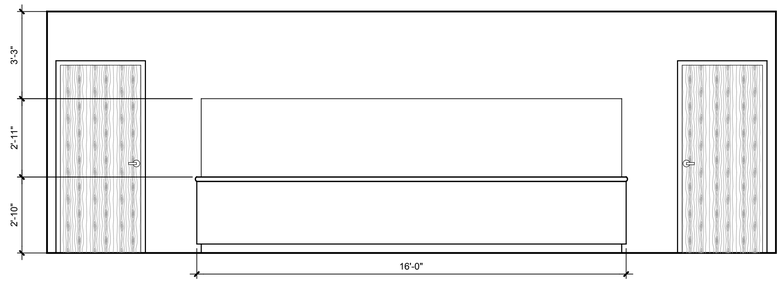

02 MEETING ROOM SERVING WINDOW - 106

SCALE: 3/8"=1'-0" 02/A-401

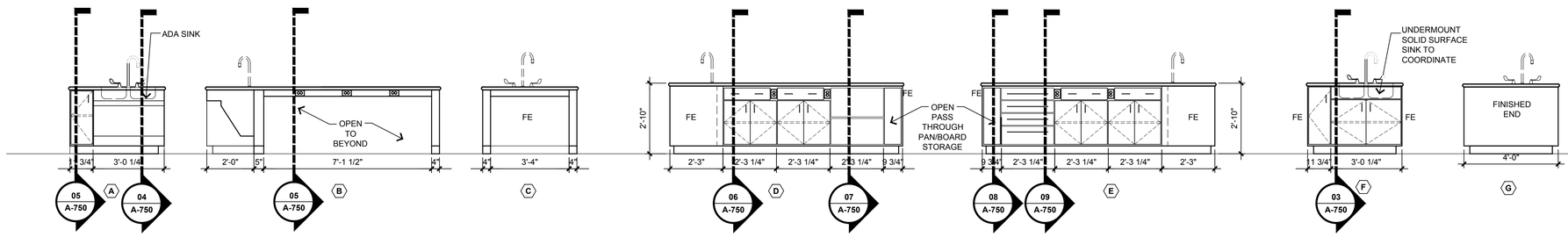

03 KITCHEN ISLAND - 107

SCALE: 3/8"=1'-0" 02/A-401

LEGEND:	
FE	FINISHED END
NIC	NOT IN CONTRACT
OFCI	OWNER FURNISHED CONTRACTOR INSTALLED
OH	OTHER HAND

ARCHITECTS IN PARTNERSHIP

ARCHITECTS
INTERIOR DESIGNERS
PLANNERS

3220 MARSHALL AVENUE
NORMAN, OK 73072
TEL: 405.360.1300
FAX: 405.360.1431

SEAL:



08/08/2022

HENNESSEY FIRE DEPARTMENT

REMODEL/ADDITION

HENNESSEY, OKLAHOMA

501 S. MAIN STREET

REVISIONS

REV.	DATE	DESCRIPTION

PROJ. MANAGER: GL
DRAWN BY: FR
CHECKED BY: GL

DATE: 08/08/2022
PROJECT NO.: 2111

SHEET TITLE: ALTERNATE INTERIOR ELEVATIONS
SHEET NO.: A-742

8/8/2022 2:10:34 PM

NOTES:

- ALL MILLWORK TO BE MARINE GRADE PLYWOOD WITH AN OAK VENEER, UNO.

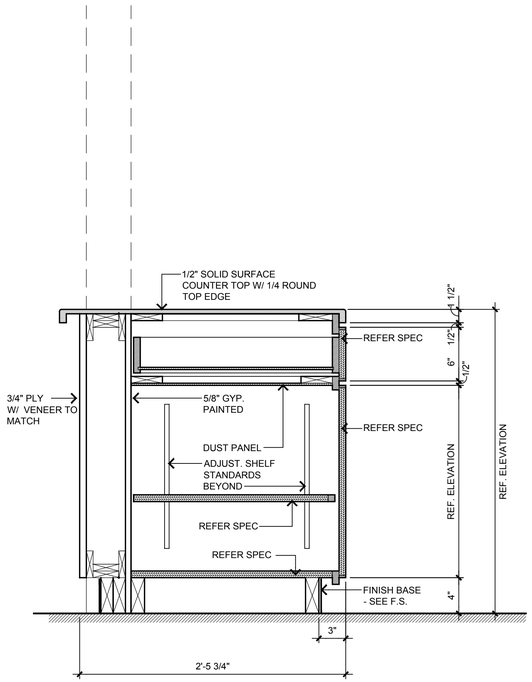

1 MILLWORK DETAIL

SCALE: 1 1/2""=1'-0"

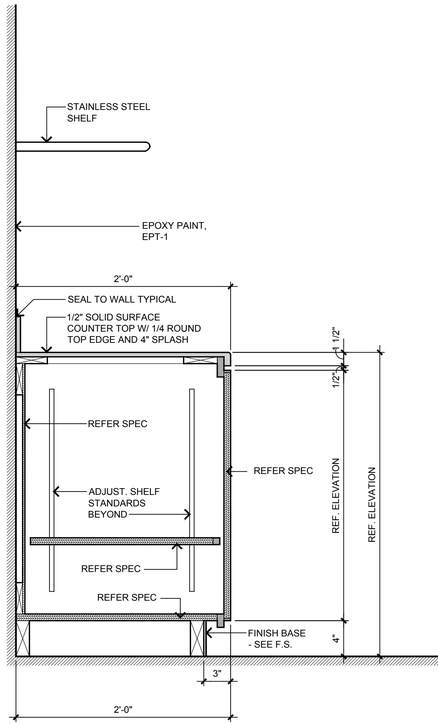

2 MILLWORK DETAIL

SCALE: 1 1/2""=1'-0"

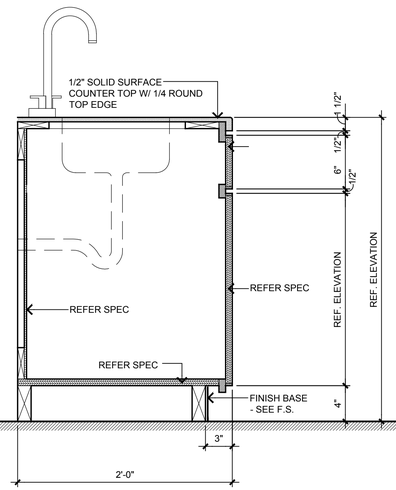

3 MILLWORK DETAIL

SCALE: 1 1/2""=1'-0"

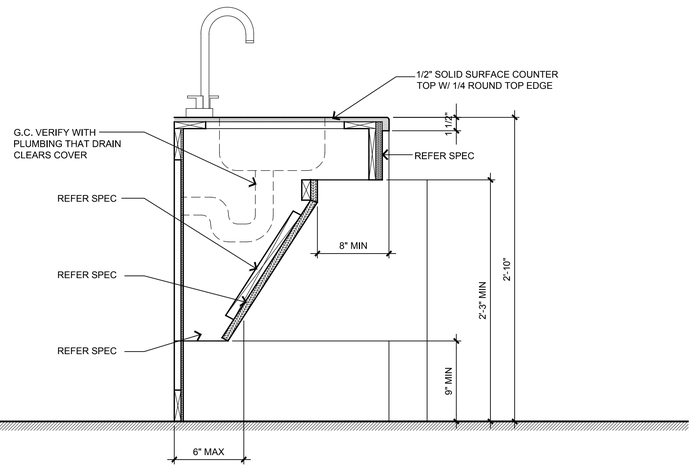

4 MILLWORK DETAIL

SCALE: 1 1/2""=1'-0"

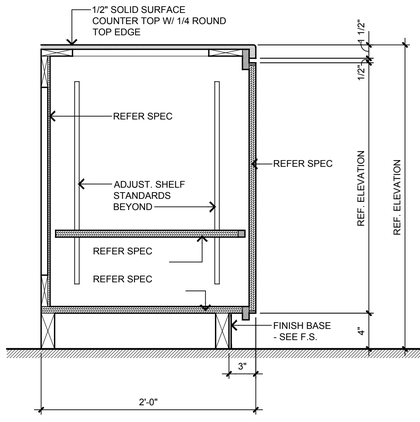

5 MILLWORK DETAIL

SCALE: 1 1/2""=1'-0"

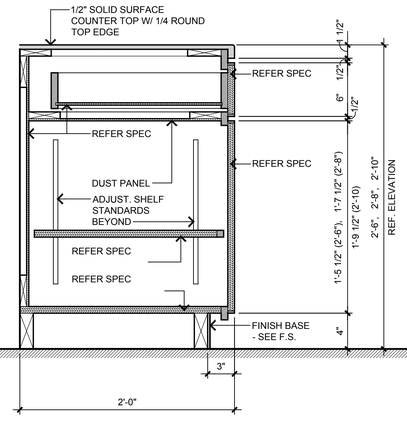

6 MILLWORK DETAIL

SCALE: 1 1/2""=1'-0"

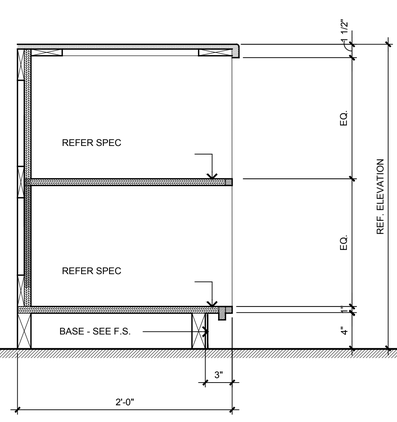

7 MILLWORK DETAIL

SCALE: 1 1/2""=1'-0"

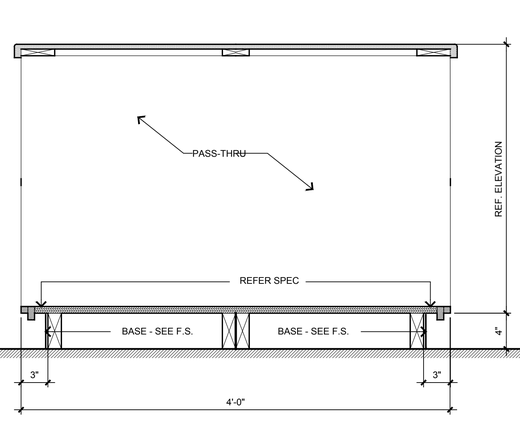

8 MILLWORK DETAIL

SCALE: 1 1/2""=1'-0"

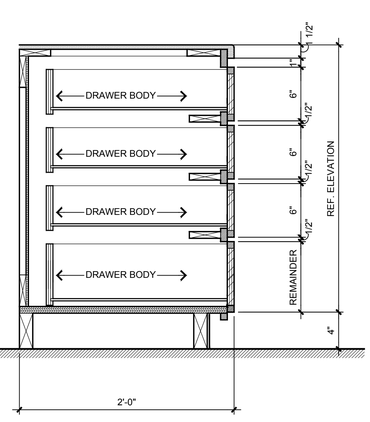

9 MILLWORK DETAIL

SCALE: 1 1/2""=1'-0"

ARCHITECTS IN PARTNERSHIP

ARCHITECTS
INTERIOR DESIGNERS
PLANNERS

3220 MARSHALL AVENUE
NORMAN, OK 73072
TEL: 405.360.1300
FAX: 405.360.1431

SEAL:



08/08/2022

HENNESSEY FIRE DEPARTMENT

REMODEL/ADDITION

HENNESSEY, OKLAHOMA

501 S. MAIN STREET

REVISIONS

REV.	DATE	DESCRIPTION

PROJ. MANAGER:	GL
DRAWN BY:	FR
CHECKED BY:	GL
DATE:	08/08/2022
PROJECT NO.:	2111
SHEET TITLE:	MILLWORK DETAILS
SHEET NO.:	A-750

ABBREVIATIONS

Ø	ROUND
ABV	ABOVE
AC	AIR CONDITIONING
ACCU	AIR-COOLED UNIT
AD	ACCESS DOOR, AREA DRAIN
ADD	ADDENDUM
ADJ	ADJUSTABLE, ADJACENT
AFCV	AIRFLOW CONTROL VALVE
AFF	ABOVE FINISHED FLOOR
AFG	ABOVE FINISHED GRADE
AFMS	AIRFLOW MEASURING STATION
AFUE	ANNUAL FUEL UTILIZATION EFFICIENCY
AGA	AMERICAN GAS ASSOCIATION
AHJ	AUTHORITY HAVING JURISDICTION
AHU	AIR HANDLING UNIT
AHRI	AIR-CONDITIONING, HEATING, AND CONTROL ASSOCIATION
ALT	ALTERNATE
AMCA	AIR MOVEMENT AND CONTROL ASSOCIATION
ANSI	AMERICAN NATIONAL STANDARDS INSTITUTE
AP	ACCESS PANEL
APD	AIR PRESSURE DROP
ARCH	ARCHITECT/ARCHITECTURAL
AS	AIR SEPARATOR
ASCE	AMERICAN SOCIETY OF CIVIL ENGINEERS
ASHRAE	AMERICAN SOCIETY OF HEATING, REFRIGERATION, AND AIR-CONDITIONING ENGINEERS
ASME	AMERICAN SOCIETY OF MECHANICAL ENGINEERS
ASPE	AMERICAN SOCIETY OF PLUMBING ENGINEERS
ASTM	AMERICAN SOCIETY FOR TESTING AND MATERIALS
AVG	AVERAGE
AWS	AMERICAN WELDING SOCIETY
BAS	BUILDING AUTOMATION SYSTEM
BDD	BACKDRAFT DAMPER
BFF	BELOW FINISHED FLOOR
BFP	BACKFLOW PREVENTER
BHP	BRAKE HORSE POWER
BLW	BELOW
BTU	BRITISH THERMAL UNITS
BTUH	BRITISH THERMAL UNITS PER HOUR
C	CELSIUS
CAP	CAPACITY
CB	CATCH BASIN
CC	COOLING COIL
CFM	CUBIC FEET PER MINUTE
CH	CHILLER
CLG	CEILING
CO	CLEAN OUT, CARBON MONOXIDE
CO2	CARBON DIOXIDE
COMM	COMMUNICATIONS
COP	COEFFICIENT OF PERFORMANCE
CP	CONDENSATE PUMP
CPVC	CHLORINATED POLYVINYL CHLORIDE
CR	CONDENSATE RETURN
CSR	CURRENT SENSING RELAY
CT	COOLING TOWER
CTI	COOLING TECHNOLOGY INSTITUTE
CU	CONDENSING UNIT
CV	CONSTANT VOLUME, CONTROL VALVE
CW	COLD WATER
CWP	CHILLED WATER PUMP
CWR	CHILLED WATER RETURN
CWS	CHILLED WATER SUPPLY
dB	DECIBEL
dBA	DECIBEL A-WEIGHTING
D	DEGREE
DB	DRY BULB
DCW	DOMESTIC COLD WATER
DDC	DIRECT DIGITAL CONTROL
DEG	DEGREE(S)
DHW	DOMESTIC HOT WATER
DHWR	DOMESTIC HOT WATER RETURN
DIA	DIAMETER
DN	DOWN
DW	DISTILLED WATER
DWH	DOMESTIC WATER HEATER
DWV	DRAIN, WASTE, VENT
DX	DIRECT EXPANSION
EA	EXHAUST AIR, EACH
EAT	ENTERING AIR TEMPERATURE
EC	ELECTRICAL CONTRACTOR
ECC	ENVIRONMENTAL CONTROL CONTRACTOR
ECG	EGGCRATE GRILLE
EER	ENERGY EFFICIENCY RATIO
EF	EXHAUST FAN
EG	EXHAUST GRILLE
ELEC	ELECTRICAL
EMG	EXTRUDED METAL GRILLE
EMS	ENERGY MANAGEMENT SYSTEM
EQUIP	EQUIPMENT
ESP	EXTERNAL STATIC PRESSURE
ET	EXPANSION TANK
ETC	ET CETERA
EWC	ELECTRIC WATER COOLER
EWT	ENTERING WATER TEMPERATURE
EXIST	EXISTING
EXT	EXTERIOR
F	DEGREES FAHRENHEIT
F/SD	FIRE/SMOKE DAMPER
FAC	FIRE ALARM CONTRACTOR
FAR	FIRE ALARM RELAY
FAS	FIRE ALARM SYSTEM
FCO	FLOOR CLEAN OUT
FCU	FAN COIL UNIT
FD	FIRE DAMPER, FLOOR DRAIN
FDV	FIRE DEPARTMENT VALVE
FEMA	FEDERAL EMERGENCY MANAGEMENT AGENCY
FEP	FIELD EQUIPMENT PANEL
FL. FLR	FLOOR
FM	FLW METER
FO	FUEL OIL
FOV	FUEL OIL VENT
FOR	FUEL OIL RETURN
FOS	FUEL OIL SUPPLY
FP	FREEZE PROTECTION
FPM	FEET PER MINUTE
FPRH	FREEZE PROOF ROOF HYDRANT
FS	FLOOR SINK
FT	FOOT/FEET
FTR	FIN TUBE RADIATOR
FURN	FURNACE UNIT
G	GAS
GA	GAGE, GUAGE
GAL	GALLON
GC	GENERAL CONTRACTOR
GCO	GRADE CLEAN OUT
GPM	GALLONS PER MINUTE
GW	GREASE WASTE
HB	HOSE BIB
HC	HEATING COIL
HEPA	HIGH EFFICIENCY PARTICULATE AIR
HP	HEAT PUMP, HORSE POWER
HSTAT	HUMIDISTAT
HTG	HEATING
HTR	HEATER
HVAC	HEATING, VENTILATION, AND AIR CONDITIONING
HW	HOT WATER
HWP	HEATING WATER PUMP
HWR	HEATING WATER RETURN
HWS	HEATING WATER SUPPLY
HX	HEAT EXCHANGER
HYD	HYDRANT
I/O	INPUT/OUTPUT
IBC	INTERNATIONAL BUILDING CODE
ID	INDIRECT, INNER DIAMETER
IFB	INTEGRAL FACE/BYPASS
IFGC	INTERNATIONAL FUEL GAS CODE
ILK	INTERLOCK
IMC	INTERNATIONAL MECHANICAL CODE
IN	INCH(ES)
INV	INVERT
IPC	INTERNATIONAL PLUMBING CODE
LA	LEAVING AIR
LAN	LOCAL AREA NETWORK
LAT	LEAVING AIR TEMPERATURE
LAV	LAVATORY
LB	POUND(S)
LB/HR	POUNDS PER HOUR
LAT	LEAVING AIR TEMPERATURE
LP	LOW PRESSURE
LPG	LIQUEFIED PETROLEUM GAS
LV	LOUVER
LWT	LEAVING WATER TEMPERATURE
MA	MIXED AIR, MEDICAL AIR
MAT	MIXED AIR TEMPERATURE
MAU	MAKEUP AIR UNIT
MAX	MAXIMUM
MBH	ONE THOUSAND BTU PER HOUR
MC	MECHANICAL CONTRACTOR
MCA	MINIMUM CIRCUIT AMPACITY
MCC	MOTOR CONTROL CENTER
MCF	ONE THOUSAND CUBIC FEET
MD	MOTORIZED DAMPER
MECH	MECHANICAL
MFR	MANUFACTURER
MG	MEDICAL GAS
MIN	MINIMUM
MISC	MISCELLANEOUS
MOCP	MAXIMUM OVERCURRRENT PROTECTION
MS	MOP SINK
MTR	MOTOR
MV	MEDICAL VACUUM
N2	NITROGEN
N2O	NITROUS OXIDE
NC	NOISE CRITERIA, NORMALLY CLOSED
NEC	NATIONAL ELECTRICAL CODE
NEMA	NATIONAL ELECTRICAL MANUFACTURER'S ASSOCIATION
NFC	NATIONAL FIRE CODE
NFPA	NATIONAL FIRE PROTECTION ASSOCIATION
NIC	NOT IN CONTRACT
NO	NORMALLY OPEN, NUMBER
NTS	NOT TO SCALE
O2	OXYGEN
OA	OUTDOOR AIR
OAT	OUTDOOR AIR TEMPERATURE
OC	ON CENTER
OCC	OCCUPANCY
OD	OUTSIDE DIAMETER
OFCI	OWNER FURNISHED, CONTRACTOR INSTALLED
ORD	OVERFLOW ROOF DRAIN
OSHA	OCCUPATIONAL SAFETY AND HEALTH ADMINISTRATION
PC	PLUMBING CONTRACTOR
PD	PRESSURE DROP
PH, Ø	PHASE
PHC	PREHEAT COIL
PIV	POST INDICATOR VALVE
PKG	PACKAGE
PLBG	PLUMBING
PM	PRESSURE MONITOR
PPM	PARTS PER MILLION
PRESS	PRESSURE
PRV	PRESSURE REDUCING VALVE
PS	PRESSURE SENSOR
PSI	POUNDS PER SQUARE INCH
PSIA	PSI ABSOLUTE
PSIG	POUNDS PER SQUARE INCH GAUGE
PTAC	PACKAGED TERMINAL AIR CONDITIONER
PVC	POLYVINYL CHLORIDE
PWR	POWER
R	DUCT RISER
RA	RETURN AIR
RAT	RETURN AIR TMPERATURE
RCP	RADIANT CEILING PANEL
RD	ROOF DRAIN, RETURN DIFFUSER
REC	RECESSED
RED	REDUCER
RF	RETURN FAN
RG	RETURN GRILLE
RH	RELATIVE HUMIDITY, ROOF HATCH
RHC	REHEAT COIL
RL/A	RELIEF AIR
RM	ROOM
RO	REVERSE OSMOSIS WATER
RPM	REVOLUTIONS PER MINUTE
RTU	ROOFTOP UNIT
RV	ROOF VENT
RW	RAIN WATER
S15	STEAM AT PRESSURE NOTED
SA	SUPPLY AIR
SAN	SANITARY
SAT	SUPPLY AIR TEMPERATURE
SD	SUPPLY DIFFUSER, SMOKE DAMPER, STORM DRAIN
SEER	SEASONAL ENERGY EFFICIENCY RATIO
SEI	STRUCTURAL ENGINEERING INSTITUTE
SF	SQUARE FOOT
SG	SUPPLY GRILLE
SM	SURFACE MOUNT
SMACNA	SHEET METAL AND AIR-CONDITIONING CONTRACTORS ASSOCIATION
SP	STANDPIPE, STATIC PRESSURE
SPEC	SPECIFICATION
SQ	SQUARE
SRV	SAFETY RELIEF VALVE
SS	SANITARY SEWER
STM	STEAM
T	THERMOSTAT, TON(S)
TAB	TESTING, ADJUSTING, AND BALANCING
TD	TEMPERATURE DROP
TDR	TRENCH DRAIN
TEMP	TEMPERATURE
TP	TOTAL PRESSURE
TSP	TOTAL STATIC PRESSURE
TSTAT	THERMOSTAT
TWP	TOWER WATER PUMP
TWR	TOWER WATER RETURN
TWS	TOWER WATER SUPPLY
TYP	TYPICAL
UG	UNDERGROUND
UH	UNIT HEATER
UL	UNDERWRITER'S LABORATORIES
UON	UNLESS OTHERWISE NOTED
UV	ULTRAVIOLET
V	VENT, VOLT
VAC	VACUUM
VAV	VARIABLE AIR VOLUME
VENT	VENTILATION
VFD	VARIABLE FREQUENCY DRIVE
VP	VELOCITY PRESSURE
VTR	VENT THROUGH ROOF
W	WASTE, WATT
W/	WITH
WO	WITHOUT
WAGD	WASTE ANESTHESIA GAS DISPOSAL
WB	WET BULB
WC	WATER CLOSET
WCO	WALL CLEAN OUT
WG	WATER GAGE
WH	WALL HYDRANT
WPD	WATER PRESSURE DROP
YCO	YARD CLEANOUT
YD	YARD DRAIN
(E)	EXISTING

EQUIPMENT ABBREVIATIONS

AC	AIR CONDITIONING UNIT
ACCU	AIR COOLING CONDENSING UNIT
AHU	AIR HANDLING UNIT
AS	AIR SEPARATOR
B	BOILER
CH	CHILLER
CT	COOLING TOWER
CUH	CABINET UNIT HEATER
CHWP	CHILLED WATER PUMP
DBP	DOMESTIC WATER BOOSTER PUMP
DC	DUCT MOUNTED COIL
DCP	DOMESTIC WATER CIRCULATING PUMP
EF	EXHAUST FAN
EDC	ELECTRIC DUCT COIL
ET	EXPANSION TANK
EWH	ELECTRIC WATER HEATER
FCU	FAN COIL UNIT
FP	FIRE PUMP
GI	GREASE INTERCEPTOR
GRV	GRAVITY ROOF VENTILATOR
HWP	HEATING WATER PUMP
HRU	HEAT RECOVERY UNIT
PRV	POWER ROOF VENTILATOR
RE	RETURN/EXHAUST FAN
RTU	ROOFTOP UNIT
SP	SUMP PUMP
UH	UNIT HEATER
WH	WATER HEATER

PLUMBING GENERAL NOTES

A. FIELD VERIFY ALL NEW WATER, WASTE, AND VENT PIPING CONNECTIONS AND PROVIDE NEW CONNECTIONS AS REQUIRED FOR PROPERLY OPERATING SYSTEMS.

B. PITCH UNDERFLOOR SANITARY WASTE PIPING AT 1/4" PER FOOT, UNLESS NOTED OTHERWISE.

C. PITCH UNDERFLOOR STORM PIPING 3" AND GREATER AT 1/8" PER FOOT, UNLESS NOTED OTHERWISE. PITCH ALL OTHER STORM PIPING AT 1/4" PER FOOT UNLESS OTHERWISE NOTED.

D. FIELD VERIFY LOCATION AND INVERTS OF SITE UTILITIES PRIOR TO INSTALLATION.

E. ROUTE DOMESTIC WATER, FIRE PROTECTION, SANITARY SEWER, AND STORM SEWER SERVICES TO SITE UTILITIES 5'-0" FROM BUILDING UNLESS NOTED OTHERWISE. REFER TO CIVIL PLANS.

F. WASTE AND VENT PIPING BELOW FLOOR AND THROUGH FLOOR SHALL BE 2" MINIMUM.

G. PROVIDE CLEANOUT IN ACCESSIBLE LOCATION AT THE BASE OF ALL PLUMBING RISERS.

H. CONTRACTOR SHALL VERIFY DEPTH, SIZE, AND LOCATION OF ALL EXISTING UTILITIES IN FIELD PRIOR TO STARTING WORK.

I. CONTRACTOR SHALL FURNISH AND INSTALL ALL BACKFLOW PROTECTION DEVICES REQUIRED BY LOCAL GOVERNING AUTHORITIES.

J. DO NOT RUN ANY PLUMBING PIPING OR ANY OTHER ITEMS ABOVE OPERATING ROOMS, PROCEDURE ROOMS. OR CATH LABS.

K. DO NOT BLOCK DUCTWORK ACCESS DOORS WITH PIPING.

L. ALL PLUMBING VENTS AND OTHER EXHAUSTS MUST BE 25'-0" FROM ANY OUTDOOR AIR INTAKE.

M. ALL EXPOSED LINES TO BE CHROME PLATED.

N. WHEN PIPING IS TO BE ROUTED ON AN EXTERIOR WALL, THE PIPING SHALL BE IN THE THERMAL SIDE OF THE WALL INSULATION.

O. EACH FIXTURE SHALL HAVE SHUTOFF VALVES ON BOTH HOT AND COLD WATER LINES.

P. LOCATION OF FLOOR DRAINS IN MECHANICAL ROOMS SHALL BE COORDINATED WITH THE HVAC CONTRACTOR.

PLUMBING AND PIPING SYMBOLS

REVISION NUMBER - SHOWN ON PLANS

POINT WHERE NEW CONNECTS TO EXISTING

NUMBER OF DETAIL ON SHEET

NUMBER OF SHEET WHERE DETAIL APPEARS

KEYNOTE

CONTINUATION SYMBOL

Room 4 — ROOM NAME AND NUMBER

ITEM TO BE DEMOLISHED

AREA NOT IN CONTRACT

2" — PIPE SIZE TAG (DIAMETER)

ABOVE GROUND PIPING

1/8" / 12" SLOPE — PIPE SLOPE TAG

BELOW GROUND PIPING

INVERT: -105' - 1" — PIPE INVERT ELEVATION TAG

(E) — EXISTING PIPE TAG

PIPING BEING DEMOLISHED

G — NATURAL GAS

PG — PROPANE GAS

CA — COMPRESSED AIR

CW — DOMESTIC COLD WATER

S-CW — SOFT COLD WATER

RO — REVERSE OSMOSIS WATER

HW — HOT WATER

HW 140° — HOT WATER 140°

HW-R — HOT WATER RECIRCULATION

HW-R 140°- — HOT WATER RECIRCULATION 140°

GV — GREASE VENT

GW — GREASE WASTE

IW — INDIRECT WASTE

OV — OIL VENT

OW — OIL WASTE

PD — PUMP DISCHARGE

V — SANITARY VENT

SS — SANITARY SEWER

SD — STORM DRAINAGE

OSD — OVERFLOW STORM DRAINAGE

CO2 — CARBON DIOXIDE

DA — DENTAL AIR

DV — DENTAL VACUUM

MA — MEDICAL AIR

MV — MEDICAL VACUUM

N2 — NITROGEN

N2O — NITROUS OXIDE

O2 — OXYGEN

WAGD — WASTE ANESTHESIA GAS DISPOSAL

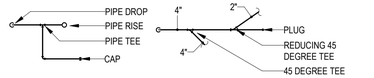

PIPE ACCESSORY LEGEND

- DOMESTIC WATER METER
- BALANCING VALVE
- 1/4 TURN BALL VALVE
- CHECK VALVE
- 3-WAY MIXING VALVE
- MOTORIZED CONTROL VALVE
- 3 WAY MOTORIZED CONTROL VALVE
- PRESSURE REDUCING VALVE
- REFRIGERANT SOLENOID VALVE
- BUTTERFLY VALVE

DRAIN TAGS

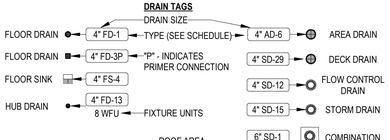

PLUMBING FIXTURE TAGS

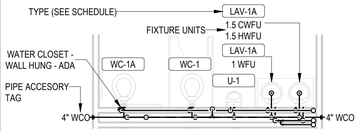

PROJECT GENERAL NOTES

A. ALL WORK AND MATERIAL SHALL COMPLY WITH ALL GOVERNING CODES, SAFETY ORDERS, AND REGULATIONS.

B. CONTRACTOR SHALL OBTAIN AND PAY ALL NECESSARY PERMITS, FEES, AND INSPECTIONS REQUIRED BY GOVERNING AUTHORITIES.

C. ANY EQUIPMENT OR DEVICE NOT LISTED AS REFERENCE PRODUCT ON THE SCHEDULE SHALL FIT IN THE SPACE PROVIDED WITH PROPER CLEARANCES INCLUDING ACCEPTABLE MANUFACTURERERS LISTED IN THE SPECIFICATIONS. CONTRACTOR SHALL SUBMIT A 1/4" SCALE DRAWING OF ALL EQUIPMENT DIFFERENT THAN THE REFERENCE PRODUCT FOR APPROVAL PRIOR TO INSTALLATION.

D. BY NECESSITY, THESE DRAWINGS REFLECT SYSTEMS DESIGNED AROUND SPECIFIC REFERENCE PRODUCTS THE SOLUTION OF WHICH HAS IMPACTED DESIGNS OF OTHER DISCIPLINES (ELECTRICAL, ARCHITECTURAL, STRUCTURAL, PLUMBING, ETC). IF ALTERNATE MANUFACTURERS, FUEL SOURCES, SIZES, AND/OR MODEL NUMBERS ARE SUBMITTED AND APPROVED, IT IS THE RESPONSIBILITY OF THE GENERAL CONTRACTOR AND ALL SUBCONTRACTORS TO COORDINATE ALL DIFFERENCES PRIOR TO BID. THE SUBSTITUTING CONTRACTORS SHALL BE RESPONSIBLE FOR CHANGES REQUIRED TO OTHER TRADES IF ALTERNATE EQUIPMENT IS BID OR INSTALLED AT THE CONTRACTOR'S OPTION.

E. ALL DRAWINGS ARE DIAGRAMMATIC IN NATURE. THE CONTRACTOR MAY AT THEIR OPTION MOIDFY PIPE ROUTING IN ORDER TO CREATE A SYSTEM THAT MEETS THE INTENT OF THIS SET OF CONSTRUCTION DOCUMENTS.

F. ALL CONTRACT DOCUMENTS (SPECIFICATIONS AND DRAWINGS) ARE COMPLIMENTARY AND MUST BE USED IN COMBINATION TO OBTAIN COMPLETE CONSTRUCTION INFORMATION. ALL CONFLICTS SHALL BE BROUGHT TO THE ARCHITECT'S OR ENGINEER'S ATTENTION IN ORDER TO ALLOW A CLARIFICATION TO BE ISSUED. ANY WORK COMPLETED WITHOUT THE CLARIFYING INFORMATION IS AT THE CONTRACTOR'S FINANCIAL RISK.

G. LOCATE ALL TERMINAL UNITS, DAMPERS, VALVES, AND OTHER EQUIPMENT REQUIRING ACCESS ABOVE LAY-IN CEILING. IF EQUIPMENT MUST BE LOCATED ABOVE GYPSUM CEILING OR ANOTHER TYPE OF INACCESSIBLE CEILING, INSTALL ACCESS PANELS AND COORDINATE THE LOCATION WITH GENERAL CONTRACTOR.

H. DO NOT RUN ANY HVAC/PLUMBING PIPING, DUCTWORK, OR ANY OTHER ITEMS ABOVE I.T., TELECOM, OR ELECTRICAL ROOMS UNLESS IT SERVES JUST THAT ROOM.

I. THE MECHANICAL CONTRACTOR SHALL BE RESPONSIBLE FOR FIELD VERIFYING, PRIOR TO FINAL BID, ALL EXISTING CONDITIONS FOR PLUMBING AND MECHANICAL SYSTEMS WITHIN TENANT SPACE AND WITHIN CLOSE PROXIMITY OF TENANT SPACE.

J. THE MECHANICAL CONTRACTOR SHALL REVIEW EXISTING EQUIPMENT TO BE REUTILIZED UNDER THIS PROJECT AND COMPILE A CONDITIONS REPORT FOR THE OWNER.

K. WHERE FLOOR DRAINS OCCUR WITHIN THE LIMITS OF CONSTRUCTION, PREVENT CONSTRUCTION DEBRIS FROM ENTERING DRAIN BODY BY SEALING DRAIN OPENING PRIOR TO START OF WORK. UNSEAL DRAINS AT COMPLETION OF CONSTRUCTION.

L. COORDINATE INSTALLATION OF PIPING, DUCTWORK, CONDUIT, LIGHTS, CABLE TRAY, STRUCTURE, AND EQUIPMENT TO PREVENT CONFLICTS.

M. THE CONTRACTOR SHALL BE FAMILIAR WITH ALL THE CONDITIONS BOTH EXISTING AND THOSE ILLUSTRATED BY THESE DOCUMENTS AS WELL AS THOSE WHICH CAN BE REASONABLY ANTICIPATED INCLUDING, BUT NOT LIMITED TO ARCHITECTURAL, ELECTRICAL, VENTILATION, PLUMBING, AND OTHER SYSTEMS INVOLVED ON THIS PROJECT.

N. REMOVE ALL UNUSED PIPING, DUCTWORK AND ACCESSORIES.

O. FINAL PRODUCT SHALL BE A COMPLETE AND FUNCTIONING SYSTEM, AND SHALL CONFORM TO ALL REQUIREMENTS OF APPLICABLE FEDERAL, STATE, AND LOCAL CODES, INCLUDING BUT NOT LIMITED TO THE INTERNATIONAL BUILDING CODE AND INTERNATIONAL MECHANICAL CODE.

P. LOCATE EQUIPMENT REQUIRING ACCESS 2'-0" MAXIMUM ABOVE CEILING.

Q. ALL ROOF MOUNTED EQUIPMENT SHALL BE A MINIMUM 10'-0" FROM EDGE OF ROOF.

R. LOCATE DUCTWORK, PIPING AND MECHANICAL EQUIPMENT AWAY FROM THE SPACE ABOVE ELECTRICAL PANELS. TRANSFORMERS AND OTHER ELECTRICAL EQUIPMENT.

S. FIRE SEAL AROUND DUCT AND PIPING PENETRATIONS OF FIRE RATED WALLS. REFER TO SPECIFICATION.

T. PROVIDE SLEEVES AND/OR OPENINGS TO RUN PIPES AND DUCTS THROUGH FOUNDATIONS, FLOORS, WALLS, AND ROOF.

U. ADJUST PIPING AND DUCTWORK SIZES TO PROPERLY CONNECT TO MECHANICAL EQUIPMENT.

V. REFER TO PLUMBING SERIES DRAWINGS FOR GAS PIPING.

W. PIPE SIZES SHOWN SHALL BE CONTINUED IN THE DIRECTION OF FLOW UNTIL ANOTHER SIZE IS SHOWN.

X. FOR DETAILS, EQUIPMENT CONNECTIONS, AND PIPE SIZES NOT SHOWN ON THE SEGMENTS, REFER TO DETAILS, SCHEDULES, AND SPECIFICATIONS.

Y. INSTALL ALL EQUIPMENT IN ACCORDANCE WITH THE RESPECTIVE MANUFACTURER'S WRITTEN INSTALLATION INSTRUCTIONS, AT A LEVEL OF QUALITY AND WORKMANSHIP CONSISTENT WITH THE SPECIFICATIONS.

Z. LOCATIONS OF PIPING, DUCTWORK AND EQUIPMENT AS INDICATED ON THE DRAWING, ARE APPROXIMATE AND SUBJECT TO ADJUSTMENTS IN THE FIELD. WORK SHALL BE COORDINATED WITH ALL OTHER TRADES TO AVOID INTERFERENCE IN THE FIELD.

ZZ. INSTALL EXPOSED PIPING AND DUCTWORK AS HIGH AS PRACTICAL IN ROOMS WITHOUT CEILINGS.

PLUMBING SHEET INDEX

P-001	PLUMBING GENERAL
P-111	FIRST FLOOR PLUMBING DEMOLITION PLAN
P-200	UNDERFLOOR PLUMBING PLAN
P-211	FIRST FLOOR PLUMBING PLAN
P-221	SECOND FLOOR PLUMBING PLAN
P-501	PLUMBING SCHEDULES
P-601	PLUMBING DETAILS
P-602	PLUMBING DETAILS
P-603	PLUMBING DETAILS
P-701	WASTE & VENT RISER DIAGRAMS
P-702	DOMESTIC RISER DIAGRAM

* NOTE *

ALL OF GENERAL NOTES ON THIS SHEET ARE TO BE APPLIED TO ALL OTHER DRAWINGS IN THIS SET.THE SYMBOLS AND ABBREVIATIONS SHOWN ON THIS SHEET MAY OR MAY NOT BE USED IN THIS SET OF DRAWINGS.

ARCHITECTS IN PARTNERSHIP

ARCHITECTS
INTERIOR DESIGNERS
PLANNERS

3220 MARSHALL AVENUE
NORMAN, OK 73072
TEL: 405.360.1300
FAX: 405.360.1431

SEAL:



HENNESSEY FIRE DEPARTMENT

REMODEL/ADDITION

HENNESSEY, OKLAHOMA

501 S. MAIN STREET

REVISIONS

REV.	DATE	DESCRIPTION

PROJ. MANAGER: SAT
DRAWN BY: BEA
CHECKED BY: SAT

DATE: 08/08/2022
PROJECT NO.: 2111

SHEET TITLE: PLUMBING GENERAL

SHEET NO.: P-001

MOXIFY
4334 NW EXPRESSWAY
SUITE 156
OKLAHOMA CITY, OK 73116
PHONE: (405) 254-5038
www.moxifyengineering.com
PROJECT: 501106
CA: 7612 EXP: 06/30/23

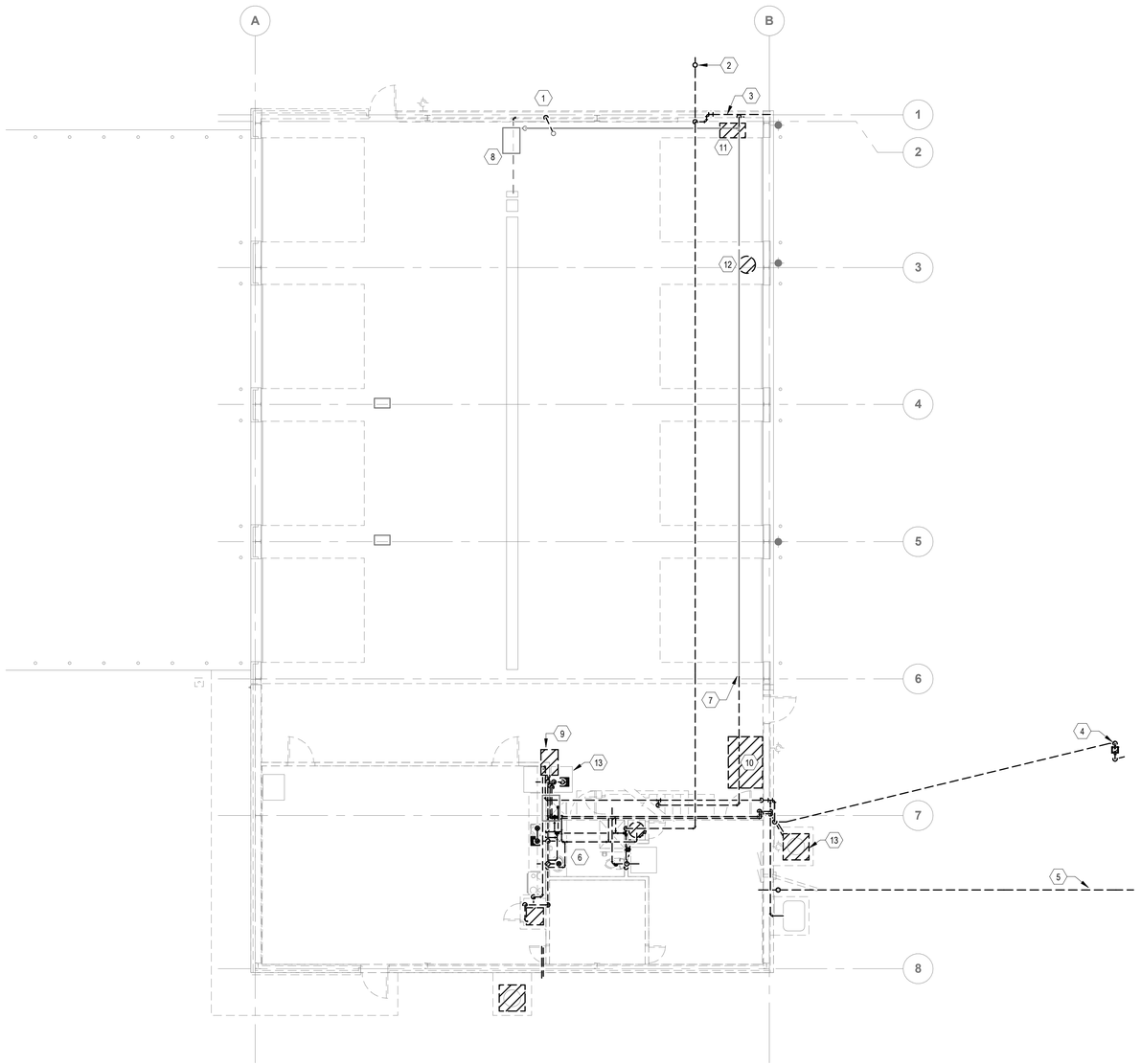

1 P-111 FIRST FLOOR PLUMBING DEMOLITION PLAN
1/8" = 1'-0"
0 4' 8' 16'

KEYNOTES

1. DEMOLISH VENT PIPING IN WALL, LEAVING PIPE BELOW TO EXTEND, AND PIPE THROUGH ROOF.
2. COORDINATE WITH UTILITY TO REPLACE/RELOCATE BUILDING SHUTOFF VALVE FOR INCOMING DOMESTIC WATER AS REQUIRED.
3. REMOVE EXISTING FIRE HOSE CONNECTION. COORDINATE WITH OWNER TO RETAIN HOSE CONNECTION FOR REUSE OR REPLACE WITH NEW.
4. COORDINATE WITH UTILITY TO REPLACE/RELOCATE GAS METER.
5. LOCATE AND REMOVE EXISTING SANITARY SERVICE. REFER TO CIVIL DRAWINGS.
6. DEMOLISH COMPLETE EXISTING FIXTURES AND DOMESTIC AND SANITARY SYSTEM.
7. DEMOLISH GAS PIPING TO POINT INDICATED.
8. GAS UNIT HEATER TO REMAIN.
9. REMOVE GAS UNIT HEATER TO BE REINSTALLED DURING CONSTRUCTION.
10. REMOVE COMPRESSOR SYSTEM TO BE RELOCATED. PROTECT PIPING SYSTEM TO RELOCATE CONNECTIONS IN DURING CONSTRUCTION.
11. REMOVE HOTSY WASH SYSTEM TO BE RELOCATED DURING CONSTRUCTION.
12. REMOVE PORTABLE AIR COMPRESSOR SYSTEM TO BE RELOCATED DURING CONSTRUCTION.
13. REMOVE ICEMAKER AND PAIRED CONDENSING UNIT FOR REUSE. PRESERVE WATER FILTRATION SYSTEM FOR INSTALLATION IN NEW CONSTRUCTION PHASE.

ARCHITECTS IN PARTNERSHIP

ARCHITECTS
INTERIOR DESIGNERS
PLANNERS

3220 MARSHALL AVENUE
NORMAN, OK 73072
TEL: 405.360.1300
FAX: 405.360.1431

SEAL:

LICENSED PROFESSIONAL ENGINEER
BRIAN E. ALLEN
33037
OKLAHOMA
08/08/22

HENNESSEY FIRE DEPARTMENT

REMODEL/ADDITION

HENNESSEY, OKLAHOMA

501 S. MAIN STREET

REVISIONS

REV.	DATE	DESCRIPTION

PROJ. MANAGER:	SAT
DRAWN BY:	BEA
CHECKED BY:	SAT

DATE: 08/08/2022

PROJECT NO.: 2111

SHEET TITLE: FIRST FLOOR PLUMBING DEMOLITION PLAN

SHEET NO.: P-111

MOXIFY

4334 NW EXPRESSWAY
SUITE 156
OKLAHOMA CITY, OK 73116
PHONE: (405) 254-5038
www.moxifyengineering.com
PROJECT: 501106
CA: 7612 EXP: 06/30/23

KEYNOTES

1. COORDINATE WITH UTILITY TO REPLACE/RELOCATE GAS METER.
2. ROUTE HW AND CW IN FLOOR TO SERVE ISLAND AND UP THROUGH WALL.
3. EXTEND EXISTING VENT FROM TRENCH DRAIN AND CONNECT TO EXISTING VENT TO ROOF.
4. ROUTE HW-R AND CW IN FLOOR TO SERVE ISLAND AND UP THROUGH WALL.
5. ROUTE 4" SS TO 4" FCO THAT CAN BE EXTENDED AS NEEDED FOR SECOND FLOOR BUILDOUT.

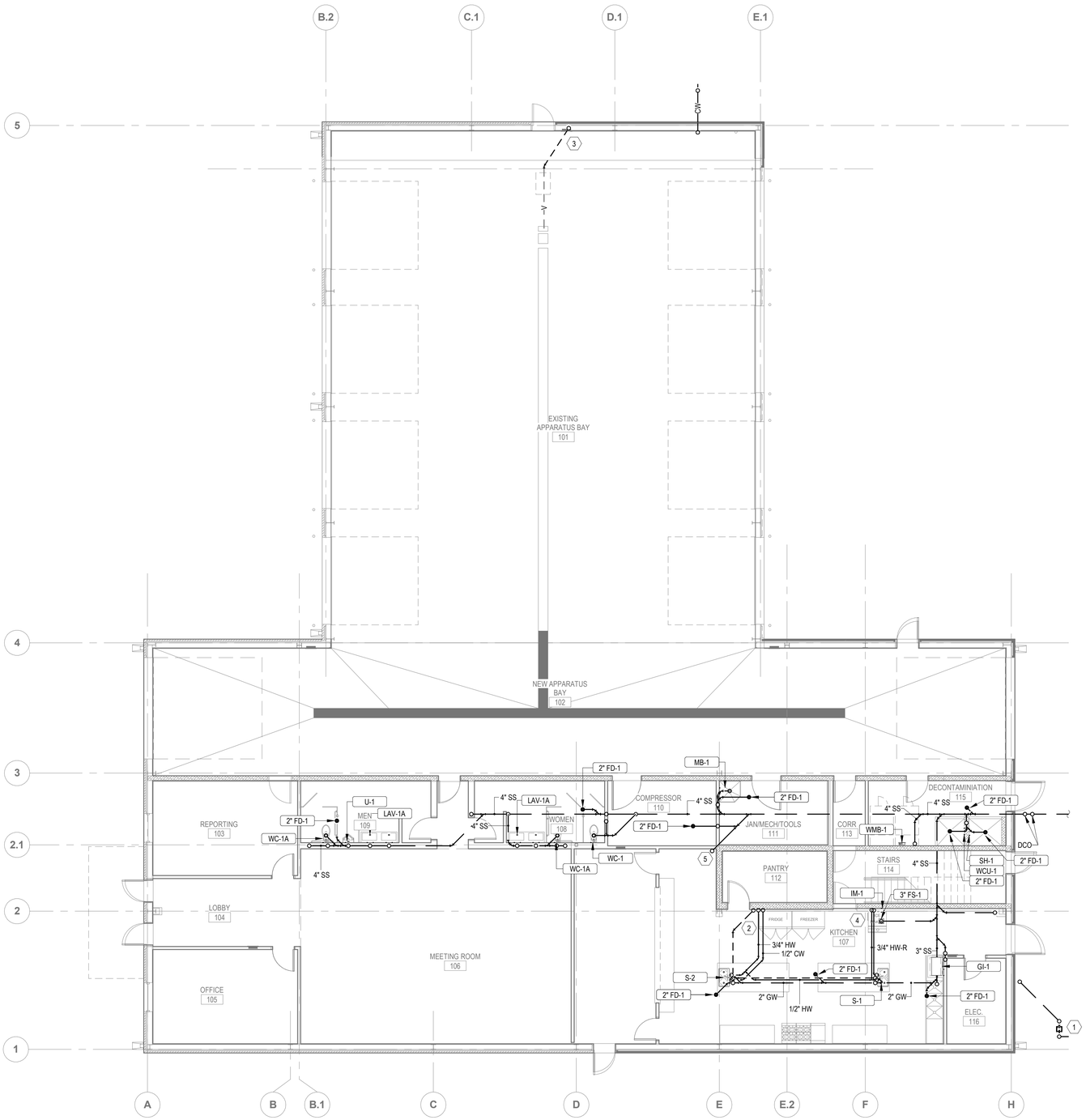

1 P-200 UNDERFLOOR PLUMBING PLAN
1/8" = 1'-0"
0 4' 8' 16'

ARCHITECTS IN PARTNERSHIP

ARCHITECTS
INTERIOR DESIGNERS
PLANNERS

3220 MARSHALL AVENUE
NORMAN, OK 73072
TEL: 405.360.1300
FAX: 405.360.1431

SEAL:

LICENSED PROFESSIONAL ENGINEER
BRIAN E. ALLEN
33037
OKLAHOMA
08/08/22

HENNESSEY FIRE DEPARTMENT

REMODEL/ADDITION

501 S. MAIN STREET

HENNESSEY, OKLAHOMA

REVISIONS

REV.	DATE	DESCRIPTION

PROJ. MANAGER:	SAT
DRAWN BY:	BEA
CHECKED BY:	SAT

DATE: 08/08/2022

PROJECT NO.: 2111

SHEET TITLE: UNDERFLOOR PLUMBING PLAN

SHEET NO.: P-200

MOXIFY

4334 NW EXPRESSWAY
SUITE 156
OKLAHOMA CITY, OK 73116
PHONE: (405) 254-5038
www.moxifyengineering.com
PROJECT: 501106
CA: 7612 EXP: 06/30/23

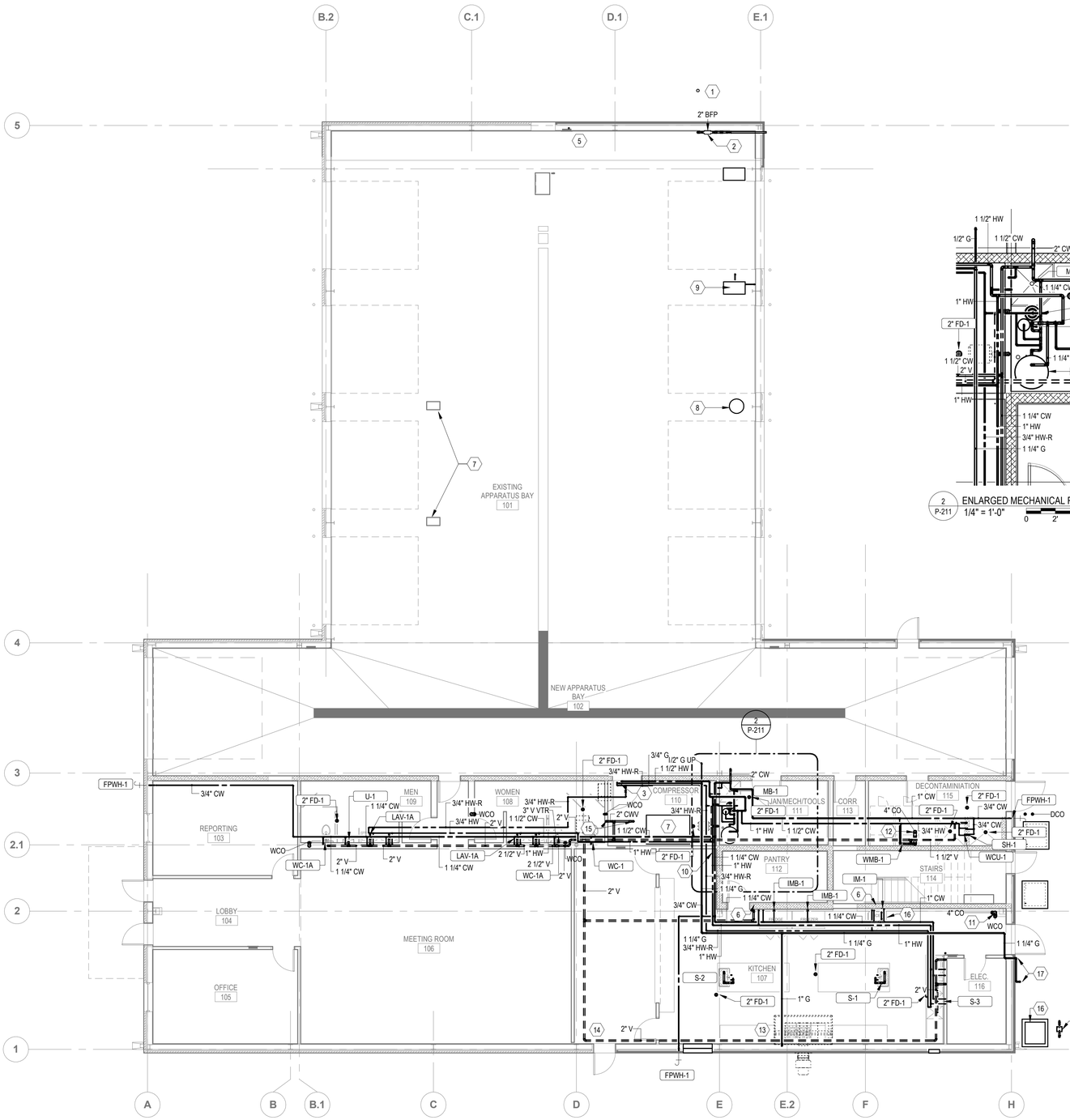

1 P-211 FIRST FLOOR PLUMBING PLAN
1/8" = 1'-0"
0 4' 8' 16'

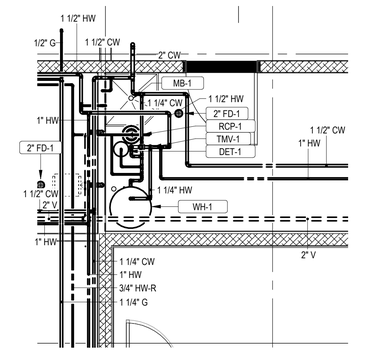

2 P-211 ENLARGED MECHANICAL ROOM ABOVE FLOOR PLUMBING PLAN
1/4" = 1'-0"
0 2' 4' 8'

KEYNOTES

1. COORDINATE WITH UTILITY TO REPLACE/RELOCATE BUILDING SHUTOFF VALVE FOR INCOMING DOMESTIC WATER AS REQUIRED.
2. INSTALL 2" BACKFLOW PREVENTION ON MAIN SERVICE THEN TAKEOFF FOR EXTERIOR HOSE CONNECTION WITH ISOLATION VALVE AT WALL. COORDINATE WITH OWNER TO REUSE OR REPLACE HOSE CONNECTION FROM DEMO PHASE.
3. ROUTE PIPING TO/FROM 2ND LEVEL MECHANICAL ROOM.
4. COORDINATE WITH UTILITY TO REPLACE/RELOCATE GAS METER. ENSURE PROPER AHJ CLEARANCES ARE MET. GAS LOAD IS ESTIMATED TO BE 1650 CFH AT 2.0 PSI.
5. EXTEND EXISTING VENT FROM TRENCH DRAIN AND CONNECT TO EXISTING VENT TO ROOF.
6. ROUTE HW AND CW DOWN THROUGH WALL AND IN/UNDER FLOOR TO SERVE ISLAND.
7. INSTALL EXISTING AIR COMPRESSOR AT NEW LOCATION WITH WITH PIPING TO EXISTING FLOATING HOSE REELS.
8. LOCATION OF RELOCATED STAND ALONE AIR COMPRESSOR. COORDINATE LOCATION WITH OWNER.
9. LOCATION OF RELOCATED HOTSY WASH EQUIPMENT. COORDINATE LOCATION WITH OWNER AND ROUTE WATER AND GAS SERVICES DOWN FROM ABOVE.
10. 4" FCO THAT CAN BE EXTENDED AS NEEDED FOR SECOND FLOOR BUILDOUT.
11. COORDINATE WITH GC, EXTEND 4" SS ABOVE CEILING AND TERMINATE WITH CLEANOUT THAT CAN BE EXTENDED AS NEEDED FOR SECOND FLOOR BUILDOUT. CONCEAL PIPE AND PROVIDE WCO AT 2' AFF.
12. EXTEND 4" SS ABOVE CEILING, AVOIDING VENT PIPE AND TERMINATING WITH CLEANOUT THAT CAN BE USED TO SERVE SECOND FLOOR BUILDOUT.
13. COORDINATE WITH GC, EXTEND 4" SS ABOVE CEILING AND TERMINATE WITH CLEANOUT. CONCEAL PIPE AND PROVIDE WCO AT 2' AFF.
14. VENT PIPING LAYOUT AS SHOWN IS TO ALLOW SPACE FOR FUTURE SECOND FLOOR DRAIN PIPING.
15. COORDINATE COMBINATION WASTE/VENT LOCATION ABOVE CEILING TO AVOID DUCTWORK FROM MECHANICAL ROOM ABOVE. ROUTE SS DRAIN UP TO FLOOR DRAIN SERVING SECOND FLOOR MECHANICAL ROOM.
16. COORDINATE WITH OTHER TRADES AND INSTALL ICEMAKER WITH WATER FILTRATION SYSTEM AND PAIRED CONDENSING UNIT PREVIOUSLY REMOVED AND PRESERVED DURING DEMOLITION. FOLLOW MANUFACTURER'S WRITTEN INSTALLATION INSTRUCTIONS.
17. COORDINATE GAS ENTRY WITH GC AND ELECTRICAL CONTRACTOR.

ARCHITECTS IN PARTNERSHIP

ARCHITECTS
INTERIOR DESIGNERS
PLANNERS

3220 MARSHALL AVENUE
NORMAN, OK 73072
TEL: 405.360.1300
FAX: 405.360.1431

SEAL:

LICENSED PROFESSIONAL ENGINEER
BRIAN E. ALLEN
33037
OKLAHOMA
08/08/22

HENNESSEY FIRE DEPARTMENT
REMODEL/ADDITION
501 S. MAIN STREET
HENNESSEY, OKLAHOMA

REVISIONS

REV.	DATE	DESCRIPTION

PROJ. MANAGER:	SAT
DRAWN BY:	BEA
CHECKED BY:	SAT
DATE:	08/08/2022
PROJECT NO.:	2111
SHEET TITLE:	FIRST FLOOR PLUMBING PLAN
SHEET NO.:	P-211

MOXIFY
4334 NW EXPRESSWAY
SUITE 156
OKLAHOMA CITY, OK 73116
PHONE: (405) 254-5038
www.moxifyengineering.com
PROJECT: 501106
CA: 7612 EXP: 06/30/23

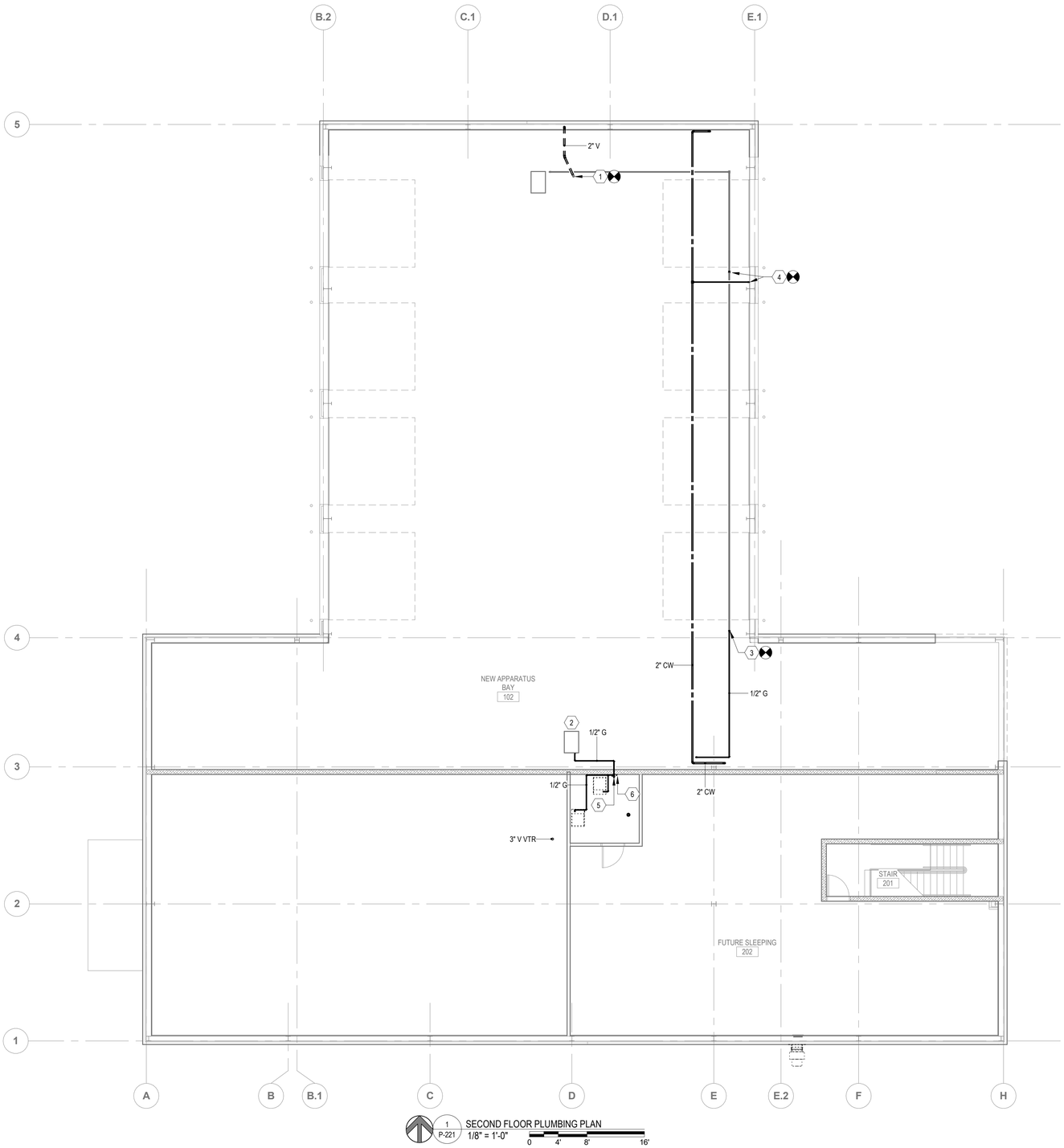

1 P-221 SECOND FLOOR PLUMBING PLAN
1/8" = 1'-0"
0 4' 8' 16'

KEYNOTES

1. EXTEND EXISTING VENT FROM TRENCH DRAIN AND CONNECT 2" VENT TO EXISTING.
2. INSTALL EXISTING GAS UNIT HEATER IN NEW LOCATION AS INDICATED WITH ESTIMATED MINIMUM 135" INSTALL HEIGHT TO NOT OBSTRUCT VEHICLE PATH.
3. CONNECT NEW 1/2" GAS PIPING TO EXISTING PIPING.
4. COORDINATE LOCATION WITH OWNER OF HOTSY WASH EQUIPMENT AND ROUTE WATER AND GAS SERVICES DOWN.
5. ROUTE 3/4" GAS PIPE THRU FLOOR WITH PROPER FIRE STOP PROTECTION TO MAINTAIN FIRE RATING THRU FLOOR.
6. ROUTE CW, HW, HW-R THROUGH FLOOR TO CEILING LEVEL AND STUB BRANCH WITH SHUT-OFF VALVES AND PIPE LENGTH WITH CAP FOR FUTURE BUILD-OUT. PROVIDE PROPER FIRE STOP PROTECTION TO MAINTAIN FIRE RATING THRU FLOOR.

ARCHITECTS IN PARTNERSHIP

ARCHITECTS
INTERIOR DESIGNERS
PLANNERS

3220 MARSHALL AVENUE
NORMAN, OK 73072
TEL: 405.360.1300
FAX: 405.360.1431

SEAL:

LICENSED PROFESSIONAL ENGINEER
BRIAN E. ALLEN
33037
OKLAHOMA
08/08/22

HENNESSEY FIRE DEPARTMENT

REMODEL/ADDITION

501 S. MAIN STREET

HENNESSEY, OKLAHOMA

REVISIONS

REV.	DATE	DESCRIPTION

PROJ. MANAGER:	SAT
DRAWN BY:	BEA
CHECKED BY:	SAT
DATE:	08/08/2022
PROJECT NO.:	2111
SHEET TITLE:	SECOND FLOOR PLUMBING PLAN
SHEET NO.:	P-221

MOXIFY

4334 NW EXPRESSWAY
SUITE 156
OKLAHOMA CITY, OK 73116
PHONE: (405) 254-5038
www.moxifyengineering.com
PROJECT: 501106
CA: 7612 EXP: 06/30/23

BACK FLOW PREVENTER SCHEDULE

ID	REFERENCE PRODUCT	MODEL NO.	LINE SIZE	TYPE	REMARKS
BFP-1	ZURN	975XL	2"	REDUCING PRESSURE	

THERMOSTATIC MIXING VALVE SCHEDULE

ID	MANUFACTURER	MODEL	QTY	MATERIAL	FINISH	FLUID PROPERTIES							VALVE PROPERTIES		REMARKS
						TYPE	LWT SETPOINT	EWT HOT	EWT COLD	FLOW	MIN FLOW	MAX PD	INLET SIZE	OUTLET SIZE	
TMV-1	LAWLER MFG	LAWLER 803 -73004	1	LEAD FREE BRASS	ROUGH BRONZE	DOM. WATER	110 °F	140 °F	40 °F	18.0 GPM	0.5 GPM	5.0 psi	1 1/4"	1 1/2"	ASSE 1017 COMPLIANT

Grand total: 1

GAS-FIRED WATER HEATER SCHEDULE

ID	REFERENCE PRODUCT	MODEL NO.	TYPE	GAS-FIRED HEAT EXCHANGER							THERMAL EFF	UNIT WEIGHT	VOLT	PH	REMARKS
				INPUT	CAP	EFF	GAS BURNER FUEL TYPE	GAS BURNER FUEL PRESS AVAIL	WATERSIDE FLOW DESIGN	WATERSIDE MAX TEMP RISE					
WH-1	AO SMITH	BTH-150	CONDENSING	150000 Btu/h	147000 Btu/h	98.0%	NG	2.0 psi	18.0 GPM	90 °F	98%	1388 lb	120 V	1	PROVIDE OPTIONAL CONCENTRIC VENT KIT, CONDENSATE NEUTRALIZATION KIT, AND LEAK DETECTION KIT.

DOMESTIC EXPANSION TANK SCHEDULE

ID	REFERENCE PRODUCT	MODEL NO.	MATERIAL	FINISH	SYSTEM	TYPE	ARRANGEMENT	VOL	MAX ACCEPTANCE FACTOR	ACCEPTANCE VOL	PRESS RELIEF	PRECHARGE PRESS	UNIT DIMENSIONS		UNIT WEIGHT	REMARKS
													DIAMETER	HEIGHT		
DET-1	WATTS	DETA-5	STEEL - POLYPROPYLENE LINING	RED OXIDE PRIMER	DOM. WATER	FIXED BUTYL BLADDER	INLINE	3.5 gal	0.65	2.3 gal	100 psi	40 psi	10"	14"	22 lb	

DOMESTIC CIRCULATING PUMP SCHEDULE

ID	REFERENCE PRODUCT	MODEL NO.	PUMP DESIGN FLOW	PUMP HEAD	VOLT	PH	REMARKS
RCP-1	ARMSTRONG	COMPASS H	0.5 GPM	5.3 FT	120 V	1	

FLOOR DRAIN SCHEDULE

ID	DESCRIPTION	REFERENCE PRODUCT	MODEL	QTY	MATERIAL DESCRIPTION		PRIMER CONNECTION	WASTE PIPE SIZE	VENT PIPE SIZE	PRIMER PIPE SIZE	SPECIFICATION	REMARKS
					DRAIN BODY	STRAINER						
FD-1	FLOOR DRAIN	WATTS	FD-100-A	11	EPOXY COATED CAST IRON	NICKEL BRONZE	No	2"	2"		EPOXY COATED CAST IRON FLOOR DRAIN WITH ANCHOR FLANGE, REVERSIBLE CLAMPING COLLAR WITH PRIMARY & SECONDARY WEEPHOLES, ADJUSTABLE ROUND HEEL PROOF NICKEL BRONZE STRAINER, AND NO HUB OUTLET.	
FS-1	FLOOR SINK	ZURN	Z1910	1	EPOXY COATED CAST IRON	ALUMINUM		3"	2"	---	8" SQUARE X 6" DEEP SANITARY FLOOR SINK WITH WHITE ACID RESISTANT PORCELAIN ENAMEL COATED INTERIOR, LOOSE SET PORCELAIN ENAMEL COATED CAST IRON GRATE, ALUMINUM DOME BOTTOM STRAINER, AND NO HUB OUTLET.	

Grand total: 12

GREASE INTERCEPTOR SCHEDULE

ID	REFERENCE PRODUCT	MODEL	QTY	TYPE	MATERIAL DESCRIPTION	COVER DESCRIPTION	DESIGN FLOW	CAPACITY GREASE	INSTALLATION BOTTOM OF EQUIPMENT ELEV	INSTALLATION ESTIMATED RISER HEIGHT	PIPE CONNECTIONS INLET INVERT	PIPE CONNECTIONS INLET DIA	PIPE CONNECTIONS OUTLET INVERT	PIPE CONNECTIONS OUTLET DIA	DIMENSIONS LENGTH	DIMENSIONS WIDTH	DIMENSIONS HEIGHT	REMARKS
GI-1	WATTS	WD-35	1	RECESSED	EPOXY COATED STEEL	SKID-PROOF	35.0 GPM	70.00 lbm	2' - 1"	0' - 6"	0' - 9"	3"	0' - 9"	3"	2' - 6"	1' - 6"	1' - 7"	

Grand total: 1

PLUMBING FIXTURE SCHEDULE

ID	DESCRIPTION	REFERENCE PRODUCT	MODEL	QTY	MATERIAL DESCRIPTION	FINISH	TRIM			FLOW FIXTURE WATER FLOW	FLUSH FIXTURE VOL. PER FLUSH	WASTE PIPE SIZE	INDIRECT WASTE PIPE SIZE	VENT PIPE SIZE	COLD WATER PIPE SIZE	HOT WATER PIPE SIZE	REMARKS
							REFERENCE PRODUCT	MODEL	TYPE								
FPWH-1	EXTERIOR WALL HYDRANT	WOODFORD	B65	3					MANUAL	2.5 GPM					3/4"		
IM-1	ICE MAKER	BY OTHERS	BY OTHERS	1	STAINLESS STEEL	STAINLESS STEEL			MANUAL	2.5 GPM			3/4"		1/2"		
IMB-1	ICE MAKER OUTLET BOX	SIOUX CHIEF	696-RG1010MF	2	ABS PLASTIC	WHITE				0.5 GPM					1/2"		
LAV-1A	LAVATORY - COUNTER - ADA	SLOAN	DSG-82.000	4	-	REFER TO ARCHITECT	SLOAN	ESD-420-SF, ETF-420-PLG-TEE-SF-0.5GPM-MLM-IR-FCT, ESD-324	WIRED	0.5 GPM		2"		2"	1/2"	1/2"	
MB-1	MOP BASIN	FIAT	MSB-2424	1	MOLDED STONE	WHITE	FIAT	830-AA	MANUAL	2.5 GPM		3"		2"	3/4"	3/4"	INCLUDE STAINLESS STEEL WALL GUARDS MSG2424, AND MOP HANGARS 889-CC
S-1	SINK	CORIAN	881P	1	CORIAN	BISQUE	AMERICAN STANDARD	COLONY PRO 7074.551	MANUAL	1.0 GPM		2"		2"	1/2"	1/2"	
S-2	SINK	CORIAN	5610	1	CORIAN	BISQUE	AMERICAN STANDARD	COLONY PRO 7074.551	MANUAL	1.0 GPM		2"		2"	1/2"	1/2"	
S-3	3-COMPARTMENT SINK	REGENCY TABLES AND SINKS	600S324242X	1	STAINLESS STEEL	STAINLESS STEEL	AERO SINK ACCESSORIES & OPTIONS	S-16 (2), S-20 (3), S-22 (1)	MANUAL	2.5 GPM			2"		1/2"	1/2"	
SH-1	DECONTAMINATION SHOWER STALL	BY OTHERS	BY OTHERS	1	3" CONCRETE CURB WITH FD-1	REFER TO ARCHITECT	BRADLEY	S19-12FMBF	MANUAL	22.0 GPM					1/2"	1/2"	INCLUDE BRADLEY TMV MODEL EFX20 AND INSTALL PER MANUFACTURER'S WRITTEN INSTRUCTIONS.
U-1	URINAL	AMERICAN STANDARD	WASHBROOK	1	WHITE VITREOUS CHINA	WHITE	AMERICAN STANDARD	SELECTRONIC 6063.013.002	WIRED		0.125 gal	2"		1-1/2"	3/4"		
WC-1	WATER CLOSET - FLOOR MOUNT - FLUSH VALVE	AMERICAN STANDARD	MADERA	1	WHITE VITREOUS CHINA	WHITE	AMERICAN STANDARD	SELECTRONIC	WIRED		1.28 gal	4"		2"	1"		
WC-1A	WATER CLOSET - FLOOR MOUNT - FLUSH VALVE - ADA	AMERICAN STANDARD	MADERA	2	WHITE VITREOUS CHINA	WHITE	AMERICAN STANDARD	SELECTRONIC	WIRED		1.28 gal	4"		2"	1"		
WCU-1	WATER CONTROL UNIT - EQUIPMENT RINSE STALL	BY OTHERS	BY OTHERS	1	3" CONCRETE CURB WITH FD-1	REFER TO ARCHITECT	T&S BRASS AND BRONZE WORKS	B-2339-LR	MANUAL	12.9 GPM					1/2"	1/2"	OFCI SPRAYER TO BE CONNECTED TO WCU-1
WCU-2	WATER CONTROL UNIT - HOSE REEL	BY OTHERS	BY OTHERS	1	OFCI HOSE REEL LOCATION	REFER TO ARCHITECT	T&S BRASS AND BRONZE WORKS	B-2339-LR	MANUAL	12.9 GPM					1/2"	1/2"	OFCI HOSE REEL WITH SPRAYER TO BE CONNECTED TO WCU-2
WMB-1	WASHING MACHINE OUTLET BOX	SIOUX CHIEF	696-R2313MF	1	ABS PLASTIC	WHITE				0.5 GPM		2"		2"	1/2"	1/2"	

Grand total: 22

MOXIFY
4334 NW EXPRESSWAY
SUITE 156
OKLAHOMA CITY, OK 73116
PHONE: (405) 254-5038
www.moxifyengineering.com
PROJECT: 501106
CA: 7612 EXP: 06/30/23

ARCHITECTS IN PARTNERSHIP

ARCHITECTS
INTERIOR DESIGNERS
PLANNERS

3220 MARSHALL AVENUE
NORMAN, OK 73072
TEL: 405.360.1300
FAX: 405.360.1431

SEAL:

LICENSED PROFESSIONAL ENGINEER
BRIAN E. ALLEN
33037
OKLAHOMA
08/08/22

HENNESSEY FIRE DEPARTMENT

REMODEL/ADDITION

HENNESSEY, OKLAHOMA

501 S. MAIN STREET

REVISIONS

REV.	DATE	DESCRIPTION

PROJ. MANAGER: SAT
DRAWN BY: BEA
CHECKED BY: SAT

DATE: 08/08/2022
PROJECT NO.: 2111

SHEET TITLE: PLUMBING SCHEDULES

SHEET NO.: P-501

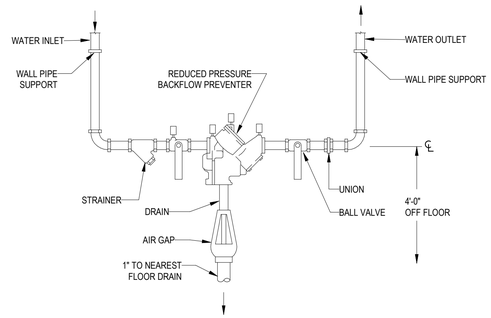

1 P-601 BACKFLOW PREVENTER DETAIL
NOT TO SCALE

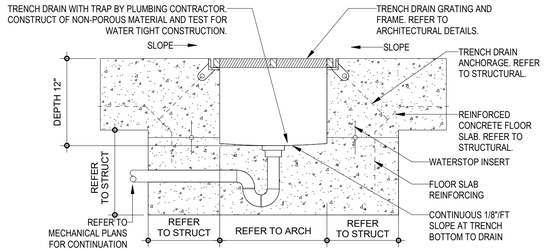

2 P-601 TRENCH DRAIN DETAIL WITH TRAP
NOT TO SCALE

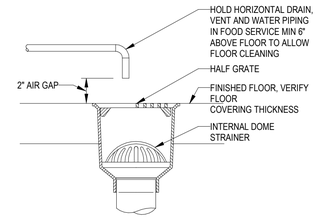

3 P-601 FLOOR SINK
NOT TO SCALE

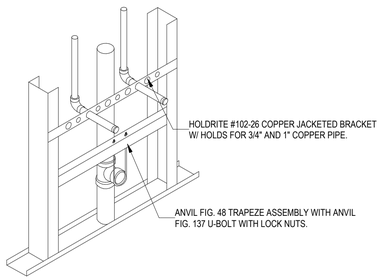

4 P-601 LAVATORY PIPING SUPPORT DETAIL
NOT TO SCALE

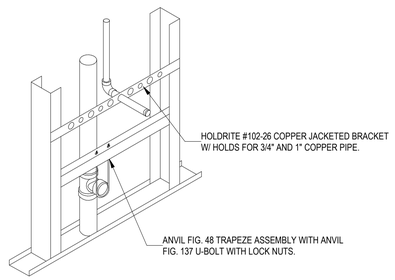

5 P-601 URINAL PIPING SUPPORT DETAIL
NOT TO SCALE

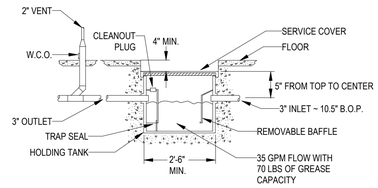

6 P-601 RECESSED IN-FLOOR GREASE INTERCEPTOR DETAIL
NOT TO SCALE

MOXIFY
4334 NW EXPRESSWAY
SUITE 156
OKLAHOMA CITY, OK 73116
PHONE: (405) 254-5038
www.moxifyengineering.com
PROJECT: 501106
CA: 7612 EXP: 06/30/23

ARCHITECTS IN PARTNERSHIP

ARCHITECTS
INTERIOR DESIGNERS
PLANNERS

3220 MARSHALL AVENUE
NORMAN, OK 73072
TEL: 405.360.1300
FAX: 405.360.1431

SEAL:

LICENSED PROFESSIONAL ENGINEER
BRIAN E. ALLEN
33037
OKLAHOMA
08/08/22

HENNESSEY FIRE DEPARTMENT
REMODEL/ADDITION
501 S. MAIN STREET
HENNESSEY, OKLAHOMA

REVISIONS

REV.	DATE	DESCRIPTION

PROJ. MANAGER: SAT
DRAWN BY: BEA
CHECKED BY: SAT

DATE: 08/08/2022
PROJECT NO.: 2111

SHEET TITLE: PLUMBING DETAILS
SHEET NO.: P-601

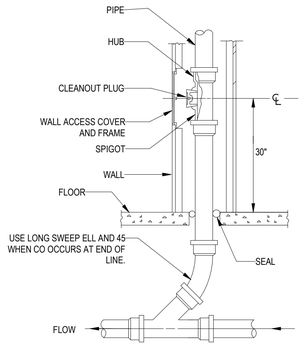

1 P-602 WALL CLEAN OUT DETAIL
NOT TO SCALE

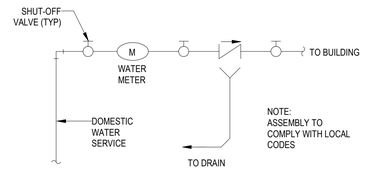

2 P-602 WATER SERVICE PIPING DETAIL
NOT TO SCALE

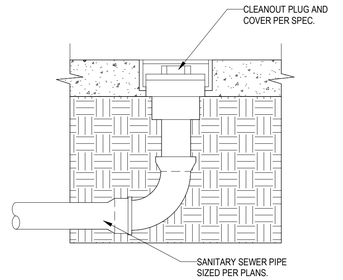

3 P-602 CLEANOUT DETAIL
NOT TO SCALE

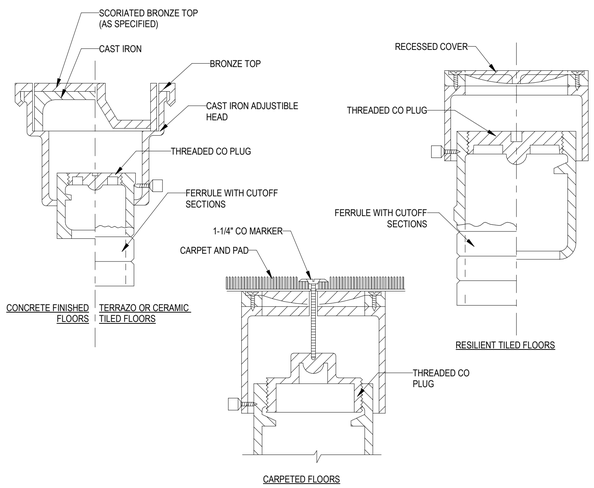

4 P-602 CLEANOUT DETAILS
NOT TO SCALE

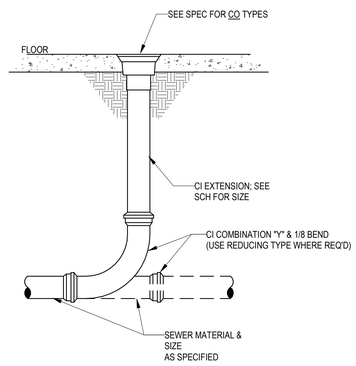

CLEANOUT SIZES

PIPE SIZE	CLEANOUT SIZE
2"	2"
3"	3"
4" & LARGER	4"

5 P-602 FLOOR CLEANOUT DETAIL
NOT TO SCALE

CLEANOUT SIZES

PIPE SIZE	CLEANOUT SIZE
4"	4"
6"	4"

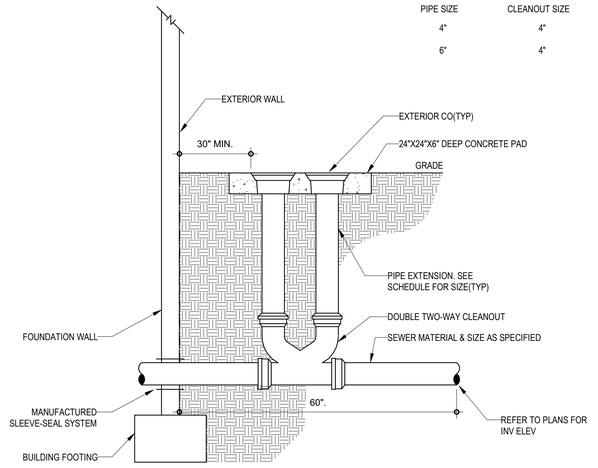

6 P-602 EXTERIOR TWO-WAY SANITARY CLEANOUT DETAIL
NOT TO SCALE

ARCHITECTS IN PARTNERSHIP

ARCHITECTS
INTERIOR DESIGNERS
PLANNERS

3220 MARSHALL AVENUE
NORMAN, OK 73072
TEL: 405.360.1300
FAX: 405.360.1431

SEAL:



HENNESSEY FIRE DEPARTMENT
REMODEL/ADDITION

HENNESSEY, OKLAHOMA

501 S. MAIN STREET

REVISIONS

REV.	DATE	DESCRIPTION

PROJ. MANAGER: SAT
DRAWN BY: BEA
CHECKED BY: SAT

DATE: 08/08/2022
PROJECT NO.: 2111

SHEET TITLE: PLUMBING DETAILS

SHEET NO.: P-602

MOXIFY

4334 NW EXPRESSWAY
SUITE 156
OKLAHOMA CITY, OK 73116
PHONE: (405) 254-5038
www.moxifyengineering.com
PROJECT: 501106
CA: 7612 EXP: 06/30/23

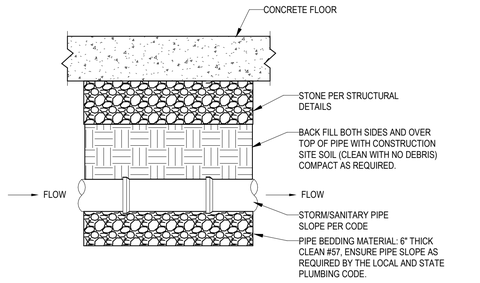

1 P-603 SANITARY WASTE/STORM PIPE BEDDING DETAIL
NOT TO SCALE

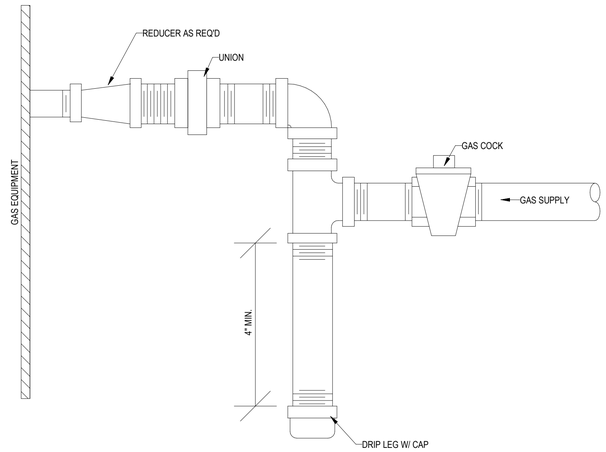

2 P-603 GAS CONNECTION DETAIL
NOT TO SCALE

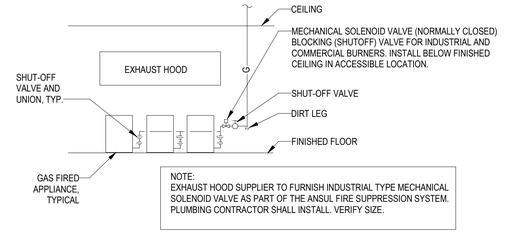

3 P-603 SOLENOID VALVE
NOT TO SCALE

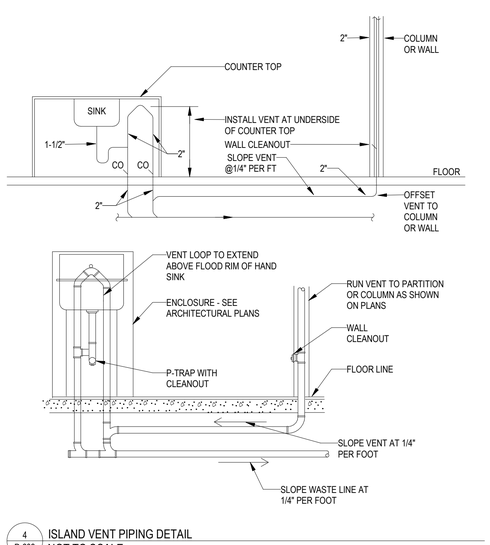

4 P-603 ISLAND VENT PIPING DETAIL
NOT TO SCALE

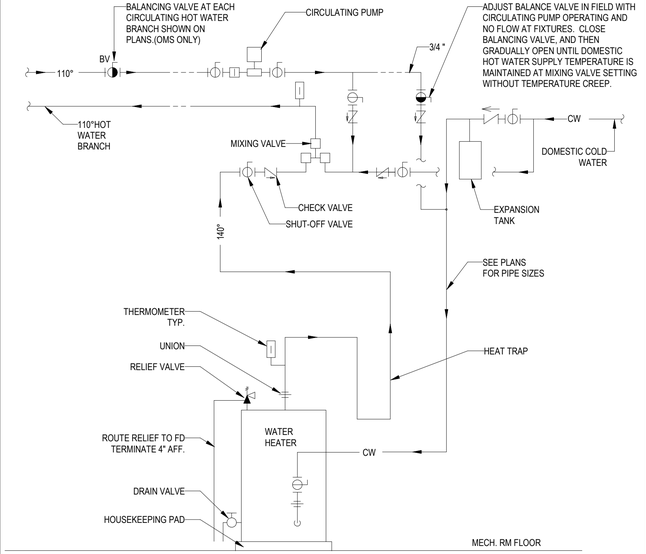

5 P-603 WATER HEATER PIPING DETAIL - SINGLE
NOT TO SCALE

ARCHITECTS IN PARTNERSHIP

ARCHITECTS
INTERIOR DESIGNERS
PLANNERS

3220 MARSHALL AVENUE
NORMAN, OK 73072
TEL: 405.360.1300
FAX: 405.360.1431

SEAL:
LICENSED PROFESSIONAL ENGINEER
BRIAN E. ALLEN
33037
OKLAHOMA
08/08/22

HENNESSEY FIRE DEPARTMENT
REMODEL/ADDITION
HENNESSEY, OKLAHOMA
501 S. MAIN STREET

REVISIONS

REV.	DATE	DESCRIPTION

PROJ. MANAGER: SAT
DRAWN BY: BEA
CHECKED BY: SAT

DATE: 08/08/2022
PROJECT NO.: 2111

SHEET TITLE: PLUMBING DETAILS

SHEET NO.: P-603

MOXIFY
4334 NW EXPRESSWAY
SUITE 156
OKLAHOMA CITY, OK 73116
PHONE: (405) 254-5038
www.moxifyengineering.com
PROJECT: 501106
CA: 7612 EXP: 06/30/23

KEYNOTES

1. 4" FCO THAT CAN BE EXTENDED AS NEEDED FOR SECOND FLOOR BUILDOUT.
2. COORDINATE WITH GC, EXTEND 4" SS ABOVE CEILING AND TERMINATE WITH CLEANOUT THAT CAN BE EXTENDED AS NEEDED FOR SECOND FLOOR BUILDOUT. CONCEAL PIPE AND PROVIDE WCO AT 2' AFF.
3. EXTEND 4" SS ABOVE CEILING, AVOIDING VENT PIPE AND TERMINATING WITH CLEANOUT THAT CAN BE USED TO SERVE SECOND FLOOR BUILDOUT.
4. COORDINATE COMBINATION WASTE/VENT LOCATION ABOVE CEILING TO AVOID DUCTWORK FROM MECHANICAL ROOM ABOVE. ROUTE SS DRAIN UP TO FLOOR DRAIN SERVING SECOND FLOOR MECHANICAL ROOM.

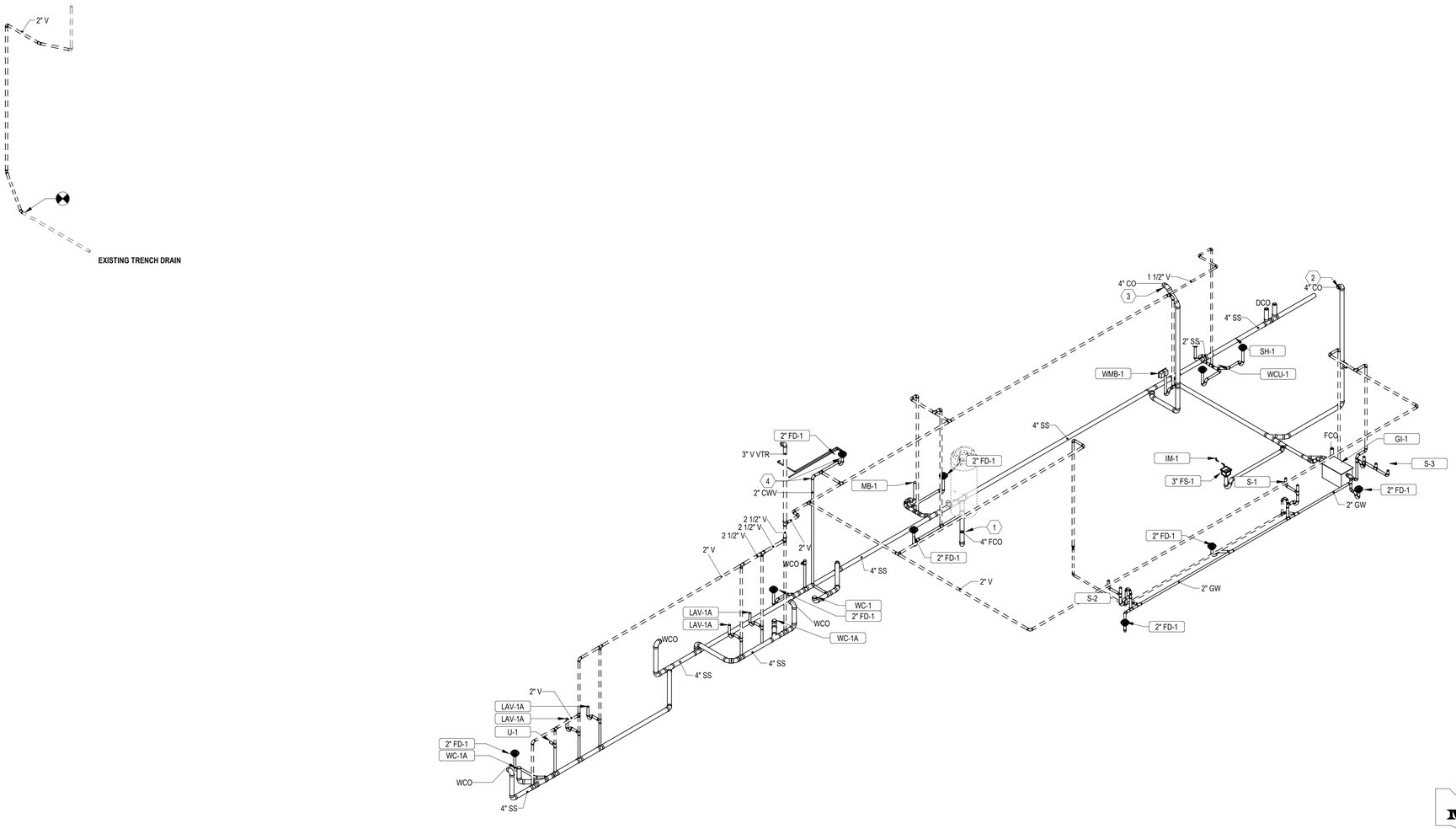

1 P-701 WASTE & VENT RISER DIAGRAM

MOXIFY
4334 NW EXPRESSWAY
SUITE 156
OKLAHOMA CITY, OK 73116
PHONE: (405) 254-5038
www.moxifyengineering.com
PROJECT: 501106
CA: 7612 EXP: 06/30/23

ARCHITECTS IN PARTNERSHIP

ARCHITECTS
INTERIOR DESIGNERS
PLANNERS

3220 MARSHALL AVENUE
NORMAN, OK 73072
TEL: 405.360.1300
FAX: 405.360.1431

SEAL:

LICENSED PROFESSIONAL ENGINEER
BRIAN E. ALLEN
33037
OKLAHOMA
08/08/22

HENNESSEY FIRE DEPARTMENT

REMODEL/ADDITION

HENNESSEY, OKLAHOMA

501 S. MAIN STREET

REVISIONS

REV.	DATE	DESCRIPTION

PROJ. MANAGER:	SAT
DRAWN BY:	BEA
CHECKED BY:	SAT

DATE: 08/08/2022

PROJECT NO.: 2111

SHEET TITLE: WASTE & VENT RISER DIAGRAMS

SHEET NO.: P-701

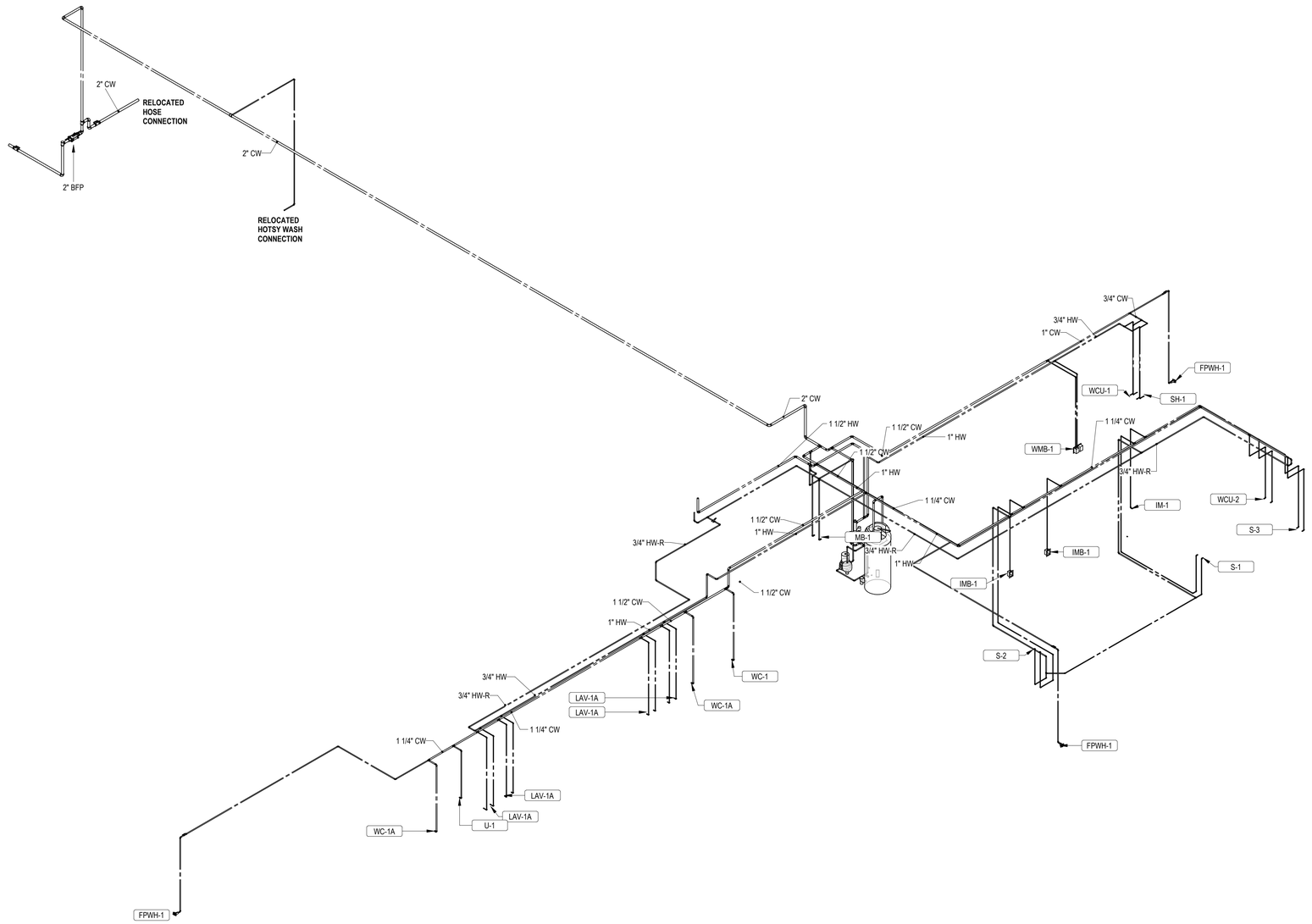

1 P-702 DOMESTIC WATER RISER DIAGRAM

MOXIFY
4334 NW EXPRESSWAY
SUITE 156
OKLAHOMA CITY, OK 73116
PHONE: (405) 254-5038
www.moxifyengineering.com
PROJECT: 501106
CA: 7612 EXP: 06/30/23

ARCHITECTS IN PARTNERSHIP

ARCHITECTS
INTERIOR DESIGNERS
PLANNERS

3220 MARSHALL AVENUE
NORMAN, OK 73072
TEL: 405.360.1300
FAX: 405.360.1431

SEAL:

LICENSED PROFESSIONAL ENGINEER
BRIAN E. ALLEN
33037
OKLAHOMA
08/08/22

HENNESSEY FIRE DEPARTMENT

REMODEL/ADDITION

HENNESSEY, OKLAHOMA

501 S. MAIN STREET

REVISIONS

REV.	DATE	DESCRIPTION

PROJ. MANAGER:	SAT
DRAWN BY:	BEA
CHECKED BY:	SAT
DATE:	08/08/2022
PROJECT NO.:	2111

SHEET TITLE: DOMESTIC RISER DIAGRAM

SHEET NO.: P-702

GENERAL MECHANICAL ABBREVIATIONS

Ø	ROUND
ABV	ABOVE
AC	AIR CONDITIONING
ACCU	AIR-COOLED UNIT
AD	ACCESS DOOR, AREA DRAIN
ADD	ADDENDUM
ADJ	ADJUSTABLE, ADJACENT
AFCV	AIRFLOW CONTROL VALVE
AFF	ABOVE FINISHED FLOOR
AFG	ABOVE FINISHED GRADE
AFMS	AIRFLOW MEASURING STATION
AFUE	ANNUAL FUEL UTILIZATION EFFICIENCY
AGA	AMERICAN GAS ASSOCIATION
AHJ	AUTHORITY HAVING JURISDICTION
AHU	AIR HANDLING UNIT
AHRI	AIR-CONDITIONING, HEATING, AND CONTROL ASSOCIATION
ALT	ALTERNATE
AMCA	AIR MOVEMENT AND CONTROL ASSOCIATION
ANSI	AMERICAN NATIONAL STANDARDS INSTITUTE
AP	ACCESS PANEL
APD	AIR PRESSURE DROP
ARCH	ARCHITECT/ARCHITECTURAL
AS	AIR SEPARATOR
ASCE	AMERICAN SOCIETY OF CIVIL ENGINEERS
ASHRAE	AMERICAN SOCIETY OF HEATING, REFRIGERATION, AND AIR-CONDITIONING ENGINEERS
ASME	AMERICAN SOCIETY OF MECHANICAL ENGINEERS
ASPE	AMERICAN SOCIETY OF PLUMBING ENGINEERS
ASTM	AMERICAN SOCIETY FOR TESTING AND MATERIALS
AVG	AVERAGE
AWS	AMERICAN WELDING SOCIETY
BAS	BUILDING AUTOMATION SYSTEM
BCU	BLOWER COIL UNIT
BDD	BACKDRAFT DAMPER
BFF	BELOW FINISHED FLOOR
BFP	BACKFLOW PREVENTER
BHP	BRAKE HORSE POWER
BLW	BELOW
BTU	BRITISH THERMAL UNITS
BTUH	BRITISH THERMAL UNITS PER HOUR
C	CELSIUS
CAP	CAPACITY
CB	CATCH BASIN
CC	COOLING COIL
CFM	CUBIC FEET PER MINUTE
CH	CHILLER
CLG	CEILING
CO	CLEAN OUT, CARBON MONOXIDE
CO2	CARBON DIOXIDE
COMM	COMMUNICATIONS
COP	COEFFICIENT OF PERFORMANCE
CP	CONDENSATE PUMP
CPVC	CHLORINATED POLYVINYL CHLORIDE
CR	CONDENSATE RETURN
CSR	CURRENT SENSING RELAY
CT	COOLING TOWER
CTI	COOLING TECHNOLOGY INSTITUTE
CU	CONDENSING UNIT
CV	CONSTANT VOLUME, CONTROL VALVE
CW	COLD WATER
CWP	CHILLED WATER PUMP
CWR	CHILLED WATER RETURN
CWS	CHILLED WATER SUPPLY
dB	DECIBEL
dBA	DECIBEL A-WEIGHTING
D	DEGREE
DB	DRY BULB
DCW	DOMESTIC COLD WATER
DDC	DIRECT DIGITAL CONTROL
DEG	DEGREE(S)
DHW	DOMESTIC HOT WATER
DHWR	DOMESTIC HOT WATER RETURN
DIA	DIAMETER
DN	DOWN
DW	DISTILLED WATER
DWH	DOMESTIC WATER HEATER
DWV	DRAIN, WASTE, VENT
DX	DIRECT EXPANSION
EA	EXHAUST AIR, EACH
EAT	ENTERING AIR TEMPERATURE
EC	ELECTRICAL CONTRACTOR
ECC	ENVIRONMENTAL CONTROL CONTRACTOR
ECG	EGGCRATE GRILLE
EER	ENERGY EFFICIENCY RATIO
EF	EXHAUST FAN
EG	EXHAUST GRILLE
EH	EXHAUST HOOD
ELEC	ELECTRICAL
EMG	EXTRUDED METAL GRILLE
EMS	ENERGY MANAGEMENT SYSTEM
EQUIP	EQUIPMENT
ESP	EXTERNAL STATIC PRESSURE
ET	EXPANSION TANK
ETC	ET CETERA
EWC	ELECTRIC WATER COOLER
EWT	ENTERING WATER TEMPERATURE
EXIST	EXISTING
EXT	EXTERIOR
F	DEGREES FAHRENHEIT
F/SD	FIRE/SMOKE DAMPER
FAC	FIRE ALARM CONTRACTOR
FAR	FIRE ALARM RELAY
FAS	FIRE ALARM SYSTEM
FCO	FLOOR CLEAN OUT
FCU	FAN COIL UNIT
FD	FIRE DAMPER, FLOOR DRAIN
FDV	FIRE DEPARTMENT VALVE
FEMA	FEDERAL EMERGENCY MANAGEMENT AGENCY
FEP	FIELD EQUIPMENT PANEL
FL, FLR	FLOOR
FM	FLW METER
FO	FUEL OIL
FOV	FUEL OIL VENT
FOR	FUEL OIL RETURN
FOS	FUEL OIL SUPPLY
FP	FREEZE PROTECTION
FPM	FEET PER MINUTE
FPRH	FREEZE PROOF ROOF HYDRANT
FS	FLOOR SINK
FT	FOOT/FEET
FTR	FIN TUBE RADIATOR
FURN	FURNACE UNIT
G	GAS
GA	GAGE, GUAGE
GAL	GALLON
GC	GENERAL CONTRACTOR
GCO	GRADE CLEAN OUT
GPM	GALLONS PER MINUTE
GW	GREASE WASTE
HB	HOSE BIB
HC	HEATING COIL
HEPA	HIGH EFFICIENCY PARTICULATE AIR
HP	HEAT PUMP, HORSE POWER
HSTAT	HUMIDISTAT
HTG	HEATING
HTR	HEATER
HVAC	HEATING, VENTILATION, AND AIR CONDITIONING
HW	HOT WATER
HWP	HEATING WATER PUMP
HWR	HEATING WATER RETURN
HWS	HEATING WATER SUPPLY
HX	HEAT EXCHANGER
HYD	HYDRANT
I/O	INPUT/OUTPUT
IBC	INTERNATIONAL BUILDING CODE
ID	INDIRECT, INNER DIAMETER
IFB	INTEGRAL FACE/BYPASS
IFGC	INTERNATIONAL FUEL GAS CODE
IH	INTAKE HOOD
ILK	INTERLOCK
IMC	INTERNATIONAL MECHANICAL CODE
IN	INCH(ES)
INV	INVERT
IPC	INTERNATIONAL PLUMBING CODE
LA	LEAVING AIR
LAN	LOCAL AREA NETWORK
LAT	LEAVING AIR TEMPERATURE
LAV	LAVATORY
LB	POUND(S)
LB/HR	POUNDS PER HOUR
LAT	LEAVING AIR TEMPERATURE
LP	LOW PRESSURE
LPG	LIQUEFIED PETROLEUM GAS
LV	LOUVER
LWT	LEAVING WATER TEMPERATURE
MA	MIXED AIR, MEDICAL AIR
MAT	MIXED AIR TEMPERATURE
MAU	MAKEUP AIR UNIT
MAX	MAXIMUM
MBH	ONE THOUSAND BTU PER HOUR
MC	MECHANICAL CONTRACTOR
MCA	MINIMUM CIRCUIT AMPACITY
MCC	MOTOR CONTROL CENTER
MCF	ONE THOUSAND CUBIC FEET
MD	MOTORIZED DAMPER
MECH	MECHANICAL
MFR	MANUFACTURER
MG	MEDICAL GAS
MIN	MINIMUM
MISC	MISCELLANEOUS
MOCP	MAXIMUM OVERCURRRENT PROTECTION
MS	MOP SINK
MTR	MOTOR
MV	MEDICAL VACUUM
N2	NITROGEN
N2O	NITROUS OXIDE
NC	NOISE CRITERIA, NORMALLY CLOSED
NEC	NATIONAL ELECTRICAL CODE
NEMA	NATIONAL ELECTRICAL MANUFACTURER'S ASSOCIATION
NFC	NATIONAL FIRE CODE
NFPA	NATIONAL FIRE PROTECTION ASSOCIATION
NIC	NOT IN CONTRACT
NO	NORMALLY OPEN, NUMBER
NTS	NOT TO SCALE
O2	OXYGEN
OA	OUTDOOR AIR
OAT	OUTDOOR AIR TEMPERATURE
OC	ON CENTER
OCC	OCCUPANCY
OD	OUTSIDE DIAMETER
OFCI	OWNER FURNISHED, CONTRACTOR INSTALLED
ORD	OVERFLOW ROOF DRAIN
OSHA	OCCUPATIONAL SAFETY AND HEALTH ADMINISTRATION
PC	PLUMBING CONTRACTOR
PD	PRESSURE DROP
PH, Ø	PHASE
PHC	PREHEAT COIL
PIV	POST INDICATOR VALVE
PKG	PACKAGE
PLBG	PLUMBING
PM	PRESSURE MONITOR
PPM	PARTS PER MILLION
PRESS	PRESSURE
PRV	PRESSURE REDUCING VALVE
PS	PRESSURE SENSOR
PSI	POUNDS PER SQUARE INCH
PSIA	PSI ABSOLUTE
PSIG	POUNDS PER SQUARE INCH GAUGE
PTAC	PACKAGED TERMINAL AIR CONDITIONER
PVC	POLYVINYL CHLORIDE
PWR	POWER
R	DUCT RISER
RA	RETURN AIR
RAT	RETURN AIR TMPERATURE
RCP	RADIANT CEILING PANEL
RD	ROOF DRAIN, RETURN DIFFUSER
REC	RECESSED
RED	REDUCER
RF	RETURN FAN
RG	RETURN GRILLE
RH	RELATIVE HUMIDITY, ROOF HATCH, RELIEF HOOD
RHC	REHEAT COIL
RL/A	RELIEF AIR
RM	ROOM
RO	REVERSE OSMOSIS WATER
RPM	REVOLUTIONS PER MINUTE
RTU	ROOFTOP UNIT
RV	ROOF VENT
RW	RAIN WATER
S15	STEAM AT PRESSURE NOTED
SA	SUPPLY AIR
SAN	SANITARY
SAT	SUPPLY AIR TEMPERATURE
SD	SUPPLY DIFFUSER, SMOKE DAMPER, STORM DRAIN
SEER	SEASONAL ENERGY EFFICIENCY RATIO
SEI	STRUCTURAL ENGINEERING INSTITUTE
SF	SQUARE FOOT
SG	SUPPLY GRILLE
SM	SURFACE MOUNT
SMACNA	SHEET METAL AND AIR-CONDITIONING CONTRACTORS ASSOCIATION
SP	STANDPIPE, STATIC PRESSURE
SPEC	SPECIFICATION
SQ	SQUARE
SRV	SAFETY RELIEF VALVE
SS	SANITARY SEWER
STM	STEAM
T	THERMOSTAT, TON(S)
TAB	TESTING, ADJUSTING, AND BALANCING
TD	TEMPERATURE DROP
TDR	TRENCH DRAIN
TEMP	TEMPERATURE
TP	TOTAL PRESSURE
TSP	TOTAL STATIC PRESSURE
TSTAT	THERMOSTAT
TWP	TOWER WATER PUMP
TWR	TOWER WATER RETURN
TWS	TOWER WATER SUPPLY
TYP	TYPICAL
UG	UNDERGROUND
UH	UNIT HEATER
UL	UNDERWRITER'S LABORATORIES
UON	UNLESS OTHERWISE NOTED
UV	ULTRAVIOLET
V	VENT, VOLT
VAC	VACUUM
VAV	VARIABLE AIR VOLUME
VENT	VENTILATION
VFD	VARIABLE FREQUENCY DRIVE
VP	VELOCITY PRESSURE
VTR	VENT THROUGH ROOF
W	WASTE, WATT
W/	WITH
W/O	WITHOUT
WAGD	WASTE ANESTHESIA GAS DISPOSAL
WB	WET BULB
WC	WATER CLOSET
WCO	WALL CLEAN OUT
WG	WATER GAGE
WH	WALL HYDRANT
WPD	WATER PRESSURE DROP
YCO	YARD CLEANOUT
YD	YARD DRAIN
(E)	EXISTING

HVAC SYMBOLS

REVISION NUMBER - SHOWN ON PLANS

POINT WHERE NEW CONNECTS TO EXISTING

NUMBER OF DETAIL ON SHEET
NUMBER OF SHEET WHERE DETAIL APPEARS

KEYNOTE

CONTINUATION SYMBOL

Room
5
ROOM NAME AND NUMBER

ITEM TO BE DEMOLISHED

AREA NOT IN CONTRACT

2" — PIPE SIZE TAG (DIAMETER)

ABOVE GROUND PIPING

1/8" / 12" SLOPE — PIPE SLOPE TAG

BELOW GROUND PIPING

INVERT: -105' - 1" — PIPE INVERT ELEVATION TAG

(E) — EXISTING PIPE TAG

PIPING BEING DEMOLISHED

16"x8" — SQUARE DUCT SIZE TAG (WIDTH x HEIGHT)

16"/8" — OVAL DUCT SIZE TAG (WIDTH / HEIGHT)

16"Ø — ROUND DUCT SIZE TAG (DIAMETER)

(E) — EXISTING DUCT TAG

DUCT BEING DEMOLISHED

DROP — RECTANGULAR SUPPLY/OUTSIDE AIR DUCT RISE

DROP — ROUND SUPPLY/OUTSIDE AIR DUCT RISE

DROP — RECTANGULAR RETURN/TRANSFER AIR DUCT RISE

DROP — ROUND RETURN/TRANSFER AIR DUCT RISE

DROP — RECTANGULAR EXHAUST/RELIEF AIR DUCT RISE

DROP — ROUND EXHAUST/RELIEF AIR DUCT RISE

GRILLES, REGISTERS & DIFFUSERS TAG

MECHANICAL EQUIPMENT TAGS

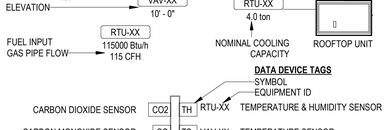

DATA DEVICE TAGS

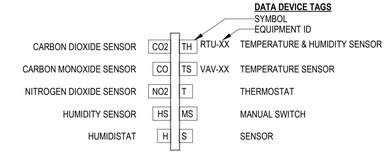

DAMPER TAGS

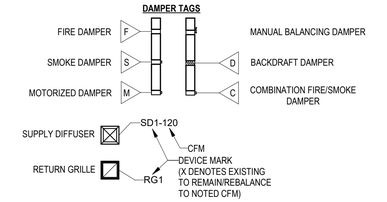

PIPING SYMBOLS

CWR	CHILLED WATER RETURN
CWS	CHILLED WATER SUPPLY
CD	CONDENSATE DRAINAGE
CR	CONDENSER WATER RETURN
CS	CONDENSER WATER SUPPLY
GWR	GEOTHERMAL WATER RETURN
GWS	GEOTHERMAL WATER SUPPLY
HWR	HEATING WATER RETURN
HWS	HEATING WATER SUPPLY
RL	REFRIGERANT-LIQUID
RS	REFRIGERANT-SUCTION
RHG	REFRIGERANT-HOT GAS
STM	STEAM

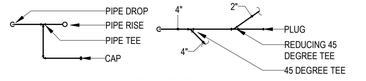

PIPE ACCESSORY TAGS

2" DOM. WM — DOMESTIC WATER METER	2" M-CNTRL — MOTORIZED CONTROL VALVE
2" BALANCING — BALANCING VALVE	2" 3-WAY CNTRL — 3 WAY MOTORIZED CONTROL VALVE
2" SHUTOFF — 1/4 TURN BALL VALVE	2" PRV — PRESSURE REDUCING VALVE
2" CHECK — CHECK VALVE	3/8" SOLENOID — REFRIGERANT SOLENOID VALVE
2" TMV — 3-WAY MIXING VALVE	2" BUTTERFLY — BUTTERFLY VALVE

EQUIPMENT ABBREVIATIONS

AC	AIR CONDITIONING UNIT	ET	EXPANSION TANK
ACCU	AIR COOLING CONDENSING UNIT	EWH	ELECTRIC WATER HEATER
AHU	AIR HANDLING UNIT	FCU	FAN COIL UNIT
AS	AIR SEPARATOR	FP	FIRE PUMP
B	BOILER	GI	GREASE INTERCEPTOR
CH	CHILLER	GRV	GRAVITY ROOF VENTILATOR
CT	COOLING TOWER	HWP	HEATING WATER PUMP
CUH	CABINET UNIT HEATER	HRU	HEAT RECOVERY UNIT
CHWP	CHILLED WATER PUMP	PRV	POWER ROOF VENTILATOR
DBP	DOMESTIC WATER BOOSTER PUMP	RE	RETURN/EXHAUST FAN
DC	DUCT MOUNTED COIL	RTU	ROOFTOP UNIT
DCP	DOMESTIC WATER CIRCULATING PUMP	SP	SUMP PUMP
EF	EXHAUST FAN	UH	UNIT HEATER
EDC	ELECTRIC DUCT COIL	WH	WATER HEATER

HVAC GENERAL NOTES

A SUPPLY AND RETURN PIPING TO COILS ARE THE SAME SIZE.

B CONTRACTOR SHALL LOCATE THERMOSTATS AND TEMPERATURE SENSORS AT 48" AFF, A MINIMUM OF 8" FROM LIGHT SWITCH.

C REFER TO PIPING DRAWINGS FOR THERMOSTAT AND TEMPERATURE SENSOR LOCATIONS.

D CONDENSATE DRAINS SHALL BE SUPPLIED FOR ALL COOLING EQUIPMENT. CONTRACTOR SHALL ENSURE PROPER INSTALLATION AND DRAINAGE AS REQUIRED BY FEDERAL, STATE, AND LOCAL CODES. CONDENSATE PIPING SHALL BE TYPE "L" COPPER.

E PROVIDE A 4" HOUSEKEEPING PAD FOR EACH PIECE OF MECHANICAL EQUIPMENT. COORDINATE SIZES WITH MECHANICAL EQUIPMENT SELECTED.

F CONTRACTOR SHALL BE REQUIRED TO REPLACE FILTERS ON HVAC EQUIPMENT AFTER ALL DUST PRODUCING CONSTRUCTION HAS BEEN COMPLETED AND PRIOR TO THE FINAL PUNCH.

G ALL HWS&R RUNOUTS ARE TO BE 3/4" UNLESS NOTED OTHERWISE.

H DO NOT BLOCK DUCTWORK ACCESS DORS WITH PIPING OR OTHER DUCTWORK.

I REFER TO SCHEDULES FOR RUNOUT SIZES TO DIFFUSER AND TERMINAL UNITS. PROVIDE FRAME STYLE APPROPRIATE FOR CEILING TYPE (LAY-IN OR SURFACE MOUNT)

J WHERE THE INTERIOR OF DUCTWORK IS VISIBLE THROUGH A DIFFUSER/GRILLE, THE INSIDE OF THE DUCT SHALL BE PAINTED WITH A FLAT BLACK PRIMER.

K REFER TO ARCHITECTURAL REFLECTED CEILING PLANS FOR EXACT LOCATIONS OF CEILING DIFFUSERS/GRILLES.

L INSTALL VOLUME DAMPERS AT ALL DIFFUSER/GRILLE TAKEOFFS FOR BALANCING.

M INSTALL FIRE DAMPERS FOR ALL DUCTWORK PENETRATIONS THROUGH FIRE-RATED WALLS. INSTALL SMOKE DAMPERS IN SMOKE BARRIER WALLS FOR I-2 AND I-3 OCCUPANCY CLASSIFICATIONS. INSTALL FIRE RATED CEILING DAMPERS IN ALL ONE HOUR CEILINGS.

N OUTDOOR AIR INTAKES MUST BE A MINIMUM OF 25'-0" FROM ANY PLUMBING VENT, EXHAUST, OR FLUE.

O ROUTE CONDENSATE DRAIN PIPING FROM HVAC EQUIPMENT TO NEAREST FLOOR DRAIN. SUPPLY CONDENSATE PUMP IF REQUIRED.

PROJECT GENERAL NOTES

A ALL WORK AND MATERIAL SHALL COMPLY WITH ALL GOVERNING CODES, SAFETY ORDERS, AND REGULATIONS.

B CONTRACTOR SHALL OBTAIN AND PAY ALL NECESSARY PERMITS, FEES, AND INSPECTIONS REQUIRED BY GOVERNING AUTHORITIES.

C ANY EQUIPMENT OR DEVICE NOT LISTED AS REFERENCE PRODUCT ON THE SCHEDULE SHALL FIT IN THE SPACE PROVIDED WITH PROPER CLEARANCES INCLUDING ACCEPTABLE MANUFACTURERERS LISTED IN THE SPECIFICATIONS. CONTRACTOR SHALL SUBMIT A 1/4" SCALE DRAWING OF ALL EQUIPMENT DIFFERENT THAN THE REFERENCE PRODUCT FOR APPROVAL PRIOR TO INSTALLATION.

D BY NECESSITY, THESE DRAWINGS REFLECT SYSTEMS DESIGNED AROUND SPECIFIC REFERENCE PRODUCTS THE SOLUTION OF WHICH HAS IMPACTED DESIGNS OF OTHER DISCIPLINES (ELECTRICAL, ARCHITECTURAL, STRUCTURAL, PLUMBING, ETC). IF ALTERNATE MANUFACTURERS, FUEL SOURCES, SIZES, AND/OR MODEL NUMBERS ARE SUBMITTED AND APPROVED, IT IS THE RESPONSIBILITY OF THE GENERAL CONTRACTOR AND ALL SUBCONTRACTORS TO COORDINATE ALL DIFFERENCES PRIOR TO BID. THE SUBSTITUTING CONTRACTORS SHALL BE RESPONSIBLE FOR CHANGES REQUIRED TO OTHER TRADES IF ALTERNATE EQUIPMENT IS BID OR INSTALLED AT THE CONTRACTOR'S OPTION.

E ALL DRAWINGS ARE DIAGRAMMATIC IN NATURE. THE CONTRACTOR MAY AT THEIR OPTION MOIDFY PIPE ROUTING IN ORDER TO CREATE A SYSTEM THAT MEETS THE INTENT OF THIS SET OF CONSTRUCTION DOCUMENTS.

F ALL CONTRACT DOCUMENTS (SPECIFICATIONS AND DRAWINGS) ARE COMPLIMENTARY AND MUST BE USED IN COMBINATION TO OBTAIN COMPLETE CONSTRUCTION INFORMATION. ALL CONFLICTS SHALL BE BROUGHT TO THE ARCHITECTS OR ENGINEER'S ATTENTION IN ORDER TO ALLOW A CLARIFICATION TO BE ISSUED. ANY WORK COMPLETED WITHOUT THE CLARIFYING INFORMATION IS AT THE CONTRACTOR'S FINANCIAL RISK.

G LOCATE ALL TERMINAL UNITS, DAMPERS, VALVES, AND OTHER EQUIPMENT REQUIRING ACCESS ABOVE LAY-IN CEILING. IF EQUIPMENT MUST BE LOCATED ABOVE GYPSUM CEILING OR ANOTHER TYPE OF INACCESSIBLE CEILING, INSTALL ACCESS PANELS AND COORDINATE THE LOCATION WITH GENERAL CONTRACTOR.

H DO NOT RUN ANY HVAC/PLUMBING PIPING, DUCTWORK, OR ANY OTHER ITEMS ABOVE I.T., TELECOM, OR ELECTRICAL ROOMS UNLESS IT SERVES JUST THAT ROOM

I THE MECHANICAL CONTRACTOR SHALL BE RESPONSIBLE FOR FIELD VERIFYING, PRIOR TO FINAL BID, ALL EXISTING CONDITIONS FOR PLUMBING AND MECHANICAL SYSTEMS WITHIN TENANT SPACE AND WITHIN CLOSE PROXIMITY OF TENANT SPACE.

J THE MECHANICAL CONTRACTOR SHALL REVIEW EXISTING EQUIPMENT TO BE REUTILIZED UNDER THIS PROJECT AND COMPILE A CONDITIONS REPORT FOR THE OWNER.

K WHERE FLOOR DRAINS OCCUR WITHIN THE LIMITS OF CONSTRUCTION, PREVENT CONSTRUCTION DEBRIS FROM ENTERING DRAIN BODY BY SEALING DRAIN OPENING PRIOR TO START OF WORK. UNSEAL DRAINS AT COMPLETION OF CONSTRUCTION.

L COORDINATE INSTALLATION OF PIPING, DUCTWORK, CONDUIT, LIGHTS, CABLE TRAY, STRUCTURE, AND EQUIPMENT TO PREVENT CONFLICTS.

M THE CONTRACTOR SHALL BE FAMILIAR WITH ALL THE CONDITIONS BOTH EXISTING AND THOSE ILLUSTRATED BY THESE DOCUMENTS AS WELL AS THOSE WHICH CAN BE REASONABLY ANTICIPATED INCLUDING, BUT NOT LIMITED TO ARCHITECTURAL, ELECTRICAL, VENTILATION, PLUMBING, AND OTHER SYSTEMS INVOLVED ON THIS PROJECT.

N REMOVE ALL UNUSED PIPING, DUCTWORK AND ACCESSORIES.

O FINAL PRODUCT SHALL BE A COMPLETE AND FUNCTIONING SYSTEM, AND SHALL CONFORM TO ALL REQUIREMENTS OF APPLICABLE FEDERAL, STATE, AND LOCAL CODES, INCLUDING BUT NOT LIMITED TO THE INTERNATIONAL BUILDING CODE AND INTERNATIONAL MECHANICAL CODE.

P LOCATE EQUIPMENT REQUIRING ACCESS 2'-0" MAXIMUM ABOVE CEILING.

Q ALL ROOF MOUNTED EQUIPMENT SHALL BE A MINIMUM 10'-0" FROM EDGE OF ROOF.

R LOCATE DUCTWORK, PIPING AND MECHANICAL EQUIPMENT AWAY FROM THE SPACE ABOVE ELECTRICAL PANELS. TRANSFORMERS AND OTHER ELECTRICAL EQUIPMENT.

S FIRE SEAL AROUND DUCT AND PIPING PENETRATIONS OF FIRE RATED WALLS. REFER TO SPECIFICATION.

T PROVIDE SLEEVES AND/OR OPENINGS TO RUN PIPES AND DUCTS THROUGH FOUNDATIONS, FLOORS, WALLS, AND ROOF.

U ADJUST PIPING AND DUCTWORK SIZES TO PROPERLY CONNECT TO MECHANICAL EQUIPMENT.

V REFER TO PLUMBING SERIES DRAWINGS FOR GAS PIPING.

W PIPE SIZES SHOWN SHALL BE CONTINUED IN THE DIRECTION OF FLOW UNTIL ANOTHER SIZE IS SHOWN.

X FOR DETAILS, EQUIPMENT CONNECTIONS, AND PIPE SIZES NOT SHOWN ON THE SEGMENTS, REFER TO DETAILS, SCHEDULES, AND SPECIFICATIONS.

Y INSTALL ALL EQUIPMENT IN ACCORDANCE WITH THE RESPECTIVE MANUFACTURER'S WRITTEN INSTALLATION INSTRUCTIONS, AT A LEVEL OF QUALITY AND WORKMANSHIP CONSISTENT WITH THE SPECIFICATIONS.

Z LOCATIONS OF PIPING, DUCTWORK AND EQUIPMENT AS INDICATED ON THE DRAWING, ARE APPROXIMATE AND SUBJECT TO ADJUSTMENTS IN THE FIELD. WORK SHALL BE COORDINATED WITH ALL OTHER TRADES TO AVOID INTERFERENCE IN THE FIELD.

ZZ INSTALL EXPOSED PIPING AND DUCTWORK AS HIGH AS PRACTICAL IN ROOMS WITHOUT CEILINGS.

HVAC SHEET INDEX

M-001 HVAC GENERAL
M-101 FIRST FLOOR MECHANICAL DEMOLITION PLAN
M-211 FIRST FLOOR HVAC PLAN
M-221 SECOND FLOOR HVAC PLAN
M-501 HVAC SCHEDULES
M-601 HVAC DETAILS
M-602 HVAC DETAILS
M-603 HVAC DETAILS
M-604 HVAC DETAILS

* NOTE *

ALL OF GENERAL NOTES ON THIS SHEET ARE TO BE APPLIED TO ALL OTHER DRAWINGS IN THIS SET.THE SYMBOLS AND ABBREVIATIONS SHOWN ON THIS SHEET MAY OR MAY NOT BE USED IN THIS SET OF DRAWINGS.

ARCHITECTS IN PARTNERSHIP

ARCHITECTS
INTERIOR DESIGNERS
PLANNERS

3220 MARSHALL AVENUE
NORMAN, OK 73072
TEL: 405.360.1300
FAX: 405.360.1431

SEAL:



HENNESSEY FIRE DEPARTMENT
REMODEL/ADDITION
501 S. MAIN STREET
HENNESSEY, OKLAHOMA

REVISIONS

REV.	DATE	DESCRIPTION

PROJ. MANAGER:	SAT
DRAWN BY:	BEA
CHECKED BY:	SAT

DATE: 08/08/2022
PROJECT NO.: 2111

SHEET TITLE: HVAC GENERAL

SHEET NO.: M-001

MOXIFY
4334 NW EXPRESSWAY
SUITE 156
OKLAHOMA CITY, OK 73116
PHONE: (405) 254-5038
www.moxifyengineering.com
PROJECT: 501106
CA: 7612 EXP: 06/30/23

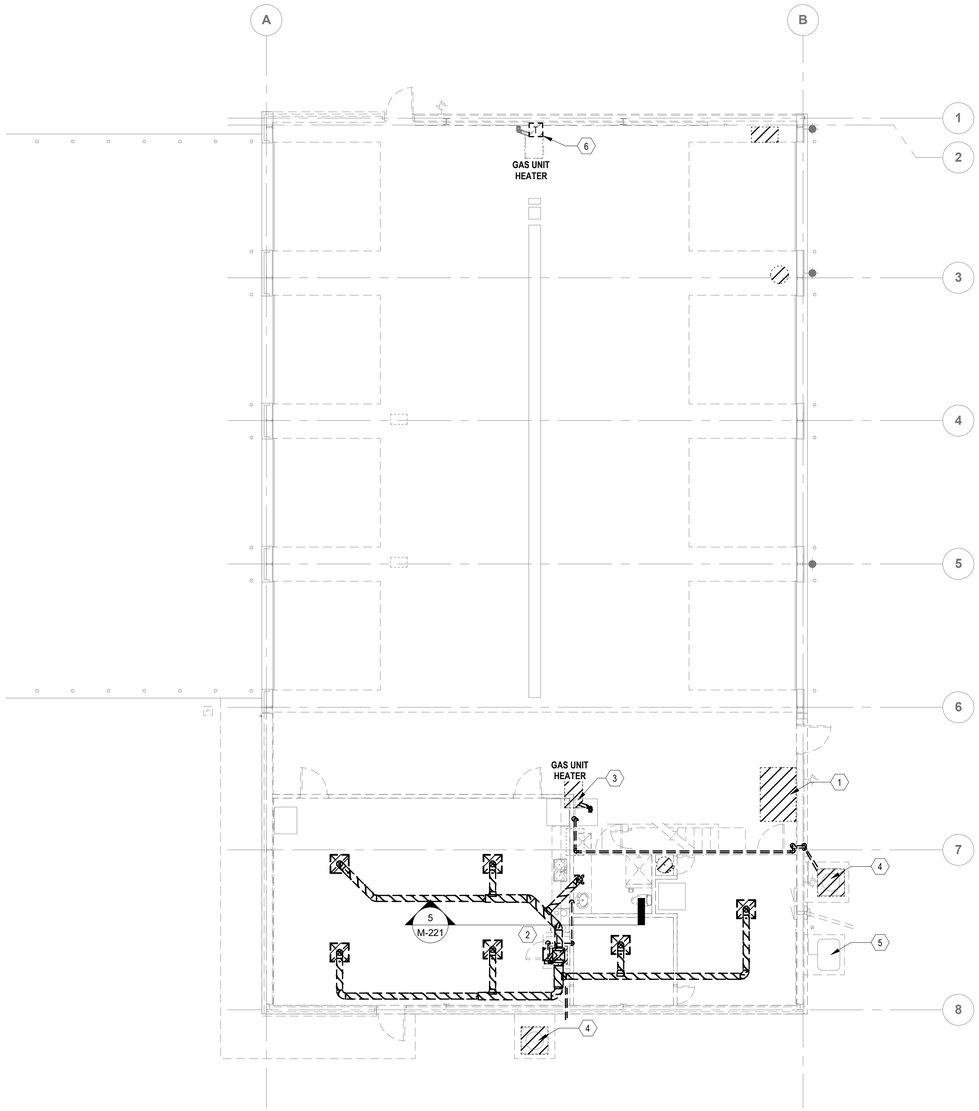

1 M-101 FIRST FLOOR HVAC DEMOLITION PLAN

1/8" = 1'-0"

0 4' 8' 16'

KEYNOTES

1. REMOVE EXISTING AIR COMPRESSOR AND CONNECTIONS. TO BE RELOCATED.
2. REMOVE EXISTING FURNACE AND DUCTWORK SYSTEM COMPLETE.
3. REMOVE AND RELOCATE EXISTING GAS UNIT HEATER. REMOVE EXISTING FLUE.
4. REMOVE EXISTING AIR CONDITIONING SYSTEM COMPLETE - CONDENSING UNIT, COIL, REFRIGERANT LINES, EQUIPMENT PAD, ETC.
5. EXISTING GENERATOR. REFER TO ELECTRICAL DRAWINGS.
6. EXISTING UNIT HEATER TO REMAIN. RELOCATE THERMOSTAT.

ARCHITECTS IN PARTNERSHIP

ARCHITECTS
INTERIOR DESIGNERS
PLANNERS

3220 MARSHALL AVENUE
NORMAN, OK 73072
TEL: 405.360.1300
FAX: 405.360.1431

SEAL:

LICENSED PROFESSIONAL ENGINEER
BRIAN E. ALLEN
33037
OKLAHOMA
08/08/22

HENNESSEY FIRE DEPARTMENT

REMODEL/ADDITION

501 S. MAIN STREET

HENNESSEY, OKLAHOMA

REVISIONS

REV.	DATE	DESCRIPTION

PROJ. MANAGER:	SAT
DRAWN BY:	BEA
CHECKED BY:	SAT

DATE: 08/08/2022

PROJECT NO.: 2111

SHEET TITLE: FIRST FLOOR MECHANICAL DEMOLITION PLAN

SHEET NO.: M-101

MOXIFY

4334 NW EXPRESSWAY
SUITE 156
OKLAHOMA CITY, OK 73116
PHONE: (405) 254-5038
www.moxifyengineering.com
PROJECT: 501106
CA: 7612 EXP: 06/30/23

KEYNOTES

1. INSTALL EXISTING HOTSY AT NEW LOCATION WITH GAS CONNECTION PER MANUFACTURER'S WRITTEN INSTRUCTIONS.
2. INSTALL EXISTING AIR COMPRESSOR AT NEW LOCATION WITH WITH PIPING TO EXISTING FLOATING HOSE REELS.
3. INSTALL EXHAUST FANS, CO, AND NO2 SENSORS FOR PARKING GARAGE AREA IN ACCORDANCE WITH IMC 2018 REQUIREMENTS FOR VENTILATION.
4. LOCATION OF RELOCATED STAND ALONE AIR COMPRESSOR. COORDINATE LOCATION WITH OWNER.
5. DUCTWORK TRANSITIONS TO/FROM SECOND LEVEL.
6. ROUTE EXHAUST DUCTWORK ABOVE THROUGH ROOF AND TERMINATE WITH GOOSENECK.
7. INSTALL DRYER DUCT TO WALL AND PAINT TO MATCH FINISH.
8. TERMINATE DRYER VENT DUCTWORK WITH SIDEWALL EXHAUST PER DETAIL.
9. COORDINATE CROSSING OF ELECTRICAL ROOM WITH ELECTRICAL CONTRACTOR.
10. LOCATION OF RELOCATED THERMOSTAT.
11. ROUTE DWH-1 COMBUSTION INTAKE AND FLUE DUCTWORK UP THROUGH ROOF WITH COMBINATION VENT AS INDICATED.
12. ROUTE REFRIGERANT LINES UP THRU FLOOR ENSURING FIRE RATING IS PRESERVED.
13. COORDINATE WITH OTHER TRADES AND INSTALL ICEMAKER WITH WATER FILTRATION SYSTEM AND PAIRED CONDENSING UNIT PREVIOUSLY REMOVED AND PRESERVED DURING DEMOLITION. FOLLOW MANUFACTURER'S WRITTEN INSTALLATION INSTRUCTIONS.

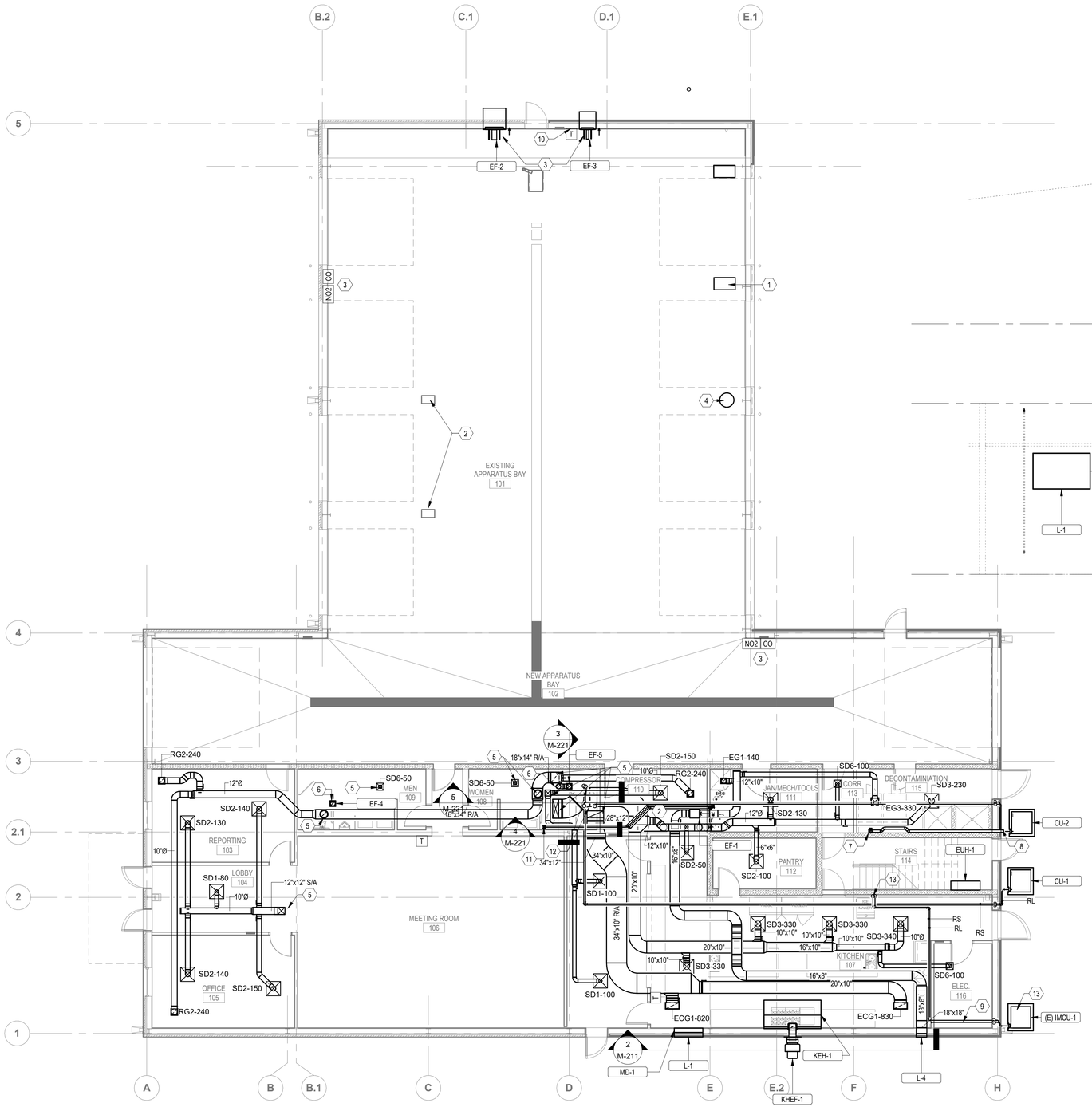

1 M-211 FIRST FLOOR HVAC PLAN
1/8" = 1'-0"
0 4' 8' 16'

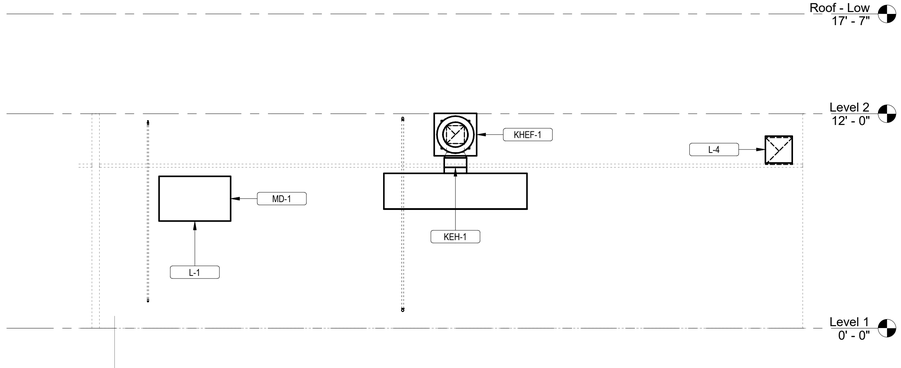

2 M-211 FIRST FLOOR MECHANICAL KITCHEN ELEVATION
1/4" = 1'-0"
0 2' 4' 8'

ARCHITECTS IN PARTNERSHIP

ARCHITECTS
INTERIOR DESIGNERS
PLANNERS

3220 MARSHALL AVENUE
NORMAN, OK 73072
TEL: 405.360.1300
FAX: 405.360.1431

SEAL:

LICENSED PROFESSIONAL ENGINEER
BRIAN E. ALLEN
33037
OKLAHOMA
08/08/22

HENNESSEY FIRE DEPARTMENT

REMODEL/ADDITION

HENNESSEY, OKLAHOMA

501 S. MAIN STREET

REVISIONS

REV.	DATE	DESCRIPTION

PROJ. MANAGER: SAT
DRAWN BY: BEA
CHECKED BY: SAT

DATE: 08/08/2022
PROJECT NO.: 2111

SHEET TITLE: FIRST FLOOR HVAC PLAN

SHEET NO.: M-211

MOXIFY

4334 NW EXPRESSWAY
SUITE 156
OKLAHOMA CITY, OK 73116
PHONE: (405) 254-5038
www.moxifyengineering.com
PROJECT: 501106
CA: 7612 EXP: 06/30/23

KEYNOTES

1. ROUTE SUPPLY DUCTWORK TO LEVEL BELOW.
2. ROUTE RETURN DUCTWORK THROUGH FLOOR WITH FIRE DAMPER TO LEVEL BELOW. SEE DETAIL.
3. TERMINATE WITH GOOSENECK ON ROOF. ROUTE EXHAUST DUCTWORK TO LEVEL BELOW.
4. INSTALL FIRE DAMPER FOR DUCT THROUGH RATED BARRIER. SEE DETAILS.
5. INSTALL UNIT HEATER PREVIOUSLY REMOVED DURING DEMOLITION AT 13'6" AFF TO CLEAR VEHICLES.
6. INSTALL COMBUSTION AIR INTAKE AND FLUE PER MANUFACTURER'S WRITTEN INSTRUCTIONS.
7. ROUTE RETURN DUCTWORK UP FROM LEVEL BELOW.
8. ROUTE DWH-1 COMBUSTION INTAKE AND FLUE DUCTWORK UP THROUGH ROOF WITH COMBINATION VENT AS INDICATED.
9. ROUTE REFRIGERANT LINES DOWN THRU FLOOR ENSURING FIRE RATING IS PRESERVED.

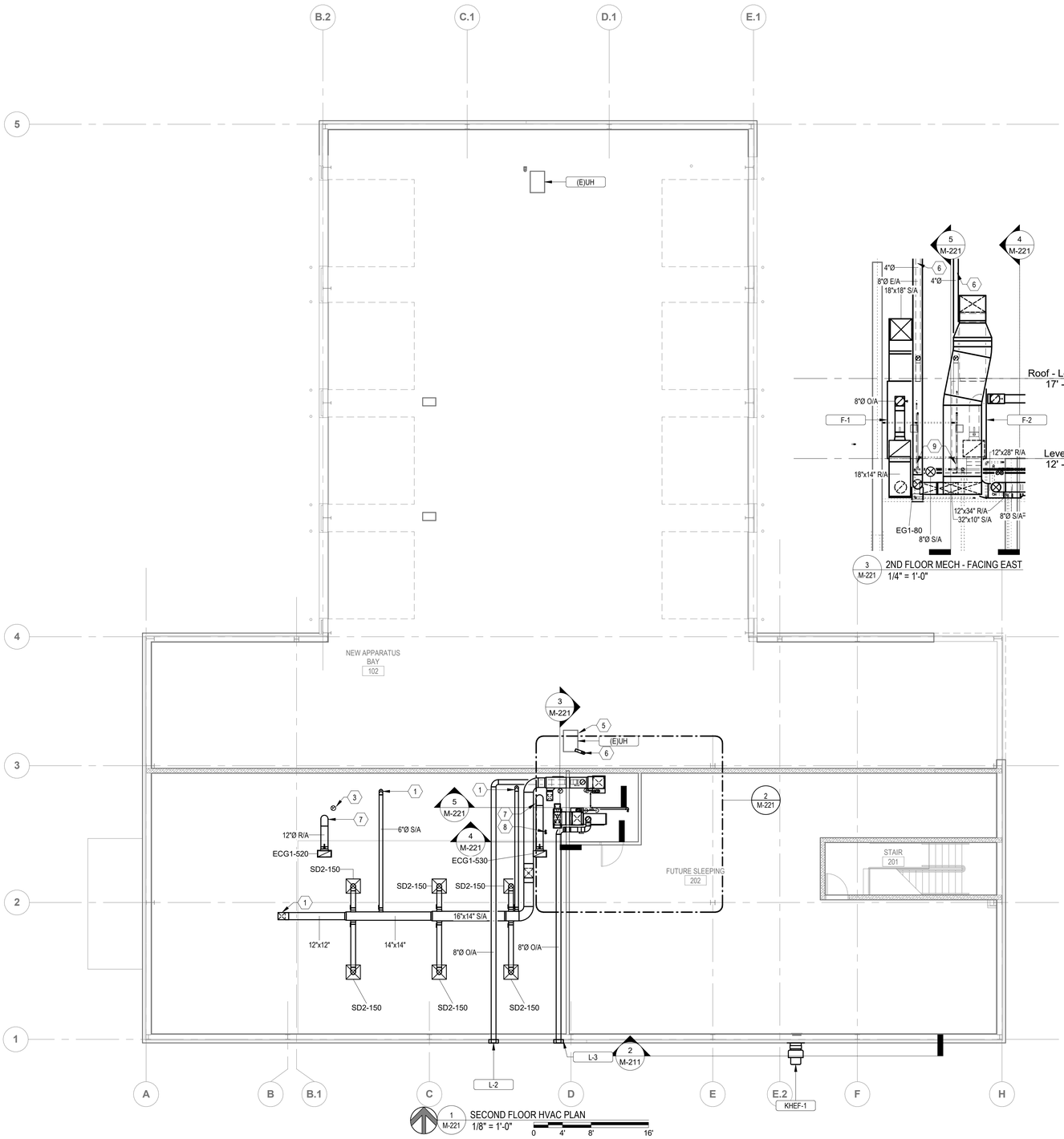

1 M-221 SECOND FLOOR HVAC PLAN
1/8" = 1'-0"
0 4' 8' 16'

3 M-221 2ND FLOOR MECH - FACING EAST
1/4" = 1'-0"

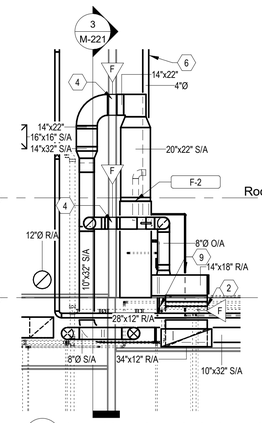

4 M-221 2ND FLOOR MECH - FACING NORTH F-2
1/4" = 1'-0"

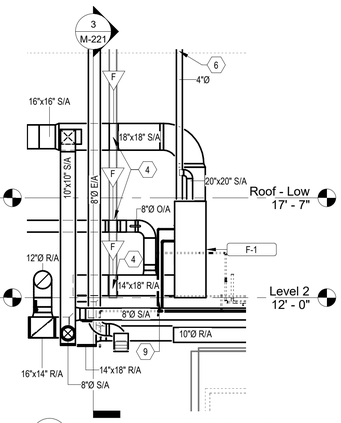

5 M-221 2ND FLOOR MECH - FACING NORTH F-1
1/4" = 1'-0"

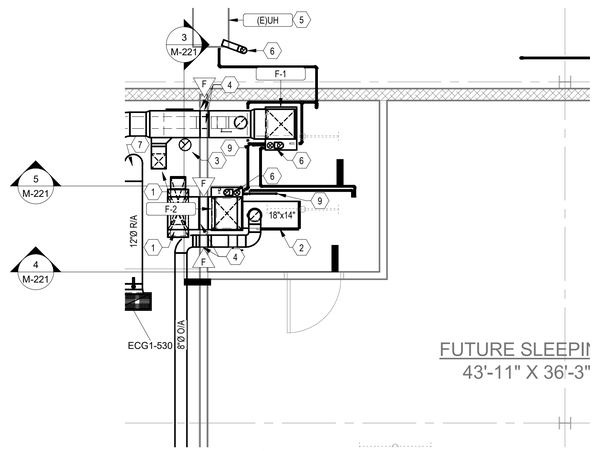

2 M-221 HVAC Plan-02 - Mechanical Room
1/4" = 1'-0"
0 2' 4' 8'

MOXIFY
4334 NW EXPRESSWAY
SUITE 156
OKLAHOMA CITY, OK 73116
PHONE: (405) 254-5038
www.moxifyengineering.com
PROJECT: 501106
CA: 7612 EXP: 06/30/23

ARCHITECTS IN PARTNERSHIP

ARCHITECTS
INTERIOR DESIGNERS
PLANNERS

3220 MARSHALL AVENUE
NORMAN, OK 73072
TEL: 405.360.1300
FAX: 405.360.1431

SEAL:
LICENSED PROFESSIONAL ENGINEER
BRIAN E. ALLEN
33037
OKLAHOMA
08/08/22

HENNESSEY FIRE DEPARTMENT
REMODEL/ADDITION
501 S. MAIN STREET
HENNESSEY, OKLAHOMA

REVISIONS		
REV.	DATE	DESCRIPTION

PROJ. MANAGER:	SAT
DRAWN BY:	BEA
CHECKED BY:	SAT
DATE:	08/08/2022
PROJECT NO.:	2111
SHEET TITLE:	SECOND FLOOR HVAC PLAN
SHEET NO.:	M-221

GAS-FIRED FURNACE SCHEDULE

ID	REFERENCE PRODUCT	MODEL NO.	TYPE	OUTSIDE AIR	FAN			COOLING COIL						GAS-FIRED HEAT EXCHANGER								AFUE	FILTER	UNIT WEIGHT	MCA	MOCP	VOLT	PH	REMARKS
					AIRFLOW	MOTOR			CAP	AIRSIDE				GAS BURNER					AIRSIDE										
																	FUEL												
				MIN	SUPPLY	QTY	POWER	NOMINAL CAP	TOTAL	SENSIBLE	EAT(db)	EAT(wb)	LAT(db)	LAT(wb)	INPUT	CAP	QTY	STAGES	TYPE	PRESS AVAIL	EAT(db)	LAT(db)		EFF						
F-1	TRANE	4TXC+S9V2C	UPFLOW	320 CFM	1990 CFM	1	1.00 hp	5 ton	56075 Btu/h	49201 Btu/h	79.5 °F	65.0 °F	56.4 °F	55.4 °F	100000 Btu/h	97000 Btu/h	1	2	NG	2.0 psi	60.0 °F	90.0 °F	96%	MERV 8	155 lb	13.9 A	15 A	120 V	1	
F-2	TRANE	4TXC+S9V2C	UPFLOW	320 CFM	1990 CFM	1	1.00 hp	5 ton	56075 Btu/h	49201 Btu/h	79.5 °F	65.0 °F	56.4 °F	55.4 °F	100000 Btu/h	97000 Btu/h	1	2	NG	2.0 psi	60.0 °F	90.0 °F	96%	MERV 8	155 lb	13.9 A	15 A	120 V	1	

AIR COOLED CONDENSING UNIT

ID	SERVES	REFERENCE PRODUCT	MODEL NO.	AUXILIARY FAN			COMPRESSOR							SUMMER AMBIENT DBT	WINTER AMBIENT DBT	SEER	WEIGHT	MCA	MOCP	VOLT	PH	REMARKS
				QTY	MOTOR		CAP	REFRIGERANT TYPE	UNLOADING STEPS	MOTOR		LOW AMBIENT KIT										
					QTY	POWER				QTY	RLA											
CU-1	F-1	TRANE	4TTV8060A100B	1	1	0.33 hp	5 ton	R-410A	1	1	19 A	Yes		90.0 °F	15.0 °F	18	258 lb	27 A	40 A	230 V	1	
CU-2	F-2	TRANE	4TTV8060A100B	1	1	0.33 hp	5 ton	R-410A	1	1	19 A	Yes		90.0 °F	15.0 °F	18	258 lb	27 A	40 A	230 V	1	

EXHAUST FAN SCHEDULE

Identity Mark	REFERENCE PRODUCT	MODEL NO.	CFM	OUTLET VELOCITY (OV) (FT/MIN)	T.S.P. (IN WG)	FAN TYPE	ARRANGEMENT	MAX. BHP	MOTOR				INLET SOUND POWER (MAX DB) PER OCTAVE BAND								WEIGHT (LBS.)	REMARKS
									HP	RPM	VOLT / PHASE	CYCLE	63HZ	125HZ	250HZ	500HZ	1000HZ	2000HZ	4000HZ	8000HZ		
EF-1	GREENHECK	SQ-90-VG	470	470	0.1	BACKWARD-INCLINE	IN-LINE	0.03	1/10	1725	208/1	60	65	65	61	55	51	51	45	38	43	INCLUDE BACKDRAFT DAMPER AND DISCONNECT.
EF-2	GREENHECK	SBE-3H30-3	4600	-	0.25	PROPELLER	SIDEWALL	0.38	1/3	1725	115/1	60	80	78	78	74	70	68	64	60	93	INCLUDE DISCONNECT.
EF-3	GREENHECK	SBE-1H20-4	320	-	0.25	PROPELLER	SIDEWALL	0.12	1/4	1725	115/1	60	76	67	55	57	62	57	59	58	55	INCLUDE DISCONNECT.
EF-4	BROAN	QTXEN110	86	-	0.25	CENTRIFUGAL	CEILING MOUNT	-	-	-	115/1	60	-	-	-	-	-	-	-	-	-	TO BE CONTROLLED BY OCCUPANCY SENSOR.
EF-5	BROAN	QTXEN110	86	-	0.25	CENTRIFUGAL	CEILING MOUNT	-	-	-	115/1	60	-	-	-	-	-	-	-	-	-	TO BE CONTROLLED BY OCCUPANCY SENSOR.
KHEF-1	GREENHECK	CUE-130-VG	1576	-	0.623	CENTRIFUGAL	UPBLAST/WALL MOUNT	.33	1/2	1450	115/1	60	76	75	83	72	64	63	59	57	85	INCLUDE DISCONNECT.

ELECTRIC UNIT HEATER SCHEDULE

ID	REFERENCE PRODUCT	MODEL NO.	FAN		HEATING COIL	HEATING ELEMENT	UNIT DIMENSIONS	UNIT WEIGHT	FLA	MCA	MOCP	VOLT	PH	REMARKS
			AIRFLOW		AIRSIDE		AFF							
			DESIGN	MIN	DELTA T	POWER	ELEVATION							
EUH-1	INDEECO	922U03000J	250 CFM	200 CFM	38.0 °F	3000 kW	1' - 0"	115 lb	0 A	14 A	0 A	240 V	1	

LOUVER SCHEDULE

ID	SERVES	REFERENCE PRODUCT	MODEL NO.	QTY	MATERIAL	FINISH	DESIGN AIRFLOW	FREE AREA	FREE AREA VELOCITY	PD	DAMPER TYPE	QTY	DIMENSIONS		UNIT WEIGHT	REMARKS
													WIDTH	HEIGHT		
L-1	KITCHEN OUTDOOR AIR INTAKE	GREENHECK	ESD-635	1	ALUMINUM	COLOR TO BE SELECTED BY ARCHITECT	1576 CFM	5.1 SF	350 FPM	0.02 in-wg	MOTORIZED	1	48"	30"	43 lb	
L-2	F-1	GREENHECK	ESD-635	1	ALUMINUM	COLOR TO BE SELECTED BY ARCHITECT	320 CFM	0.0 SF	350 FPM	0.00 in-wg	NA	1	16"	21"	9 lb	
L-3	F-2	GREENHECK	ESD-635	1	ALUMINUM	COLOR TO BE SELECTED BY ARCHITECT	320 CFM	0.0 SF	350 FPM	0.00 in-wg	NA	1	16"	21"	9 lb	
L-4	EF-1	GREENHECK	ESD-635	1	ALUMINUM	COLOR TO BE SELECTED BY ARCHITECT	470 CFM	5.1 SF	350 FPM	0.02 in-wg	NA	1	18"	18"	9 lb	

CEILING DIFFUSER SCHEDULE

ID	REFERENCE PRODUCT	MODEL NO.	NECK SIZE	FACE SIZE	MATERIAL	FINISH	MAX. CFM	MAX. NC	MAX. TOTAL PD (IN. WG.)	REMARKS
SD1/RD1	PRICE	SPD	6"Ø	24"X24"	STEEL	WHITE	135	15	0.032	
SD2/RD2	PRICE	SPD	8"Ø	24"X24"	STEEL	WHITE	250	15	0.057	
SD3/RD3	PRICE	SPD	10"Ø	24"X24"	STEEL	WHITE	380	18	0.088	
SD4/RD4	PRICE	SPD	12"Ø	24"X24"	STEEL	WHITE	550	21	0.127	
SD5/RD5	PRICE	SPD	14"Ø	24"X24"	STEEL	WHITE	750	23	0.173	
SD6/RD6	PRICE	SPD	6"Ø	12"X12"	STEEL	WHITE	135	16	0.116	
SD7/RD7	PRICE	SPD	8"Ø	12"X12"	STEEL	WHITE	250	22	0.208	

RETURN AND EXHAUST GRILLE SCHEDULE

TAG	REFERENCE PRODUCT	NOMINAL GRILLE SIZE (IN.)	MATERIAL	FINISH	MIN. CORE AREA (SQ. FT.)	MAX. CFM	MAX. NC	MAX. CORE VELOCITY (FPM)	MAX. VELOCITY PRESSURE (IN. WG.)	MAX. NEGATIVE S.P. (IN. WG.)	REMARKS
RG1, EG1	PRICE 60	8X8	STEEL	WHITE	0.39	150	24	400	0.01	0.127	45° DEFLECTION, 3/4" BLADE SPACING
RG2, EG2	PRICE 60	10X10	STEEL	WHITE	0.60	240	26	400	0.01	0.127	45° DEFLECTION, 3/4" BLADE SPACING
RG3, EG3	PRICE 60	12X12	STEEL	WHITE	0.90	350	29	400	0.01	0.127	45° DEFLECTION, 3/4" BLADE SPACING
RG4, EG4	PRICE 60	14X14	STEEL	WHITE	1.18	470	31	400	0.01	0.127	45° DEFLECTION, 3/4" BLADE SPACING
RG5, EG5	PRICE 60	16X16	STEEL	WHITE	1.80	640	33	400	0.01	0.127	45° DEFLECTION, 3/4" BLADE SPACING
RG6, EG6	PRICE 60	18X18	STEEL	WHITE	2.45	830	34	400	0.01	0.127	45° DEFLECTION, 3/4" BLADE SPACING
RG7, EG7	PRICE 60	24X24	STEEL	WHITE	3.61	1200	35	400	0.01	0.127	45° DEFLECTION, 3/4" BLADE SPACING
ECG3	PRICE 80	48X24	STEEL	WHITE	7.22	3600	15	500	0.016	0.034	EGGCRATE GRILLE WITH 1/2" X 1/2" X 1/2" ALUMINUM GRID CORE
ECG2	PRICE 80	24X24	STEEL	WHITE	3.61	1800	15	500	0.016	0.034	EGGCRATE GRILLE WITH 1/2" X 1/2" X 1/2" ALUMINUM GRID CORE
ECG1	PRICE 80	24X12	STEEL	WHITE	1.80	900	15	500	0.016	0.034	EGGCRATE GRILLE WITH 1/2" X 1/2" X 1/2" ALUMINUM GRID CORE

MISCELLANOUS EQUIPMENT SCHEDULE

MISC EQUIP TAG	MISC TOTAL REQ'D	MISC DESCRIPTION	MISC REMARKS
KEH-1	1	KITCHEN EXHAUST HOOD	REFERENCE GREENHECK GHEW 96"X48"X18"
MD-1	1	MOTORIZED DAMPER	TO BE SIZED AND FIT TO L-1, AS WELL AS OPEN WHEN KITCHEN GREASE EXHAUST HOOD BEGINS OPERATION, AND CLOSE WHEN STOPPING OPERATION.
IMCU-1	1	ICE MAKER CONDENSING UNIT	COORDINATE WITH GC AND OWNER FOR DETAILS.

MOXIFY
4334 NW EXPRESSWAY
SUITE 156
OKLAHOMA CITY, OK 73116
PHONE: (405) 254-5038
www.moxifyengineering.com
PROJECT: 501106
CA: 7612 EXP: 06/30/23

ARCHITECTS IN PARTNERSHIP

ARCHITECTS
INTERIOR DESIGNERS
PLANNERS

3220 MARSHALL AVENUE
NORMAN, OK 73072
TEL: 405.360.1300
FAX: 405.360.1431

SEAL:

LICENSED PROFESSIONAL ENGINEER
BRIAN E. ALLEN
330.37
OKLAHOMA
08/08/22

HENNESSEY FIRE DEPARTMENT

REMODEL/ADDITION

501 S. MAIN STREET

HENNESSEY, OKLAHOMA

REVISIONS

REV.	DATE	DESCRIPTION

PROJ. MANAGER: SAT
DRAWN BY: BEA
CHECKED BY: SAT

DATE: 08/08/2022
PROJECT NO.: 2111

SHEET TITLE: HVAC SCHEDULES

SHEET NO.: M-501

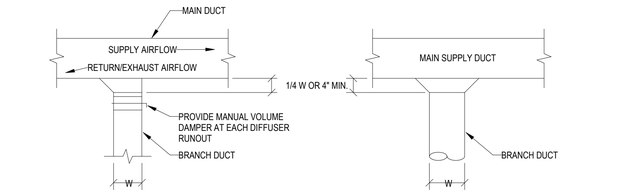

RECTANGULAR DUCT TAKEOFF FROM RECTANGULAR MAIN DUCT
MEDIUM & LOW PRESSURE - BEVELED TAP

ROUND DUCT TAKEOFF FROM RECTANGULAR MAIN DUCT
MEDIUM PRESSURE - CONICAL TAP

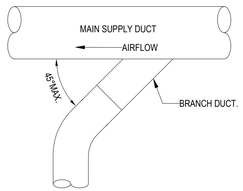

ROUND SUPPLY DUCT TAKEOFF FROM ROUND MAIN DUCT
MEDIUM PRESSURE - LATERAL TAP

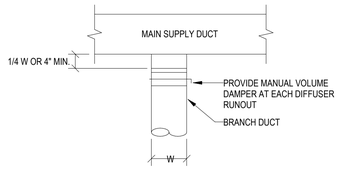

ROUND DUCT TAKEOFF FROM RECTANGULAR MAIN DUCT
LOW PRESSURE - SPIN TAP

1 M-601 BRANCH DUCT CONNECTION DETAILS
NOT TO SCALE

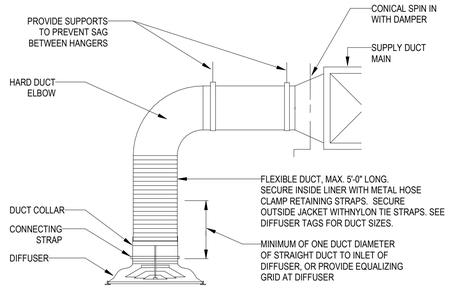

2 M-601 DIFFUSER FLEXIBLE DUCT CONNECTION
NOT TO SCALE

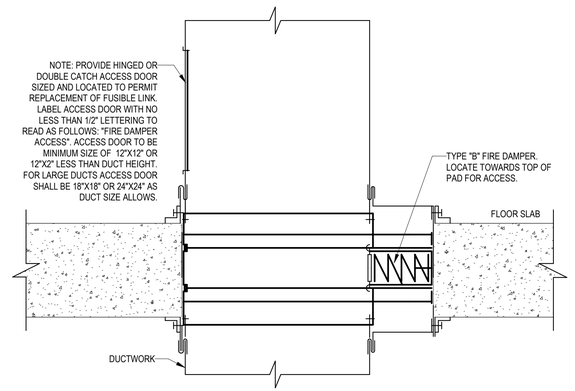

3 M-601 FIRE DAMPER AT FLOOR DETAIL
NOT TO SCALE

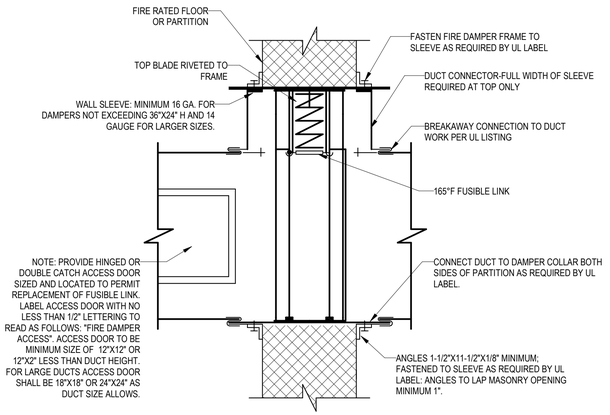

4 M-601 FIRE DAMPER INSTALLATION DETAIL
NOT TO SCALE

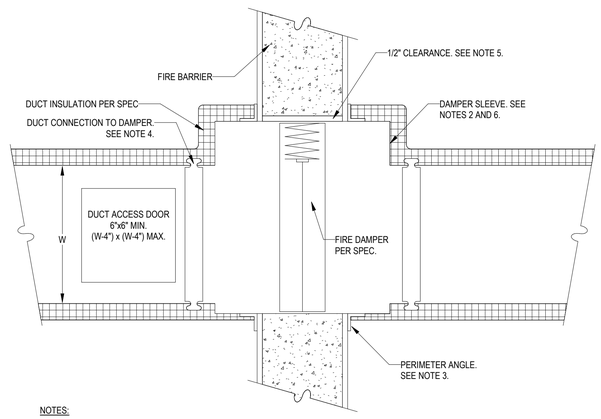

NOTES:

1. COMPLY WITH SMACNA "FIRE, SMOKE, AND RADIATION DAMPER INSTALLATION GUIDE FOR HVAC SYSTEMS" AND NFPA 90A "INSTALLATION OF AIR CONDITIONING AND VENTILATION SYSTEMS".
2. GALVANIZED SLEEVE'S GAUGE SHALL NOT BE LESS THAN THE CONNECTING DUCT GAUGE FOR BREAKAWAY CONNECTED DUCT. BREAKAWAY DUCT MAY BE OMITTED IF SLEEVE IS 16 GA. MIN.
3. GALVANIZED STELL PERIMETER ANGLE SHALL NOT BE LESS THAN 1-1/2" x 1-1/2" x 14GA. W/ MIN. 1" OVERLAP ON ALL SIDES.
4. BREAKAWAY DUCT CONNECTION. REFER TO SMACNA FIGURE 2-2 "UL ACCEPTED DUCT SLEEVE CONNECTIONS" OF FIRE, SMOKE, AND RADIATION DAMPER INSTALLATION GUIDE. UL TESTED DUCT SEALANT MAY BE USED. BREAKAWAY DUCT MAY BE OMITTED IF SLEEVE IS 16 GA. MIN.
5. PROVIDE 1/2" CLEARANCE ON HEIGHT AND WIDTH. FILL SPACE WITH FIRE STOPPING SEALANT.
6. FIRE DAMPER SLEEVE SHALL EXTEND 5" ON EACH SIDE.
7. LABEL ACCESS DOOR WITH NO LESS THAN 1/2" LETTERING TO READ AS FOLLOWS: "FIRE DAMPER ACCESS".

5 M-601 FIRE DAMPER DETAIL
NOT TO SCALE

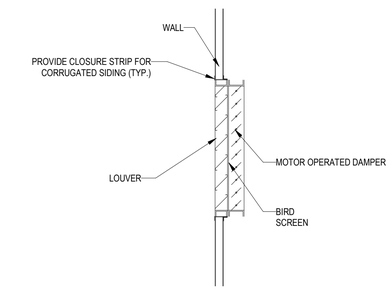

6 M-601 LOUVER DETAIL WITH DAMPER
NOT TO SCALE

MOXIFY
4334 NW EXPRESSWAY
SUITE 156
OKLAHOMA CITY, OK 73116
PHONE: (405) 254-5038
www.moxifyengineering.com
PROJECT: 501106
CA: 7612 EXP: 06/30/23

ARCHITECTS IN PARTNERSHIP
ARCHITECTS
INTERIOR DESIGNERS
PLANNERS
3220 MARSHALL AVENUE
NORMAN, OK 73072
TEL: 405.360.1300
FAX: 405.360.1431

SEAL:
LICENSED PROFESSIONAL ENGINEER
BRIAN E. ALLEN
33037
OKLAHOMA
08/08/22

HENNESSEY FIRE DEPARTMENT
REMODEL/ADDITION
HENNESSEY, OKLAHOMA
501 S. MAIN STREET

REVISIONS

REV.	DATE	DESCRIPTION

PROJ. MANAGER: SAT
DRAWN BY: BEA
CHECKED BY: SAT

DATE: 08/08/2022
PROJECT NO.: 2111

SHEET TITLE: HVAC DETAILS
SHEET NO.: M-601

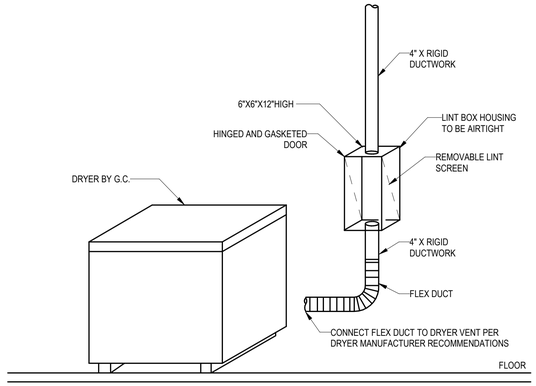

1 M-602 DRYER LINT BOX DETAIL
NOT TO SCALE

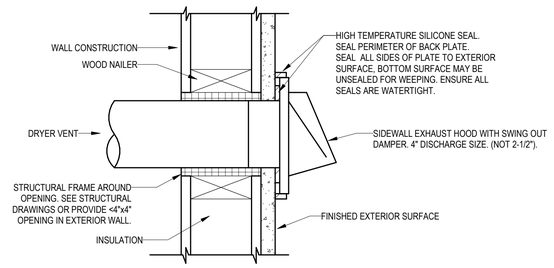

2 M-602 DRYER SIDEWALL VENT DETAIL
NOT TO SCALE

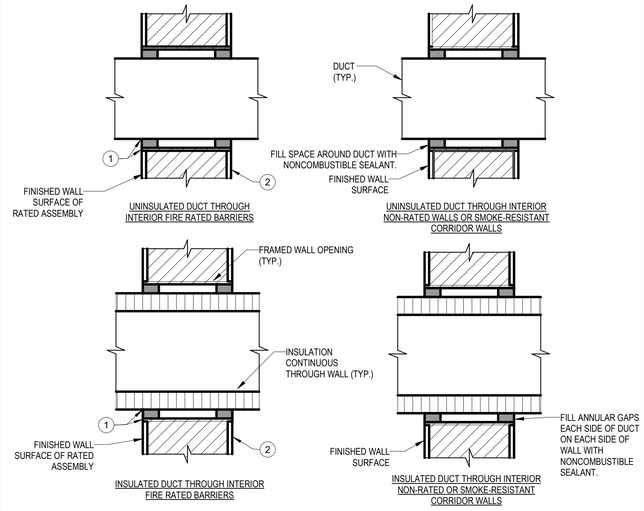

NOTES:

1. INSTALL FIRESTOP AND RETAINING ANGLES AS SPECIFIED IN DIVISION 7. ALL PENETRATIONS SHALL MEET UL LISTED RATING APPROPRIATE FOR WALL RATING.
2. INSTALL FIRESTOP LABEL ABOVE CEILING ON BOTH SIDES OF PENETRATION

3 M-602 DUCT PENETRATION DETAIL
NOT TO SCALE

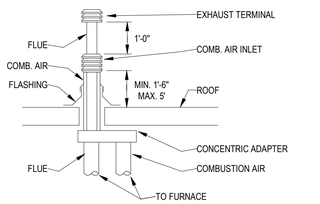

4 M-602 FURNACE FLUE DETAIL
NOT TO SCALE

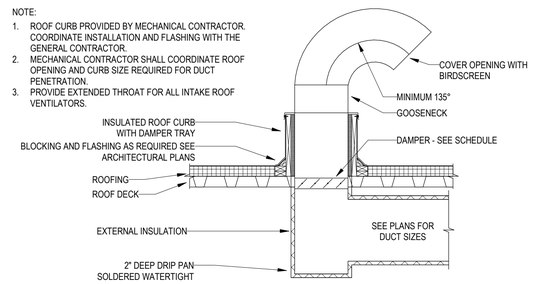

5 M-602 GOOSENECK DETAIL - INTAKE OR EXHAUST
NOT TO SCALE

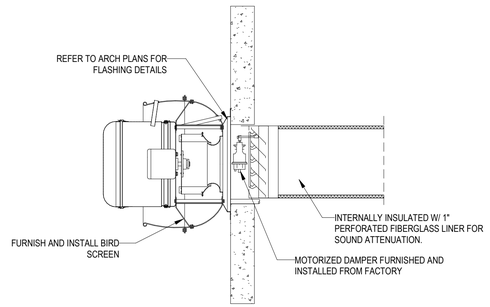

6 M-602 EXHAUST FAN SIDEWALL DETAIL
NOT TO SCALE

ARCHITECTS IN PARTNERSHIP

ARCHITECTS
INTERIOR DESIGNERS
PLANNERS

3220 MARSHALL AVENUE
NORMAN, OK 73072
TEL: 405.360.1300
FAX: 405.360.1431

SEAL:

LICENSED PROFESSIONAL ENGINEER
BRIAN E. ALLEN
33037
OKLAHOMA
08/08/22

HENNESSEY FIRE DEPARTMENT

REMODEL/ADDITION

501 S. MAIN STREET

HENNESSEY, OKLAHOMA

REVISIONS

REV.	DATE	DESCRIPTION

PROJ. MANAGER: SAT
DRAWN BY: BEA
CHECKED BY: SAT

DATE: 08/08/2022
PROJECT NO.: 2111

SHEET TITLE: HVAC DETAILS

SHEET NO.: M-602

MOXIFY

4334 NW EXPRESSWAY
SUITE 156
OKLAHOMA CITY, OK 73116
PHONE: (405) 254-5038
www.moxifyengineering.com
PROJECT: 501106
CA: 7612 EXP: 06/30/23

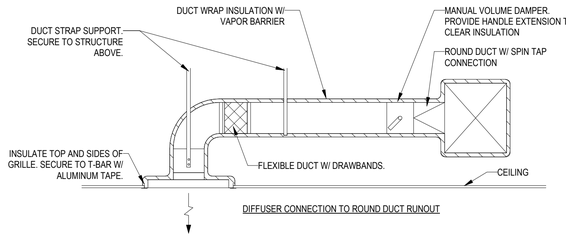

NOTES:

1. FLEXIBLE DUCT CONNECTIONS SHALL BE INSTALLED TO ADC STANDARDS AND SEALED TO UL STANDARDS PER AMC 603 AND 604.2.1.
2. CONTRACTOR SHALL SECURE THE FLEXIBLE DUCT TO ENDS OF METAL DUCT WITH DRAWBANDS AND WRAP 2" WIDE ALUMINUM TAPE EQUAL TO HARDCAST "FOIL GRIP" AROUND DRAWBAND AND EXPOSED END OF FLEXIBLE DUCT INSULATION.
3. FLEXIBLE DUCT LENGTH SHALL NOT EXCEED MAXIMUM LENGTH OF 5'-0".

1 M-603 SUPPLY DIFFUSER CONNECTION DETAILS
NOT TO SCALE

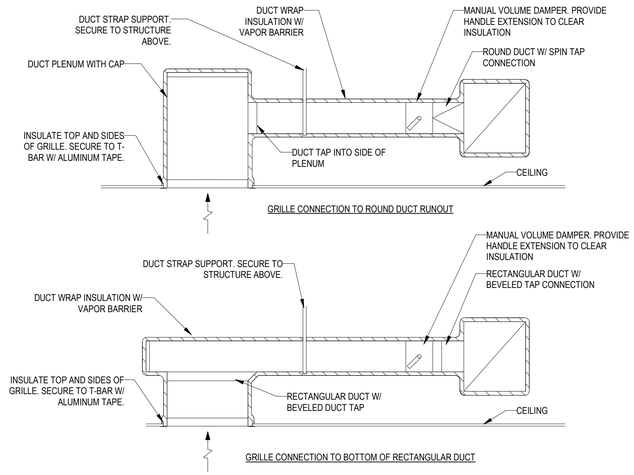

NOTES:

1. DUCTWORK SHALL BE INSULATED PER SPEC.

2 M-603 GRILLE CONNECTION RETURN/EXHAUST DETAILS
NOT TO SCALE

NOTE

PROVIDE MANUAL VOLUME DAMPER FOR EACH GRILLE AT TAKEOFF. DAMPER IN GRILLE IS NOT ACCEPTABLE.

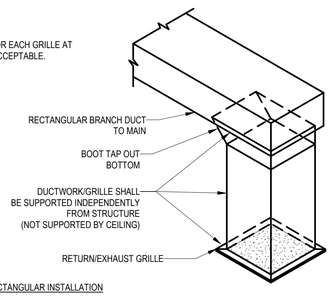

RECTANGULAR INSTALLATION

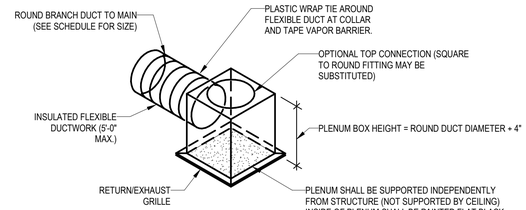

3 M-603 RETURN/EXHAUST GRILLE DETAIL
NOT TO SCALE

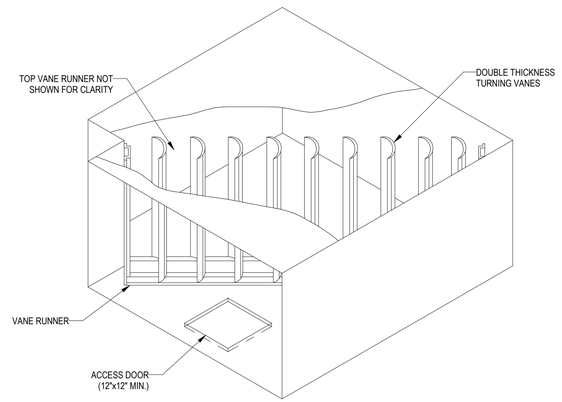

NOTES:

1. TURNING VANES SHALL BE USED WHERE RADIUS ELBOWS ARE NOT INDICATED ON SUPPLY AIR DUCTWORK ONLY.
2. TURNING VANE QUANTITY AND CONFIGURATION SHALL BE PER SMACNA STANDARDS.

4 M-603 TURNING VANE DETAIL
NOT TO SCALE

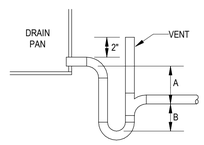

A= SCHEDULED FAN STATIC PLUS ONE INCH
B= 1/2 OF SCHEDULED FAN STATIC

5 M-603 COOLING COIL CONDENSATE DRAIN DETAIL
NOT TO SCALE

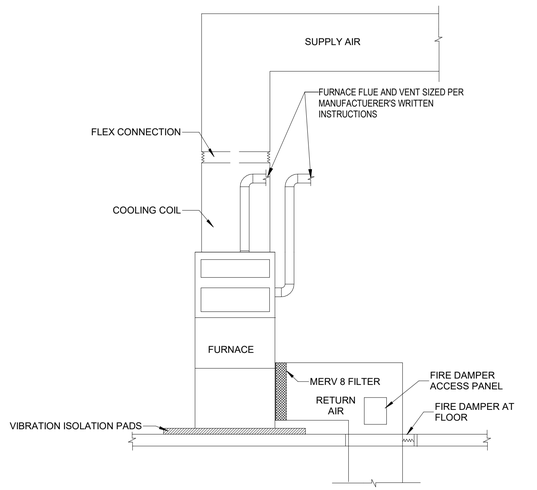

6 M-603 FURNACE DETAIL
NOT TO SCALE

MOXIFY
4334 NW EXPRESSWAY
SUITE 156
OKLAHOMA CITY, OK 73116
PHONE: (405) 254-5038
www.moxifyengineering.com
PROJECT: 501106
CA: 7612 EXP: 06/30/23

ARCHITECTS IN PARTNERSHIP
ARCHITECTS
INTERIOR DESIGNERS
PLANNERS
3220 MARSHALL AVENUE
NORMAN, OK 73072
TEL: 405.360.1300
FAX: 405.360.1431

SEAL:
LICENSED PROFESSIONAL ENGINEER
BRIAN E. ALLEN
33037
OKLAHOMA
08/08/22

HENNESSEY FIRE DEPARTMENT
REMODEL/ADDITION
501 S. MAIN STREET
HENNESSEY, OKLAHOMA

REVISIONS

REV.	DATE	DESCRIPTION

PROJ. MANAGER: SAT
DRAWN BY: BEA
CHECKED BY: SAT

DATE: 08/08/2022
PROJECT NO.: 2111

SHEET TITLE: HVAC DETAILS
SHEET NO.: M-603

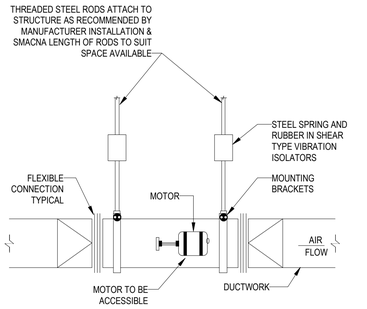

1 / M-604 IN-LINE FAN SUPPORT DETAIL
NOT TO SCALE

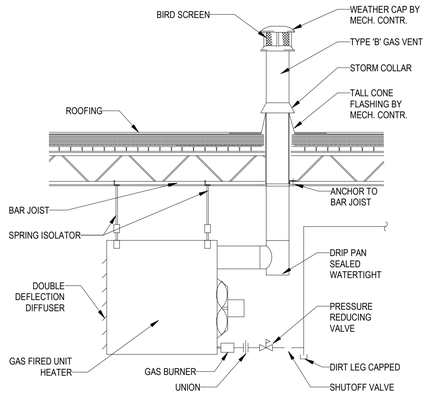

2 / M-604 GAS FIRED UNIT HEATER DETAIL
NOT TO SCALE

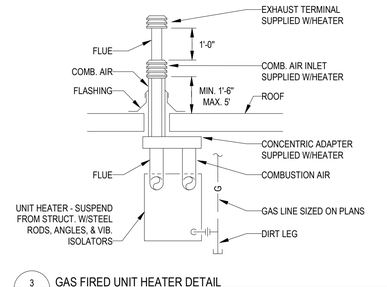

3 / M-604 GAS FIRED UNIT HEATER DETAIL
NOT TO SCALE

ARCHITECTS IN PARTNERSHIP

ARCHITECTS
INTERIOR DESIGNERS
PLANNERS

3220 MARSHALL AVENUE
NORMAN, OK 73072
TEL: 405.360.1300
FAX: 405.360.1431

SEAL:

LICENSED PROFESSIONAL ENGINEER
BRIAN E. ALLEN
33037
OKLAHOMA
08/08/22

HENNESSEY FIRE DEPARTMENT

REMODEL/ADDITION

501 S. MAIN STREET

HENNESSEY, OKLAHOMA

REVISIONS

REV.	DATE	DESCRIPTION

PROJ. MANAGER:	SAT
DRAWN BY:	BEA
CHECKED BY:	SAT
DATE:	08/08/2022
PROJECT NO.:	2111
SHEET TITLE:	HVAC DETAILS
SHEET NO.:	M-604

MOXIFY

4334 NW EXPRESSWAY
SUITE 156
OKLAHOMA CITY, OK 73116
PHONE: (405) 254-5038
www.moxifyengineering.com
PROJECT: 501106
CA: 7612 EXP: 06/30/23

ELECTRICAL ABBREVIATIONS LIST

1P	1 POLE (2P, 3P, 4P, ETC.)
A	AMPERE
AC	ABOVE COUNTER
ACLG	ABOVE CEILING
ADO	AUTOMATIC DOOR OPENER
AF	AMP FRAME
AFF	ABOVE FINISHED FLOOR
AFG	ABOVE FINISHED GRADE
AFI	ARC FAULT CIRCUIT INTERRUPTER
AHU	AIR HANDLING UNIT
AL	ALUMINUM
ALT	ALTERNATE
AMP	AMPERE
AMPL	AMPLIFIER
ANNUN	ANNUNCIATOR
ARCH	ARCHITECT, ARCHITECTURAL
AS	AMP SWITCH
AT	AMP TRIP
ATS	AUTOMATIC TRANSFER SWITCH
AUTO	AUTOMATIC
AUX	AUXILIARY
AV	AUDIO VISUAL
AWG	AMERICAN WIRE GAUGE
BATT	BATTERY
BLDG	BUILDING
BMS	BUILDING MANAGEMENT SYSTEM
C	CONDUIT
CATV	CABLE TELEVISION
CB	CIRCUIT BREAKER
CCTV	CLOSED CIRCUIT TELEVISION
CCT	CIRCUIT
CLG	CEILING
COMB	COMBINATION
CMPR	COMPRESSOR
CONT	CONTINUATION OR CONTINUOUS
CP	CIRCULATING PUMP
CT	CURRENT TRANSFORMER
CTR	CENTER
CU	COPPER
DCP	DOMESTIC WATER CIRCULATING PUMP
DEPT	DEPARTMENT
DET	DETAIL
DIA	DIAMETER
DISC	DISCONNECT
DIST	DISTRIBUTION
DN	DOWN
DS	SAFETY DISCONNECT SWITCH
DT	DOUBLE THROW
DWG	DRAWING
EC	ELECTRICAL CONTRACTOR
ELEC	ELECTRIC, ELECTRICAL
ELEV	ELEVATOR
EM	EMERGENCY
EMGB	EQUIPMENT MAIN GROUNDING BUSBAR
EMS	ENERGY MANAGEMENT SYSTEM
EMT	ELECTRICAL METALLIC TUBING
EQUIP	EQUIPMENT
EWC	ELECTRIC WATER COOLER
EXIST	EXISTING
EXH	EXHAUST
EXP	EXPLOSION PROOF
FA	FIRE ALARM
FABP	FIRE ALARM BOOSTER POWER SUPPLY PANEL
FACP	FIRE ALARM CONTROL PANEL
FCU	FAN COIL UNIT
FLR	FLOOR
FU	FUSE
GA	GAUGE
GAL	GALLON
GALV	GALVANIZED
GC	GENERAL CONTRACTOR
GEN	GENERATOR
GFI	GROUND FAULT CIRCUIT INTERRUPTER
GFP	GROUND FAULT PROTECTOR
GND	GROUND
GRS	GALVANIZED RIGID STEEL (CONDUIT)
GYP	GYPSUM BOARD
HOA	HAND-OFF-AUTOMATIC SWITCH
HORIZ	HORIZONTAL
HP	HORSEPOWER
HT	HEIGHT
HTG	HEATING
HTR	HEATER
HV	HIGH VOLTAGE
HVAC	HEATING, VENTILATING AND AIR CONDITIONING
IC	INTERRUPTING CAPACITY
IG	ISOLATED GROUND
IMC	INTERMEDIATE METAL CONDUIT
IR	INFRARED
I/W	INTERLOCK WITH
J-BOX	JUNCTION BOX
KV	KILOVOLT
KVA	KILOVOLT-AMPERE
KVAR	KILOVOLT-AMPERE REACTIVE
KW	KILOWATT
KWH	KILOWATT HOUR
LTG	LIGHTING
LTNG	LIGHTNING
LV	LOW VOLTAGE
MAX	MAXIMUM
M/C	MOMENTARY CONTACT
MC	MECHANICAL CONTRACTOR
MCB	MAIN CIRCUIT BREAKER
MCC	MOTOR CONTROL CENTER
MDC	MAIN DISTRIBUTION CENTER
MDP	MAIN DISTRIBUTION PANEL
MFR	MANUFACTURER
MH	MANHOLE
MIC	MICROPHONE
MIN	MINIMUM
MISC	MISCELLANEOUS
MLO	MAIN LUGS ONLY
MOA	MULTIOUTLET ASSEMBLY
MSBD	MAIN SWITCHBOARD
MT	MOUNT
MTS	MANUAL TRANSFER SWITCH
MTR	MOTOR, MOTORIZED
N.C.	NORMALLY CLOSED
NEC	NATIONAL ELECTRICAL CODE
NEMA	NATIONAL ELECTRICAL MANUFACTURER'S ASSOCIATION
NIC	NOT IN CONTRACT
NL	NIGHT LIGHT
N.O.	NORMALLY OPEN
NTS	NOT TO SCALE
OH	OVERHEAD
OL	OVERLOADS
PA	PUBLIC ADDRESS
PB	PULL BOX OR PUSHBUTTON
PF	POWER FACTOR
PH	PHASE
PIV	POST INDICATING VALVE
PNL	PANEL
PP	POWER POLE
PR	PAIR
PRI	PRIMARY
PT	POTENTIAL TRANSFORMER
PVC	POLYVINYL CHLORIDE (CONDUIT)
PWR	POWER
QTY	QUANTITY
RCPT	RECEPTACLE
REQD	REQUIRED
RM	ROOM
RSC	RIGID STEEL CONDUIT
RTU	ROOF TOP UNIT
SEC	SECONDARY
SHT	SHEET
SIM	SIMILAR
SPD	SURGE PROTECTIVE DEVICE
SPEC	SPECIFICATION
SPKR	SPEAKER
SP	SPARE
SS	STAINLESS STEEL
S/S	STOP/START PUSHBUTTONS
STD	STANDARD
SW	SWITCH
SWBD	SWITCHBOARD
SYM	SYMMETRICAL
SYS	SYSTEM
TEL	TELEPHONE
TEL/DATA	TELEPHONE/DATA
TERM	TERMINAL
TGB	TELECOMMUNICATIONS GROUNDING BUSBAR
TL	TWIST LOCK
TR	TAMPER RESISTANT
T-STAT	THERMOSTAT
TV	TELEVISION
TYP	TYPICAL
UC	UNDER COUNTER
UE	UNDERGROUND ELECTRICAL
UG	UNDERGROUND
UH	UNIT HEATER
UNO	UNLESS NOTED OTHERWISE
UT	UNDERGROUND TELEPHONE
UTIL	UTILITY
UV	ULTRAVIOLET
V	VOLT
VA	VOLT-AMPERES
VERT	VERTICAL
VFD	VARIABLE FREQUENCY DRIVE
VOL	VOLUME
W	WATT
W/	WITH
WAP	WIRELESS ACCESS POINT
WG	WIRE GUARD
WH	WATER HEATER
W/O	WITHOUT
WP	WEATHERPROOF
XFMR	TRANSFORMER
XFR	TRANSFER

∠	ANGLE
@	AT
▲	DELTA
'	FEET
"	INCHES
#	NUMBER
Ø	PHASE
C	CENTER LINE
P	PLATE

ELECTRICAL SYMBOLS

MOUNTING HEIGHT	SYMBOL	DESCRIPTION
		2' X 4' RECESSED LIGHT
		LINEAR RECESSED LIGHT
		LINEAR PENDANT LIGHT
		2' X 2' RECESSED LIGHT (DESIGNATES (EM) LIFE SAFETY FIXTURE)
	HB	HIGH BAY LIGHT
		STRIP LIGHT
		ROUND RECESSED LIGHT
		ROUND RECESSED LIGHT (WALL WASH)
		ROUND SURFACE LIGHT
		ROUND PENDANT LIGHT
		CEILING EXIT LIGHT
90"		EXIT SIGN
		(DESIGNATES # OF HEADS)
84"		EMERGENCY BATTERY LIGHT
84"		EMERGENCY LIGHT (DOUBLE REMOTE HEADS)
84"		EMERGENCY LIGHT (SINGLE REMOTE HEAD)
48"	S	SINGLE POLE SWITCH
48"	S2	2 POLE SINGLE THROW SWITCH
48"	S3	3-WAY SWITCH
48"	S4	4-WAY SWITCH
48"	SK	KEYED SWITCH
48"	S	SWITCH W/PILOT
48"	SD	DIMMER SWITCH
48"	OS	OCCUPANCY SENSOR SWITCH
48"	SMC	MOMENTARY CONTACT SWITCH
48"	ST	TIMER SWITCH
48"	STD	TIME DELAY SWITCH
48"	TC	TIME CONTROL SWITCH
48"	PC	PHOTOCELL
	P	POWER POLE (OPEN OFFICE STYLE)
		SURGERY SERVICE COLUMN
		STATIC GROUND RECEPTACLE
		LIGHTNING PROTECTION AIR TERMINAL
		LIGHTNING PROTECTION COND. SPLICE
		GROUND ROD
	P	UTILITY SERVICE POWER POLE
18"		SINGLE RECEPT.
18"		DUPLEX RECEPT.
48"		(DESIGNATES SPECIFIC MOUNTING HEIGHT)
18"	GFI	GFI DUPLEX RECEPT.
18"	GFI WP	GFI WEATHERPROOF RECEPT.
18"		SPLIT DUPLEX RECEPT.
18"		DUPLEX ISOLATED GROUND RECEPT.
18"		DUPLEX RECEPT. ON EMERG. CIRCUIT
		FLOOR DUPLEX RECEPT.
	CLNG	CEILING DUPLEX RECEPT.
18"		QUADRUPLEX RECEPT.
18"		QUADRUPLEX RECEPT. ON EMERG. CIRCUIT
18"		240V RECEPTACLE
		RECEPT. ON CORD REEL
18"		SPECIAL RECEPT.
18"	J	JUNCTION BOX
	FJ	FLOOR JUNCTION BOX
	CJ CLNG	CEILING JUNCTION BOX
		MULTIOUTLET ASSEMBLY
	PS - D2	
	XX-1	MOTOR
	XX-1	IDENTITY (SEE SCHEDULE)

EXISTING TO REMAIN	RELOCATED	DEMOLISHED
XX-1	XX-1	XX-1
(E)XX-1	(R)XX-1	(D)XX-1

	COMB. MOTOR STARTER (FUSED)
M	MANUAL MOTOR STARTER
	SAFETY DISC. SW. (NON-FUSED)
	SAFETY DISC. SW. (FUSED)
R	RELAY
	PUSH BUTTON
60" T	THERMOSTAT
60" H	HUMIDISTAT
T1	TRANSFORMER
	BUS DUCT W/ PLUG IN DISCONNECT CABLE TAP BOX

MOUNTING HEIGHT	SYMBOL	DESCRIPTION
18"		TELEPHONE OUTLET
		FLOOR TELEPHONE OUTLET
18"	1V2D	VOICE/DATA OUTLET
		# OF VOICE AND # OF DATA OUTLETS. FOR EXAMPLE 1V2D = 1 VOICE, 2 DATA
		FLOOR DATA OUTLET
	CLNG	CEILING DATA OUTLET
18"		CATV OUTLET
84"	TV	TV OUTLET
84"		WALL SPEAKER
	S	CEILING SPEAKER
90"	S	HORN TYPE SPEAKER
84"	C	CLOCK
48"	F P	FIRE ALARM PULL STATION
90"	F	FIRE ALARM HORN W/STROBE (CANDELAS)
90"	F	FIRE ALARM BELL
90"	F	FIRE ALARM BELL W/STROBE (CANDELAS)
90"	F	FIRE ALARM CHIME W/STROBE (CANDELAS)
78"		FIRE ALARM DOOR HOLDER
78"		FIRE ALARM DOOR CLOSER
60"	FR	FIRE ALARM SHUT DOWN RELAY
	T	THERMAL DETECTOR
	S	DUCT SMOKE DETECTOR
	2	CEILING SMOKE DETECTOR
		SPRINKLER FLOW SWITCH
		SPRINKLER VALVE TAMPER SWITCH
		SPRINKLER LEVEL SWITCH
		SPRINKLER PRESSURE SWITCH
		SPRINKLER TEMPERATURE SWITCH
90"		DOOR BELL
90"		DOOR BUZZER
90"		DOOR CHIME
60"	D	DOOR SIGNAL
48"	ES	ELECTRIC STRIKE
48"	ML	MAGNETIC LOCK
48"	CL	COMBINATION LOCK
84"	DC	DOOR CONTACT
48"	CR	CARD READER
48"		SECURITY KEYPAD
90"	MD	MOTION DETECTOR
48"		NURSE CALL EMERG. STATION
48"		NURSE CALL CODE BLUE STATION
48"		NURSE CALL DUTY STATION
48"	S	NURSE CALL STAFF STATION
48"	P2	NURSE CALL PATIENT STATION
48"	P2	NURSE CALL DUAL PATIENT STATION
90"	N1	NURSE CALL DOME LIGHT
90"	N2	
90"	N3	NUMBER INDICATES QUANTITY OF LIGHTS
		LIGHTNING PROTECTION CONDUCTOR
		BOND OR CONNECTION
		GROUND ROD
		DOWN CONDUCTOR

ELECTRICAL SYMBOL NOTES

D3 / 1d — THE LIGHTING FIXTURE TYPE IS INDICATED BY AN UPPER CASE LETTER. THE CIRCUIT DESIGNATION IS INDICATED BY A NUMBER. THE SWITCH DESIGNATION IS INDICATED BY A LOWER CASE LETTER.

EXAMPLE 1: LIGHTING FIXTURE TYPE "A" IS CONNECTED TO CIRCUIT 12 AND CONTROLLED BY SWITCH "b".

D6D/1 / 2e — EXAMPLE 2: THE FIXTURE TYPE SHOWN AS A NUMERATOR INDICATES ALL LIGHTING FIXTURES IN THE ROOM OR SPACE ARE THE SAME TYPE. THE CIRCUIT NUMBER AND SWITCH DESIGNATION SHOWN AS A DENOMINATOR INDICATES ALL LIGHTING FIXTURES IN THE ROOM OR SPACE ARE CONNECTED TO THE SAME CIRCUIT, CONTROLLED BY THE SAME SWITCHES, CENTER/OUTBOARD MULTILEVEL SWITCHING.

E1 / 1 — EXIT LIGHTS: STEM INDICATES WALL MOUNTING. NO STEM INDICATES CEILING MOUNTING. SHADED AREA INDICATES ILLUMINATED FACE(S). ARROW INDICATES DIRECTIONAL ARROW ON ILLUMINATED FACE(S). THE CIRCUIT DESIGNATION IS INDICATED BY A NUMBER. EXAMPLE: THE WALL MOUNTED EXIT LIGHT TYPE "E1" WITH SINGLE FACE AND DIRECTIONAL ARROW IS CONNECTED TO CIRCUIT 1.

<unnamed>d — DEVICES: THE CIRCUIT DESIGNATION IS INDICATED BY A NUMBER. THE SWITCH DESIGNATION IS INDICATED BY A LOWER CASE LETTER. EXAMPLE: SPLIT DUPLEX RECEPTACLE IS CONNECTED TO CIRCUIT 1 AND ONE RECEPTACLE OUTLET IS CONTROLLED BY SWITCH "d".

d — THE CONTROL DEVICE DESIGNATION IS INDICATED BY A LOWER CASE LETTER. EXAMPLE: SINGLE POLE SWITCH "d" TO CONTROL LIGHTING FIXTURES INDICATED BY "d".

D / e — WALL BOX DIMMER WITH SIZE AS INDICATED AT DEVICE. EXAMPLE: WALL BOX DIMMER TO CONTROL LIGHTING FIXTURES INDICATED BY "e". SEE SPECIFICATIONS FOR WATTAGE IF NOT INDICATED.

<unnamed> — SPECIAL CONNECTIONS: THE EQUIPMENT IS INDICATED BY A NUMBER IN A CIRCLE. SEE THE MOTOR AND EQUIPMENT SCHEDULE FOR THE LOAD DESCRIPTION AND TYPE OF CONNECTION. THE CIRCUIT DESIGNATION IS INDICATED BY NUMBER(S) ADJACENT TO THE SYMBOL.

PANELBOARDS. PANELBOARD DOORS MAY BE SHOWN TO INDICATE OPENING SIDE OF RECESSED PANELBOARDS. SEE PANELBOARD IDENTIFICATION FOR DESIGNATION CODES.

FLOOR CLEARANCE AREA

XX-1 — MOTOR CONNECTIONS: THE MOTOR IS INDICATED BY A NUMBER WITHIN OR CHARACTERS ADJACENT TO THE MOTOR SYMBOL. SEE THE MOTOR AND EQUIPMENT SCHEDULE FOR THE MOTOR DESCRIPTION AND ELECTRICAL REQUIREMENTS.

T1 — TRANSFORMERS: THE TRANSFORMER TYPE IS INDICATED BY A NUMBER FOLLOWING THE UPPER CASE LETTER "T". SEE THE TRANSFORMER SCHEDULE OR THE SINGLE LINE DIAGRAM FOR THE TRANSFORMER DESCRIPTION AND REQUIREMENTS. EXAMPLE: TRANSFORMER TYPE "T1".

CONDUIT IN CEILING, FLOOR, OR WALL AS REQUIRED BY FIELD CONDITIONS

CONDUIT IN FLOOR

#12 — CONDUIT SHOWN WITHOUT SLASH MARKS SHALL CONTAIN 2 # 12 PHASE/ NEUTRAL CONDUCTORS AND 1 #12 GROUND IN 3/4" CONDUIT UNLESS SPECIFIC EQUIPMENT REQUIRES A DIFFERENT SIZE.

#10 — CONDUIT SHOWN SHALL CONTAIN 1 # 10 CONDUCTOR PER PHASE AND 1 #10 GROUND IN 3/4" CONDUIT UNLESS A CONDUCTOR AND CONDUIT SIZE IS SHOWN ADJACENT.

LP4N-102 / 1, 3, 5 — HOME RUN TO BRANCH CIRCUIT PANELBOARD. THE PANELBOARD DESIGNATION IS SHOWN ADJACENT TO THE HOME RUN ARROW AS A NUMERATOR AND THE CIRCUIT DESIGNATION IS SHOWN AS THE DENOMINATOR. CIRCUIT BREAKER SIZES (AMPS/NUMBER OF POLES) ARE SHOWN IN THE PANELBOARD SCHEDULE WITH THE CORRESPONDING PANELBOARD AND CIRCUIT DESIGNATION. EXAMPLE: HOME RUN TO PANELBOARD LP4N-102; CIRCUITS 1, 3, 5.

GRAPHICAL REPRESENTATION OF PHASING, TYPICAL FOR ALL SYMBOLS.

- EXISTING TO REMAIN (GRAY)
- EXISTING TO BE REMOVED (DASHED)
- NEW (BLACK)
- ITEM TO BE REMOVED
- AREA NOT IN CONTRACT
- REVISION NUMBER - SHOWN ON PLANS
- NUMBER OF DETAIL ON SHEET / NUMBER OF SHEET WHERE DETAIL APPEARS
- 1 — KEYED NOTE (SEE SCHEDULE)
- ROOM ### — ROOM NAME AND NUMBER

GENERAL ELECTRICAL NOTES

A. ALL CONDUCTORS OPERATING AT 50 VOLTS OR GREATER SHALL BE IN RACEWAY. ALL RACEWAY WITHIN THE STRUCTURE AND FLOOR SLAB SHALL BE METAL. UNDERGROUND RACEWAY OUTSIDE THE STRUCTURE SHALL BE PVC.

B. ALL LOW VOLTAGE CABLES OR CONDUCTORS OPERATING AT LESS THAN 50 VOLTS SHALL BE IN METAL RACEWAY WHERE INSTALLED WITHIN WALLS OR INACCESSIBLE SPACES. LOW VOLTAGE CABLES MAY BE RUN IN CABLE TRAY WHERE NOTED. LOW VOLTAGE CABLES MAY BE RUN IN CABLE SUPPORT HOOKS ABOVE ACCESSIBLE CEILINGS WHERE NOTED.

C. COORDINATE LOCATIONS OF DEVICES WITH ARCHITECTURAL ELEVATIONS AND DETAILS. ARCHITECTURAL ELEVATIONS AND DETAILS TAKE PRECEDENCE OVER LOCATIONS SHOWN ON ELECTRICAL DRAWINGS. SEE ARCHITECTURAL ELEVATIONS FOR LOCATIONS OF ELECTRICAL DEVICES AT PATIENT BED HEADWALLS.

D. VERIFY LOCATIONS AND ROUGH-IN REQUIREMENTS OF ALL OWNER FURNISHED EQUIPMENT PRIOR TO ROUGH-IN.

E. CONDUIT AND WIRE SHALL NOT BE INSTALLED BELOW FLOOR SLAB UNLESS INDICATED ON PLAN BY DASHED CONDUIT.

F. CONTRACTOR SHALL BE RESPONSIBLE FOR WIRING ALL ELECTRICAL ITEMS SHOWN ON DRAWINGS EXCEPT FOR ITEMS LISTED IN NOTE G.

G. TV OUTLETS, VOLUME CONTROLS, TELEPHONE OUTLETS, DATA OUTLETS, AND FIRE ALARM DEVICES SHALL CONSIST OF A BACK BOX WITH CONDUIT STUBBED ABOVE THE ACCESSIBLE CEILING. SEE STUB UP DETAIL. VERIFY SIZE OF BACK BOX REQUIRED WITH DEVICE TO BE INSTALLED. LOCATE BACK BOXES 6" FROM ADJACENT POWER RECEPTACLE INTENDED FOR COMPUTER USE.

H. FURNISH AND INSTALL CONDUIT FROM BACK BOXES FOR THE FOLLOWING DEVICES INTO THE ACCESSIBLE CEILING SPACE IN THE CORRIDOR, UNLESS NOTED OTHERWISE:

3/4"C	TV OUTLETS
3/4"C	VOLUME CONTROLS
3/4"C	TELEPHONE OUTLETS
3/4"C	INFORMATION OUTLETS
3/4"C	FIRE ALARM DEVICES

I. PROVIDE FIRE ALARM DEVICES AND CONTROL PANELS AS REQUIRED FOR A FULLY FUNCTIONAL FIRE ALARM SYSTEM. SUBMIT SHOP DRAWINGS SHOWING LOCATIONS AND QUANTITIES OF ALL DEVICES.

SPECIFIC CODE NOTES

FIRE PROTECTION REQUIREMENTS

A. PENETRATIONS IN WALLS REQUIRING PROTECTED OPENINGS MUST BE FIRESTOPPED WITH AN APPROVED MATERIAL.

1. CONDUITS MAY PENETRATE WALLS OR PARTITIONS, PROVIDED THEY ARE FIRE-STOPPED.
2. OPENINGS FOR STEEL ELECTRICAL BOXES NOT EXCEEDING 16 SQUARE INCHES ARE PERMITTED PROVIDED OPENINGS DO NOT AGGREGATE MORE THAN 100 SQUARE INCHES FOR ANY 100 SQUARE FEET OF WALL OR PARTITION.
3. OUTLET BOXES ON OPPOSITE SIDES OF WALLS OR PARTITIONS MUST BE SEPARATED BY A HORIZONTAL DISTANCE OF 24 INCHES.

B. LIGHT FIXTURES AND OTHER APPARATUS SUPPORTED BY THE ACOUSTICAL CEILING GRID MUST MEET THE REQUIREMENTS OF NEC SECTION 410.16, MEANS OF SUPPORT.

C. RECESSED LIGHTING FIXTURES INSTALLED IN FIRE RATED CEILING ASSEMBLIES SHALL BE FIRE RATED FIXTURES BEARING THE UL FIRE RATED LABEL. FIXTURES SHALL BE INSTALLED IN ACCORDANCE WITH THE UL FIRE RESISTANCE DIRECTORY, AND SHALL INCLUDE A FIRE RATED ENCLOSURE INSTALLED OVER THE FIXTURE THAT MEETS THE REQUIREMENTS OF THE UL FIRE RESISTANCE DIRECTORY.

ELECTRICAL SHEET INDEX

E-001	ELECTRICAL GENERAL
E-111	FIRST FLOOR ELECTRICAL DEMOLITION PLAN
EL-211	LIGHTING PLAN
EP-211	POWER PLAN
E-501	ELECTRICAL SCHEDULES
E-601	ELECTRICAL DETAILS

* NOTE *
ALL OF GENERAL NOTES ON THIS SHEET ARE TO BE APPLIED TO ALL OTHER DRAWINGS IN THIS SET.THE SYMBOLS AND ABBREVIATIONS SHOWN ON THIS SHEET MAY OR MAY NOT BE USED IN THIS SET OF DRAWINGS.

ARCHITECTS IN PARTNERSHIP

ARCHITECTS
INTERIOR DESIGNERS
PLANNERS

3220 MARSHALL AVENUE
NORMAN, OK 73072
TEL: 405.360.1300
FAX: 405.360.1431

SEAL: LICENSED PROFESSIONAL ENGINEER — DAVID ISAAC WATERS 25178 — OKLAHOMA — 05/05/22

HENNESSEY FIRE DEPARTMENT
REMODEL/ADDITION
HENNESSEY, OKLAHOMA
501 S. MAIN STREET

REVISIONS

REV.	DATE	DESCRIPTION

PROJ. MANAGER: SAT
DRAWN BY: DIW
CHECKED BY: DIW

DATE: 08/08/2022
PROJECT NO.: 2111

SHEET TITLE: ELECTRICAL GENERAL

SHEET NO.: E-001

MOXIFY
4334 NW EXPRESSWAY
SUITE 156
OKLAHOMA CITY, OK 73116
PHONE: (405) 254-5038
www.moxifyengineering.com
PROJECT: 501106
CA: 7612 EXP: 06/30/23

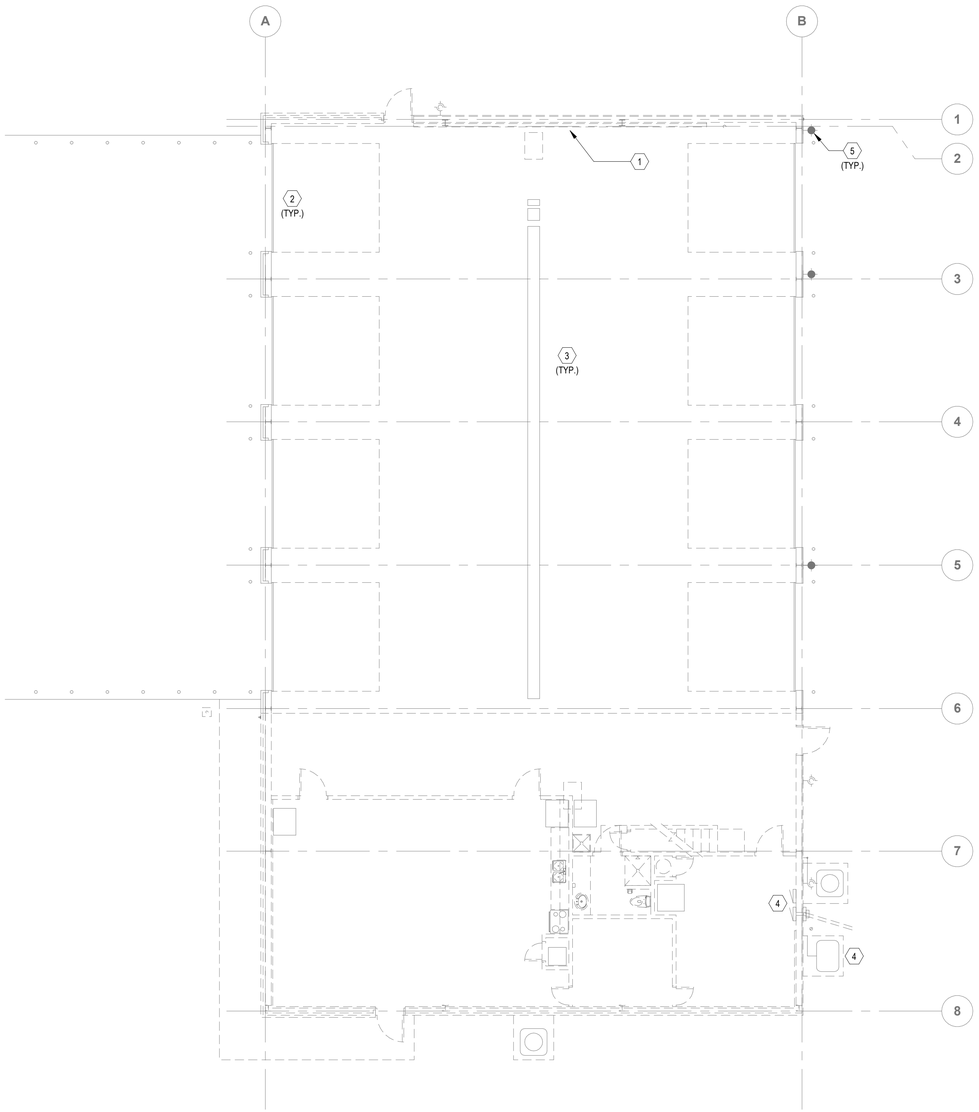

1 E-111 FIRST FLOOR ELECTRICAL DEMOLITION PLAN
1/8" = 1'-0"
0 4' 8' 16'

PROJECT NORTH

DEMOLITION GENERAL NOTES

A SEE ARCHITECTURAL DRAWINGS AND SPECIFICATIONS FOR PHASES OF DEMOLITION AND CONSTRUCTION. COORDINATE WITH GENERAL CONSTRUCTION.

B DISCONNECT AND REMOVE ALL ELECTRICAL DEVICES AND LIGHTING FIXTURES IN AREAS BEING DEMOLISHED UNLESS NOTED OTHERWISE.

C DISCONNECT AND REMOVE ALL ELECTRICAL DEVICES IN WALLS TO BE DEMOLISHED. WALLS TO BE DEMOLISHED ARE SHOWN DASHED. DISCONNECT AND REMOVE ASSOCIATED CONDUIT AND WIRE BACK TO LAST REMAINING DEVICE. FURNISH AND INSTALL CONDUIT AND WIRE AS NECESSARY FOR CONTINUITY OF CIRCUIT(S) TO ANY EXISTING DEVICES TO REMAIN. COORDINATE AND VERIFY REQUIREMENTS WITH NEW WORK IN AREA.

D FURNISH AND INSTALL CONDUIT AND WIRE AS NECESSARY FOR CONTINUITY OF ANY FEEDERS OR BRANCH CIRCUITS ORIGINATING OUTSIDE THE DEMOLITION AREA THAT SERVES ANY ELECTRICAL EQUIPMENT OR DEVICES TO REMAIN AFTER DEMOLITION. MODIFY OR REPLACE AS REQUIRED.

E FURNISH AND INSTALL CONDUIT AND/OR COMMUNICATIONS/DATA WIRING AS NECESSARY FOR CONTINUITY OF ANY WIRING ORIGINATING OUTSIDE THE DEMOLITION AREA THAT SERVES ANY COMMUNICATIONS/DATA EQUIPMENT OR DEVICES TO REMAIN AFTER DEMOLITION. MODIFY OR REPLACE AS REQUIRED.

F DISCONNECT AND REMOVE LIGHT SWITCHES IN DEMOLITION AREAS AS NECESSARY TO ACCOMMODATE NEW DOOR CONFIGURATIONS.

G DISCONNECT AND REMOVE ANY EXISTING ELECTRICAL DEVICES AND BACK BOXES AS NECESSARY WHERE NEW WALL CONSTRUCTION WILL INTERSECT AN EXISTING WALL. FURNISH AND INSTALL CONDUIT AND WIRE AS REQUIRED FOR CONTINUITY OF CIRCUIT(S).

H PROVIDE NEMA 3R SERVICE ENTRANCE PANELBOARD FOR TEMPORARY POWER TO FACILITY DURING CONSTRUCTION.

KEYNOTES

1 DEMOLISH EXISTING RECEPTACLES ALONG WALL.

2 MAINTAIN POWER TO OVERHEAD DOORS THROUGH DEMOLITION AND CONSTRUCTION.

3 RETAIN POWER TO LIGHTING AND RECEPTACLES THROUGHOUT TRUCK BAY AREA.

4 EXISTING PANELBOARDS, GENERATOR, AND TRANSFER SWITCH TO BE REMOVED. COORDINATE REQUIRED OUTAGE WITH UTILITY.

5 EXISTING EXTERIOR LIGHT TO REMAIN.

MOXIFY
4334 NW EXPRESSWAY
SUITE 156
OKLAHOMA CITY, OK 73116
PHONE: (405) 254-5038
www.moxifyengineering.com
PROJECT: 501106
CA: 7612 EXP: 06/30/23

ARCHITECTS IN PARTNERSHIP

ARCHITECTS
INTERIOR DESIGNERS
PLANNERS

3220 MARSHALL AVENUE
NORMAN, OK 73072
TEL: 405.360.1300
FAX: 405.360.1431

SEAL:
LICENSED PROFESSIONAL ENGINEER
DAVID ISAAC WATERS 25178
OKLAHOMA
08/08/22

HENNESSEY FIRE DEPARTMENT
REMODEL/ADDITION
501 S. MAIN STREET
HENNESSEY, OKLAHOMA

REVISIONS

REV.	DATE	DESCRIPTION

PROJ. MANAGER: SAT
DRAWN BY: DIW
CHECKED BY: DIW

DATE: 08/08/2022
PROJECT NO.: 2111

SHEET TITLE: FIRST FLOOR ELECTRICAL DEMOLITION PLAN
SHEET NO.: E-111

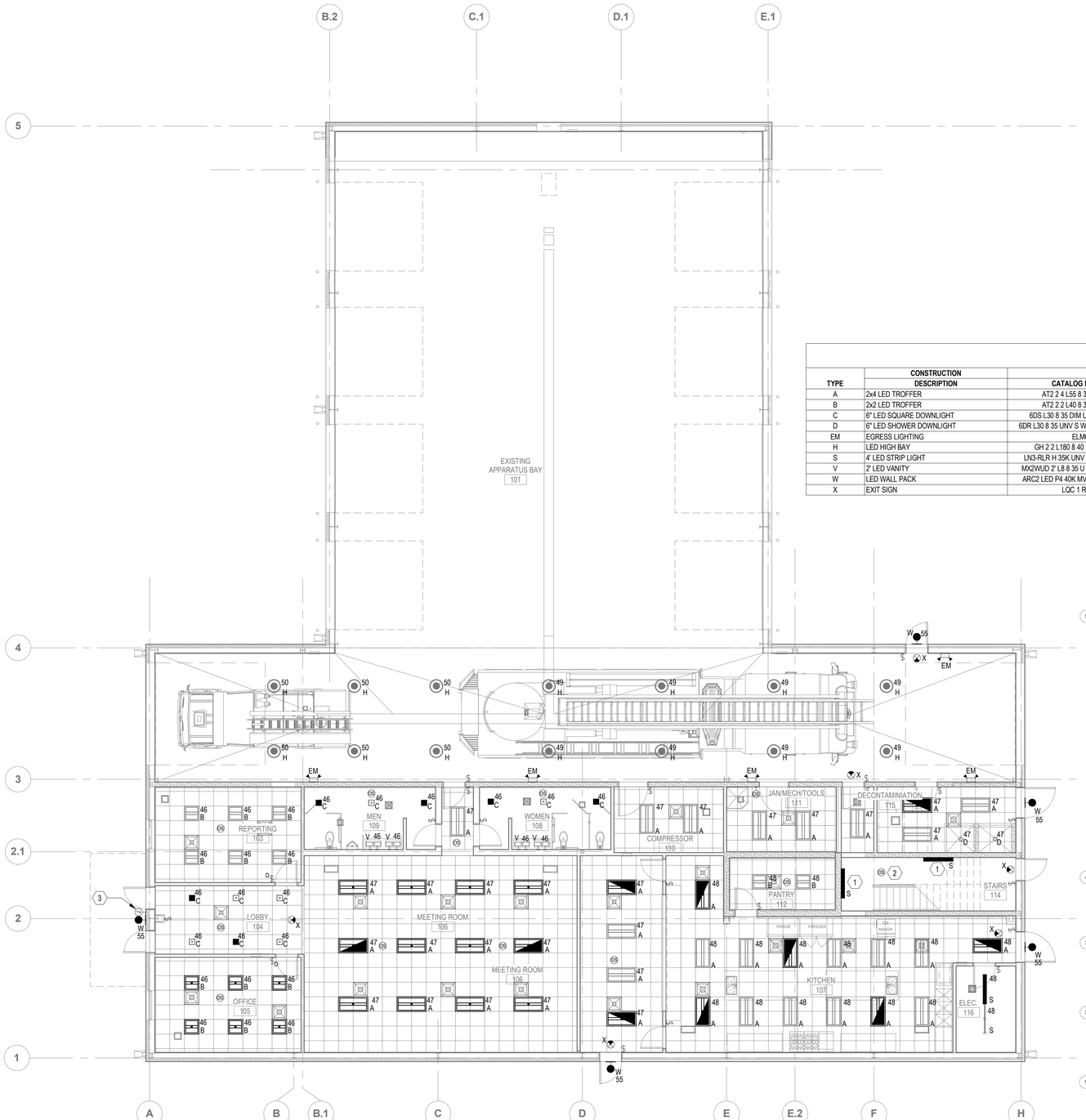

1 EL-211 FIRST FLOOR LIGHTING PLAN
1/8" = 1'-0"
0 4' 8' 16'
PROJECT NORTH

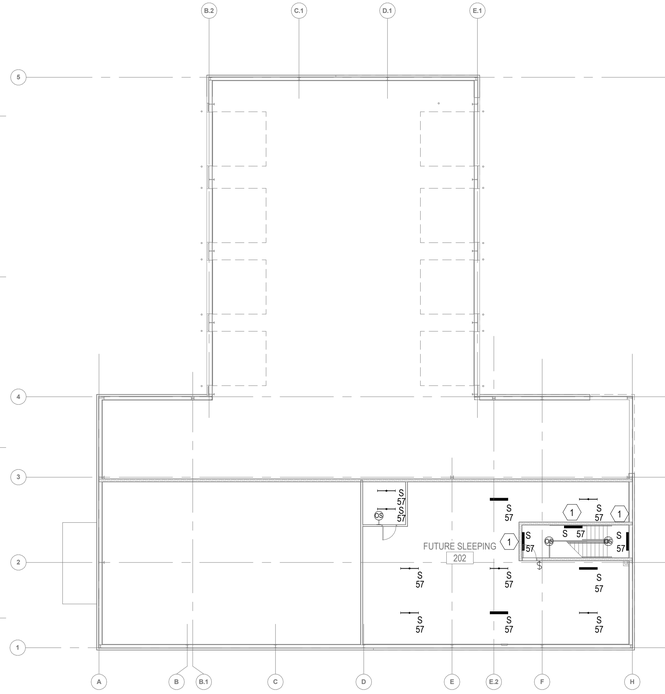

2 EL-211 SECOND FLOOR LIGHTING PLAN
1/16" = 1'-0"
0 8' 16' 32'
PROJECT NORTH

LIGHTING GENERAL NOTES

A ALL RECESSED LIGHTING FIXTURES IN LAY-IN CEILINGS SHALL BE INSTALLED WITH 6' LONG FLEXIBLE METAL CONDUIT.
B ALL MOUNTING HEIGHTS FOR LIGHTING FIXTURES ARE TO THE BOTTOM OF THE FIXTURES UNLESS INDICATED OTHERWISE.
C SEE ARCHITECTURAL EXTERIOR ELEVATIONS FOR MOUNTING HEIGHTS OF EXTERIOR LIGHTING FIXTURES.
D REFER TO SECTION 26 0519 FOR MINIMUM CONDUCTOR SIZE ADJUSTMENTS FOR VOLTAGE DROP.
E PROVIDE PROPER NUMBER OF CONDUCTORS TO ACHIEVE CIRCUITING AND SWITCHING SHOWN.
F CIRCUIT NUMBERS AT DEVICES CORRESPOND TO PANELBOARD BREAKERS (SEE PANELBOARD SCHEDULE). BRANCH CIRCUITS SHALL BE SIZED ACCORDING TO THE CIRCUIT BREAKER RATING, UNLESS INDICATED OTHERWISE ON THE ELECTRICAL EQUIPMENT SCHEDULE.
G POWER EXIT SIGNS AND TYPE "EM" FIXTURES FROM ADJACENT LIGHTING CIRCUIT IN SAME SPACE.
H SWITCHES AND SENSORS CONTROL THE AREAS IN WHICH THEY ARE LOCATED UNLESS OTHERWISE NOTED.

KEYNOTES

1 SURFACE MOUNT TYPE "S" FIXTURE AT 9' AFF.
2 AFTER 30 MINUTES OF VACANCY, DIM FIXTURES IN STAIRS 114 TO 50% LIGHT OUTPUT.
3 PROVIDE JUNCTION BOX FOR FUTURE SIGNAGE. REFER TO ARCHITECTURAL DRAWINGS FOR DIMENSIONED LOCATION.

LIGHTING FIXTURE SCHEDULE

TYPE	CONSTRUCTION DESCRIPTION	PRODUCT CATALOG NUMBER	PRODUCT MFR	CONSTRUCTION MOUNTING	LIGHT SOURCE LUMENS	LIGHT SOURCE CCT	LIGHT SOURCE CRI	ELECTRICAL VOLT	ELECTRICAL WATTS	NOTE
A	2x4 LED TROFFER	AT2 2 4 L55 8 35 D DIM 120	HE WILLIAMS	LAY-IN	5500 lm	3500 K	80	120 V	48 W	PROVIDE 90 MINUTES OF BATTERY BACKUP FOR SHADED FIXTURES.
B	2x2 LED TROFFER	AT2 2 2 L40 8 35 D DIM 120	HE WILLIAMS	LAY-IN	4000 lm	3500 K	80	120 V	38 W	
C	6" LED SQUARE DOWNLIGHT	6DS L30 8 35 DIM UNV R W OF CS I	HE WILLIAMS	RECESSED	3000 lm	3500 K	80	120 V	31 W	
D	6" LED SHOWER DOWNLIGHT	6DR L30 8 35 UNV S W OF CS WET/CC AM	HE WILLIAMS	RECESSED	3000 lm	3500 K	80	120 V	12 W	PROVIDE 90 MINUTES OF BATTERY BACKUP FOR SHADED FIXTURES.
EM	EGRESS LIGHTING	ELM6L	LITHONIA	WALL	1100 lm	5000 K	80	120 V	12 W	MOUNT AT 10' AFF.
H	LED HIGH BAY	GH 2 2 L180 8 40 HA FP DIM 120	HE WILLIAMS	SUSPENDED	18000 lm	4000 K	80	120 V	126 W	
S	4' LED STRIP LIGHT	LN3-RLR H 35K UNV SM/SK36 AEB W 4	PRIMUS	SURFACE/SUSPENDED	4900 lm	3500 K	80	120 V	36 W	PROVIDE 90 MINUTES OF BATTERY BACKUP FOR SHADED FIXTURES.
V	2' LED VANITY	MX2WUD 2' L8 8 35 U / L8 8 35 D F F 120	HE WILLIAMS	SURFACE	3200 lm	3500 K	80	120 V	14 W	
W	LED WALL PACK	ARC2 LED P4 40K MVOLT E8WC DBLXD	LITHONIA	WALL	4000 lm	4000 K	80	120 V	24 W	PROVIDE 90 MINUTES OF COLD WEATHER BATTERY BACKUP.
X	EXIT SIGN	LQC 1 R EL N	LITHONIA	UNIVERSAL				120 V	5 W	PROVIDE 90 MINUTES OF BATTERY BACKUP.

MOXIFY
4334 NW EXPRESSWAY
SUITE 156
OKLAHOMA CITY, OK 73116
PHONE: (405) 254-5038
www.moxifyengineering.com
PROJECT: 501106
CA: 7612 EXP: 06/30/23

ARCHITECTS IN PARTNERSHIP
ARCHITECTS
INTERIOR DESIGNERS
PLANNERS
3220 MARSHALL AVENUE
NORMAN, OK 73072
TEL: 405.360.1300
FAX: 405.360.1431

SEAL:
LICENSED PROFESSIONAL ENGINEER
DAVID ISAAC WATERS
25178
OKLAHOMA
08/05/22

HENNESSEY FIRE DEPARTMENT
REMODEL/ADDITION
501 S. MAIN STREET
HENNESSEY, OKLAHOMA

REVISIONS

REV.	DATE	DESCRIPTION

PROJ. MANAGER: SAT
DRAWN BY: DIW
CHECKED BY: DIW

DATE: 08/08/2022
PROJECT NO.: 2111

SHEET TITLE: LIGHTING PLAN
SHEET NO.: EL-211

POWER GENERAL NOTES

A WHERE CONNECTED TO A 20A. BRANCH CIRCUIT SUPPLYING AN INDIVIDUAL RECEPTACLE (SIMPLEX OR DUPLEX), THE RECEPTACLE SHALL BE RATED AT 20A.

B PROVIDE HOUSEKEEPING PADS FOR ALL FLOOR MOUNTED AND GRADE MOUNTED ELECTRICAL EQUIPMENT. MINIMUM REQUIREMENTS: 4" HIGH, 4% AIR ENTRAINED, POLYFIBER REINFORCED CONCRETE, 4" WIDER AND 4" LONGER THAN EQUIPMENT TO BE PLACED ON IT. REFER TO ELECTRICAL DETAIL DRAWINGS FOR TRANSFORMER, GENERATOR, OR SWITCHGEAR PADS THAT MAY EXCEED THESE REQUIREMENTS.

C REFER TO SECTION 26 0519 FOR MINIMUM CONDUCTOR SIZE ADJUSTMENTS FOR VOLTAGE DROP.

D CIRCUIT WIRING IS NOT SHOWN EXCEPT FOR SWITCHING INTENT OF FIXTURES AND CONTROL OF DEVICES.

E PROVIDE PROPER NUMBER OF CONDUCTORS TO ACHIEVE CIRCUITING AND SWITCHING SHOWN.

F CIRCUIT NUMBERS AT DEVICES CORRESPOND TO PANELBOARD BREAKERS (SEE PANELBOARD SCHEDULE). BRANCH CIRCUITS SHALL BE SIZED ACCORDING TO THE CIRCUIT BREAKER RATING, UNLESS INDICATED OTHERWISE ON THE ELECTRICAL EQUIPMENT SCHEDULE.

G ALL RECEPTACLES IN KITCHEN SHALL HAVE GFI PROTECTION. DEVICES THAT ARE NOT READILY ACCESSIBLE SHALL BE PROTECTED BY GFI BREAKER.

H RECONNECT ALL REMAINING EXISTING LOADS TO PANEL LP. PROVIDE COMPLETE PANEL SCHEDULE WITH ALL LOADS ACCURATELY LABELED.

KEYNOTES

1 PROVIDE POWER AND CONTROLS FOR NEW OVERHEAD DOOR. PROVIDE INTERCONNECTING WIRING AS REQUIRED.

2 REFER TO ARCHITECTURAL PLANS FOR RECEPTACLE LOCATIONS WITHIN MILLWORK.

3 COORDINATE EXACT LOCATION OF GEENRATOR AND TRANSFORMER WITH CIVIL, SITE, UTILITY, AND ALL OTHER TRADES.

4 PROVIDE JUNCTION BOX FOR FUTURE DOORBELL. REFER TO ARCHITECTURAL DRAWINGS FOR DIMENSIONED LOCATION.

EQUIPMENT CONNECTION SCHEDULE

TAG	CIRCUIT	INPUTS APPARENT LOAD	MOCP	VOLTAGE	CONDUIT & WIRE SIZE	NOTE
(E) UH	34	0 VA	0 A	120 V		
COMPRESSOR	31,33	1200 VA	20 A	240 V	(2) #12, (1) #12 GROUND IN 3/4" CONDUIT	
CU-1	20,22	5184 VA	45 A	240 V	(2) #6, (1) #10 GROUND IN 1" CONDUIT	
CU-2	24,26	5184 VA	45 A	240 V	(2) #6, (1) #10 GROUND IN 1" CONDUIT	
EF-1	21	500 VA	15 A	120 V	(2) #12, (1) #12 GROUND IN 3/4" CONDUIT	
EF-2	25	900 VA	15 A	120 V	(2) #12, (1) #12 GROUND IN 3/4" CONDUIT	
EF-3	23	700 VA	15 A	120 V	(2) #12, (1) #12 GROUND IN 3/4" CONDUIT	
EF-4	59	500 VA	20 A	120 V	(2) #12, (1) #12 GROUND IN 3/4" CONDUIT	
EF-5	59	500 VA	20 A	120 V	(2) #12, (1) #12 GROUND IN 3/4" CONDUIT	
EUH-1	30,32	3840 VA	20 A	240 V	(2) #12, (1) #12 GROUND IN 3/4" CONDUIT	
F-1	27	1334 VA	15 A	120 V	(2) #12, (1) #12 GROUND IN 3/4" CONDUIT	
F-2	29	1334 VA	15 A	120 V	(2) #12, (1) #12 GROUND IN 3/4" CONDUIT	
IMCU-1	51,53	5184 VA	45 A	240 V	(2) #6, (1) #10 GROUND IN 1" CONDUIT	
KHEF-1	28	1656 VA	15 A	120 V	(2) #12, (1) #12 GROUND IN 3/4" CONDUIT	
RCP-1	65	500 VA	20 A	120 V	(2) #12, (1) #12 GROUND IN 3/4" CONDUIT	
WH-1	61	500 VA	20 A	120 V	(2) #12, (1) #12 GROUND IN 3/4" CONDUIT	

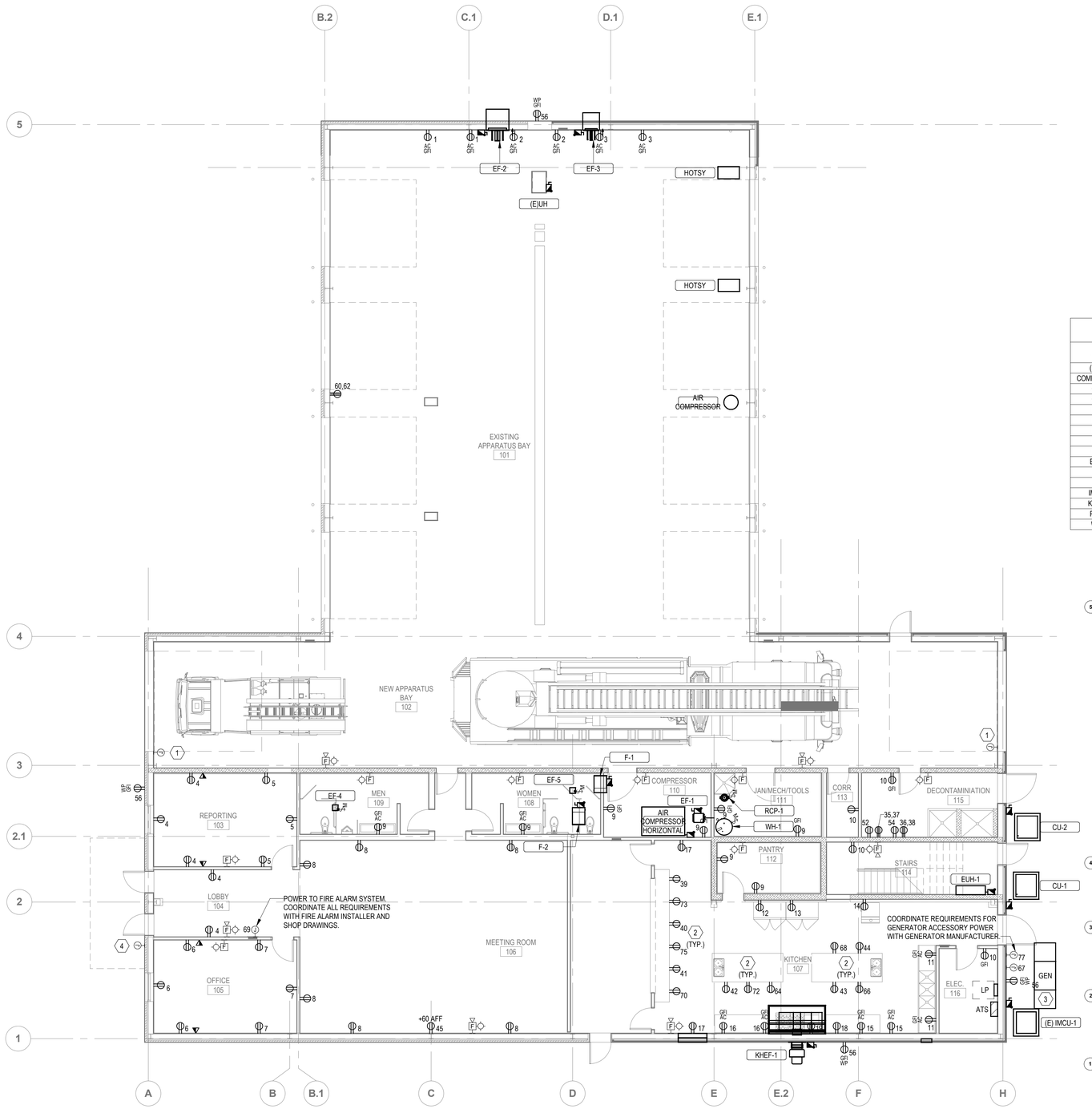

1 EP-211 FIRST FLOOR POWER PLAN
1/8" = 1'-0"
0 8' 16' 24'
PROJECT NORTH

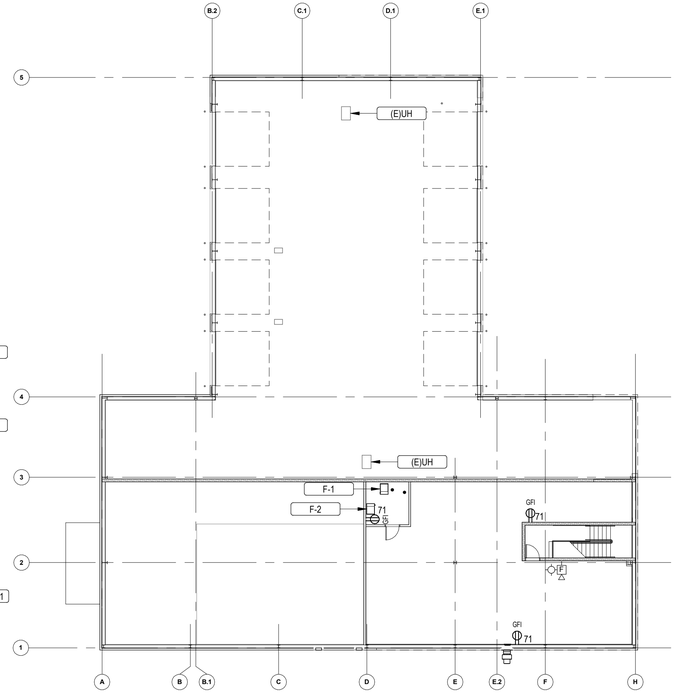

2 EP-211 SECOND FLOOR POWER PLAN
1/16" = 1'-0"
0 8' 16' 32'
PROJECT NORTH

MOXIFY
4334 NW EXPRESSWAY
SUITE 156
OKLAHOMA CITY, OK 73116
PHONE: (405) 254-5038
www.moxifyengineering.com
PROJECT: 501106
CA: 7612 EXP: 06/30/23

ARCHITECTS IN PARTNERSHIP

ARCHITECTS
INTERIOR DESIGNERS
PLANNERS

3220 MARSHALL AVENUE
NORMAN, OK 73072
TEL: 405.360.1300
FAX: 405.360.1431

SEAL:
LICENSED PROFESSIONAL ENGINEER
DAVID ISAAC WATERS
25178
OKLAHOMA
08/05/22

HENNESSEY FIRE DEPARTMENT
REMODEL/ADDITION
501 S. MAIN STREET
HENNESSEY, OKLAHOMA

REVISIONS		
REV.	DATE	DESCRIPTION

PROJ. MANAGER:	SAT
DRAWN BY:	DIW
CHECKED BY:	DIW
DATE:	08/08/2022
PROJECT NO.:	2111
SHEET TITLE:	POWER PLAN
SHEET NO.:	EP-211

Branch Panel: LP

Location: ELEC. 116
Supply From:
Mounting: SURFACE
Enclosure: NEMA 1

Volts: 120/240
Phases: 1
Wires: 3

A.I.C. Rating: PER POWER SYSTEM STUDIES
Mains Type: MAIN CB
Mains Rating: 400 A
MCB Rating: 400 A

Notes:
PROVIDE INTEGRAL SURGE PROTECTION. PROVIDE 100% RATED MAIN CIRCUIT BREAKER.

CKT	Circuit Description	Trip	Poles	A		B		Poles	Trip	Circuit Description	CKT
1	RCPT - NORTH WALL	20 A	1	360 VA	360 VA			1	20 A	RCPT - NORTH WALL	2
3	RCPT - NORTH WALL	20 A	1			360 VA	900 VA	1	20 A	RCPT REPORTING 103	4
5	RCPT REPORTING 103	20 A	1	540 VA	540 VA			1	20 A	RCPT OFFICE 105	6
7	RCPT OFFICE 105	20 A	1			540 VA	1080 VA	1	20 A	RCPT MEETING ROOM 106	8
9	RCPT Room 108, 110, 112, 111, 109	20 A	1	1440 VA	1080 VA			1	20 A	RCPT 219, 115, 114, 116, EXTERIOR	10
11	RCPT KITCHEN 107 - EAST	20 A	1			360 VA	1000 VA	1	20 A	RCPT KITCHEN - REFRIGERATOR (NOTE 1)	12
13	RCPT KITCHEN - FREEZER (NOTE 1)	20 A	1	1000 VA	180 VA			1	20 A	RCPT KITCHEN - ICE MAKER (NOTE 1)	14
15	RCPT - KITCHEN 107 - SOUTH	20 A	1			360 VA	360 VA	1	20 A	RCPT - KITCHEN 107 - SOUTH	16
17	RCPT KITCHEN 107	20 A	1	360 VA	180 VA			1	20 A	RCPT - KITCHEN 107 - SOUTH	18
19	RCPT - KITCHEN 107 - SOUTH	20 A	1			180 VA	2592 VA	2	45 A	CU-1	20
21	EF-1	15 A	1	500 VA	2592 VA						22
23	EF-3	15 A	1			700 VA	2592 VA	2	45 A	CU-2	24
25	EF-2	15 A	1	900 VA	2592 VA						26
27	F-1	15 A	1			1334 VA	1656 VA	1	20 A	KHEF-1	28
29	F-2	15 A	1	1334 VA	1920 VA			2	20 A	EUH-1	30
31	AIR COMPRESSOR	20 A	2			600 VA	1920 VA				32
33				600 VA	0 VA			1	20 A	SPEC Space 214	34
35	DECON. DRYER	20 A	2			1200 VA	1200 VA	2	20 A	DECON. DRYER	36
37				1200 VA	1200 VA						38
39	RCPT KITCHEN 107	20 A	1			1450 VA	1450 VA	1	20 A	RCPT KITCHEN 107	40
41	RCPT KITCHEN 107	20 A	1	1450 VA	1450 VA			1	20 A	ISLAND RECEPTACLES	42
43	ISLAND RECEPTACLES	20 A	1			1450 VA	1450 VA	1	20 A	ISLAND RECEPTACLES	44
45	TV MEETING ROOM 106	20 A	1	180 VA	884 VA			1	20 A	LIGHTING - 103-105, 108, 109	46
47	LIGHTING - 106, 110, 115	20 A	1			1224 VA	820 VA	1	20 A	LIGHTING - KITCHEN, PANTRY, ELEC	48
49	HIGH BAY LIGHTING	20 A	1	1008 VA	756 VA			1	20 A	HIGH BAY LIGHTING	50
51	IMCU-1	45 A	2			2592 VA	180 VA	1	20 A	RCPT DECON. 115	52
53				2592 VA	180 VA			1	20 A	RCPT DECON. 115	54
55	EXTERIOR LIGHTING	20 A	1			133 VA					56
57	LITES FUTURE SLEEPING 215	20 A	1	478 VA							58
59	EF-4, EF-5	20 A	1			1000 VA	600 VA	2	20 A	AIR COMPRESSOR	60
61	WH-1	20 A	1	500 VA	600 VA						62
63							1450 VA	1	20 A	RCPT KITCHEN 107	64
65	RCP-1	20 A	1	500 VA	1450 VA			1	20 A	RCPT KITCHEN 107	66
67	GENERATOR ACCESSORIES	20 A	1			500 VA	1450 VA	1	20 A	RCPT KITCHEN 107	68
69	FACP - PROVIDE RED LOCK-ON BREAKER	20 A	1	500 VA	1450 VA			1	20 A	RCPT KITCHEN 107	70
71	SECOND FLOOR RECEPTACLES	20 A	1			540 VA	1450 VA	1	20 A	RCPT KITCHEN 107	72
73	RCPT KITCHEN 107	20 A	1	1450 VA	0 VA			1	20 A	SPARE	74
75	RCPT KITCHEN 107	20 A	1			1450 VA	0 VA	1	20 A	SPARE	76
77	GENERATOR ACCESSORIES	20 A	1	500 VA	0 VA			1	20 A	SPARE	78
79	SPARE	20 A	1			0 VA	0 VA	1	20 A	SPARE	80
81	SPARE	20 A	1	0 VA	0 VA			1	20 A	SPARE	82
83	SPARE	20 A	1			0 VA	0 VA	1	20 A	SPARE	84
			Total Load:	34796 VA		38110 VA					
			Total Amps:	290 A		318 A					

Legend:

Load Classification	Connected Load	Demand Factor	Estimated Demand	Panel Totals	
HVAC	23976 VA	100.00%	23976 VA		
RCPT	37110 VA	63.47%	23555 VA	**Total Conn. Load:**	72906 VA
LITES	5283 VA	125.00%	6603 VA	**Total Est. Demand:**	60671 VA
SPEC	2700 VA	100.00%	2700 VA	**Total Conn.:**	304 A
HEAT	3840 VA	100.00%	3840 VA	**Total Est. Demand:**	253 A

Notes:

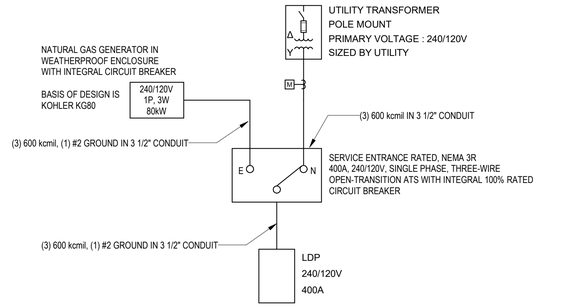

1 E-501 ONE-LINE DIAGRAM
NOT TO SCALE

MOXIFY
4334 NW EXPRESSWAY
SUITE 156
OKLAHOMA CITY, OK 73116
PHONE: (405) 254-5038
www.moxifyengineering.com
PROJECT: 501106
CA: 7612 EXP: 06/30/23

ARCHITECTS IN PARTNERSHIP
ARCHITECTS
INTERIOR DESIGNERS
PLANNERS
3220 MARSHALL AVENUE
NORMAN, OK 73072
TEL: 405.360.1300
FAX: 405.360.1431

SEAL:
LICENSED PROFESSIONAL ENGINEER
DAVID ISAAC WATERS 25178
OKLAHOMA
08/05/22

HENNESSEY FIRE DEPARTMENT
REMODEL/ADDITION
501 S. MAIN STREET
HENNESSEY, OKLAHOMA

REVISIONS

REV.	DATE	DESCRIPTION

PROJ. MANAGER: SAT
DRAWN BY: DIW
CHECKED BY: DIW

DATE: 08/08/2022
PROJECT NO.: 2111

SHEET TITLE: ELECTRICAL SCHEDULES
SHEET NO.: E-501

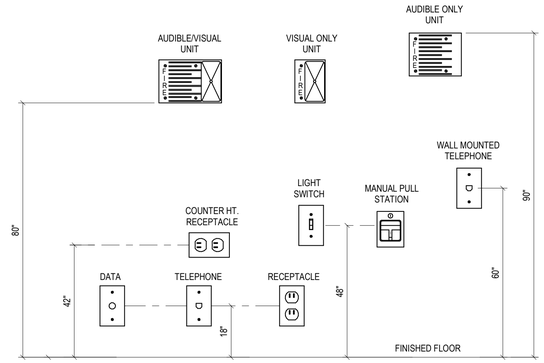

NOTES:

A. VERIFY EXACT MOUNTING HEIGHTS WITH PROJECT REQUIREMENTS.
B. ALL NEW DEVICES INSTALLED SHALL BE INSTALLED ACCORDING TO THE MOUNTING HEIGHTS INDICATED ABOVE UNLESS OTHERWISE NOTED.

1 E-601 MOUNTING HEIGHT DETAIL
NOT TO SCALE

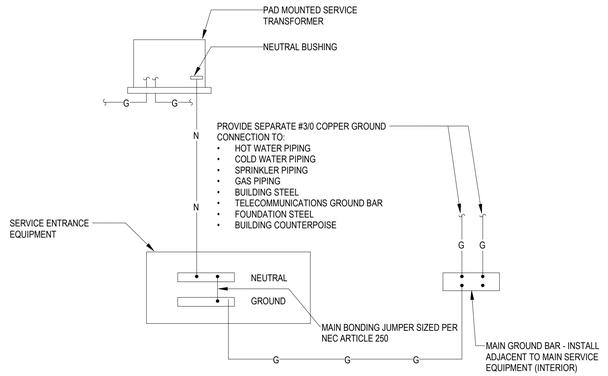

2 E-601 GROUNDING RISER
NOT TO SCALE

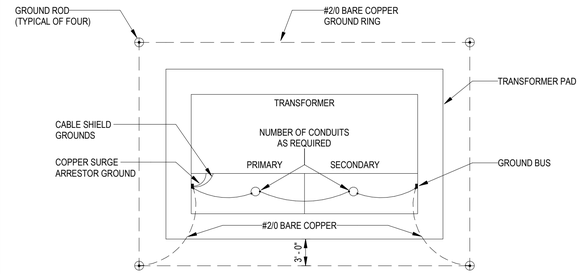

3 E-601 PAD MOUNT TRANSFORMER GROUNDING DETAIL
NOT TO SCALE

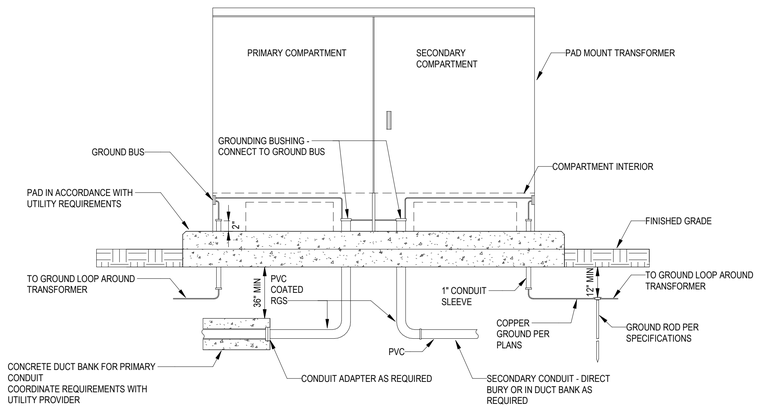

4 E-601 PAD MOUNT TRANSFORMER INTERNAL DETAIL
NOT TO SCALE

ARCHITECTS IN PARTNERSHIP

ARCHITECTS
INTERIOR DESIGNERS
PLANNERS

3220 MARSHALL AVENUE
NORMAN, OK 73072
TEL: 405.360.1300
FAX: 405.360.1431

SEAL:

LICENSED PROFESSIONAL ENGINEER
DAVID ISAAC WATERS
25178
OKLAHOMA
08/05/22

HENNESSEY FIRE DEPARTMENT

REMODEL/ADDITION

501 S. MAIN STREET

HENNESSEY, OKLAHOMA

REVISIONS

REV.	DATE	DESCRIPTION

PROJ. MANAGER:	SAT
DRAWN BY:	DIW
CHECKED BY:	DIW
DATE:	08/08/2022
PROJECT NO.:	2111
SHEET TITLE:	ELECTRICAL DETAILS
SHEET NO.:	E-601

MOXIFY

4334 NW EXPRESSWAY
SUITE 156
OKLAHOMA CITY, OK 73116
PHONE: (405) 254-5038
www.moxifyengineering.com
PROJECT: 501106
CA: 7612 EXP: 06/30/23

PROJECT MANUAL

DIVISION 00 00 00 - 33 00 00

HENNESSEY FIRE DEPARTMENT
REMODEL/ADDITION

HENNESSEY OKLAHOMA

ARCHITECTS
IN
PARTNERSHIP

ARCHITECTS
INTERIORS
PLANNERS

3220 MARSHALL AVENUE
NORMAN, OK 73072
TEL: 405.360.1300
FAX: 405.360.1431

SEAL



08/08/2022

ISSUE DATE
08/08/2022

PROJECT NUMBER
2111

SET NUMBER

DIVISION 00 - PROCUREMENT AND CONTRACTING REQUIREMENTS

PROJECT TITLE SECTION 00 01 01

PROJECT NAME:	Hennessey Fire Department Remodel/Addition
OWNER:	Kingfisher County Commissioners
PROJECT LOCATION:	501 S Main St. Hennessey, OK 73742
ARCHITECT:	ARCHITECTS IN PARTNERSHIP, LLC. 3220 Marshall Avenue Norman, OK 73072 Telephone: (405) 360 1300 Email: aip@aipok.com
PRINCIPAL IN CHARGE:	Gang Li
PROJECT MANAGER:	Mary Baily
ARCHITECT'S PROJECT NUMBER:	2111
CIVIL ENGINEERING:	Fox Engineering, Inc. 211 E. Street NW P.O. Box 666 Ardmore, OK 73402 Telephone: (580) 223-2319 Fax: (580) 223-2492
MECHANICAL AND ELECTRICAL ENGINEER:	Moxify Engineering LLC 4334 NW Expressway, Suite 156 Oklahoma City, OK 73116 Telephone: (405) 254-5038
STRUCTURAL ENGINEER:	Engineering Solutions Inc. LLC 6801 North Broadway, Suite 215 Oklahoma City, OK 73116 Telephone: (405) 848-4093 Fax: (405) 848-4094

END OF SECTION

DIVISION 00 - PROCUREMENT AND CONTRACTING REQUIREMENTS

SEALS PAGE SECTION 00 01 07

This section includes the Professional Seals by Design Professionals and others responsible for preparing the Construction Documents for Architect's project number 2111.

	ARCHITECT	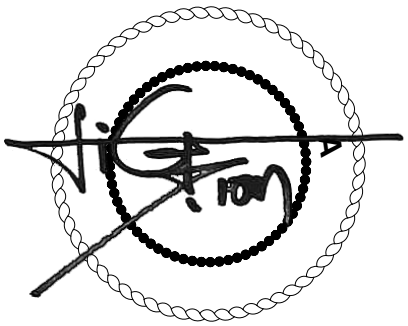
NAME:	**GANG LI**	
	4870	
	(PROFESSIONAL NUMBER)	

	ENGINEER	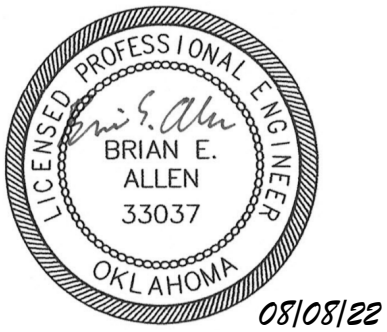
NAME:	**BRIAN E ALLEN**	
	33037	
	(PROFESSIONAL NUMBER)	

	ENGINEER	
NAME:	**DAVID ISAAC WATERS**	
	25178	
	(PROFESSIONAL NUMBER)	

ENGINEER		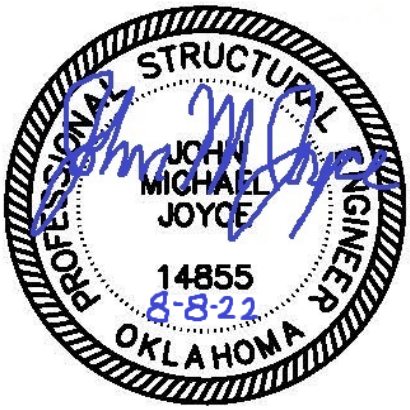
NAME:	**John M Joyce**	
Oklahoma Number 14855 (PROFESSIONAL NUMBER)		

ENGINEER		
NAME:	--	
(PROFESSIONAL NUMBER)		

END OF SECTION

----------THIS PAGE LEFT INTENTIONALLY BLANK----------

DIVISION 00 - PROCUREMENT AND CONTRACTING REQUIREMENTS

TABLE OF CONTENT SECTION 00 01 10

DIVISION 0 - INTRODUCTORY INFORMATION

00 01 01	PROJECT TITLE
00 01 07	SEALS PAGE
00 01 10	TABLE OF CONTENTS
00 11 13	ADVERTISEMENT FOR BIDS
00 21 13	INSTRUCTIONS TO BIDDERS
00 25 13	PRE BID MEETING
00 41 00	BID FORM
00 45 00	REPRESENTATIONS AND CERTIFICATIONS
00 50 00	CONTRACTING FORMS AND SUPPLEMENTS
00 72 00	GENERAL CONDITIONS
00 73 00	SUPPLEMENTARY CONDITIONS

DIVISION 1 - GENERAL REQUIREMENTS

01 11 00	SUMMARY OF WORK
01 20 00	PRICE AND PAYMENT PROCEDURES
01 21 00	ALLOWANCES
01 22 00	UNIT PRICES
01 23 00	ALTERNATES
01 25 00	SUBSTITUTIONS PROCEDURES
01 30 00	ADMINISTRATIVE REQUIREMENTS
01 31 00	PROJECT MANAGEMENT COORDINATION
01 31 14	FACILITY SERVICES COORDINATION
01 32 00	CONSTRUCTION PROGRESS SCHEDULE
01 33 00	SUBMITTALS PROCEDURES
01 35 53	SECURITY PROCEDURES
01 40 00	QUALITY REQUIREMENTS
01 41 00	REGULATORY REQUIREMENTS
01 42 00	REFERENCES
01 45 33	CODE-REQUIRED SPECIAL INSPECTIONS AND PROCEDURES
01 50 00	TEMPORARY FACILITIES AND CONTROLS
01 51 00	TEMPORARY UTILITIES
01 55 00	VEHICULAR ACCESS AND PARKING
01 57 13	TEMPORARY EROSION AND SEDIMANTATION CONTROL
01 58 13	TEMPORARY PROJECT SIGNAGE
01 60 00	PRODUCT REQUIREMENTS
01 61 16	VOLATILE ORGANIC COMPOUND (VOC) CONTENT RESTRICTIONS
01 61 20	AMERICANS WITH DISABILITIES ACT
01 61 23	ASBESTOS PROHIBITION
01 61 26	LEAD CONTAMINATION CONTROL ACT
01 73 00	EXECUTION
01 74 19	CONSTRUCTION WASTE MANAGEMENT AND DISPOSAL
01 77 00	CLOSEOUT PROCEDURES
01 78 00	CLOSEOUT SUBMITTALS
01 79 00	DEMONSTRATION AND TRAINING

DIVISION 2 - EXISTING CONDITIONS

02 32 00 GEOTECHNICAL INVESTIGATIONS
02 41 00 DEMOLITION
02 41 13 SITE DEMOLITION

DIVISION 3 - CONCRETE

03 11 00 CONCRETE FORMING
03 20 00 CONCRETE REINFORCING
03 30 00 CAST-IN-PLACE CONCRETE
03 30 05 CONRETE TESTING
03 30 10 CONCRETE PLACEMENT
03 35 00 CONCRETE FINISH
03 39 00 CONCRETE CURING

DIVISION 4 - MASONRY

04 05 11 MASONRY MORTARING AND GROUTING
04 21 13 BRICK MASONRY
04 22 00 CONCRETE UNIT MASONRY

DIVISION 5 - METALS

05 12 00 STRUCTURAL STEEL FRAMING
05 21 00 STEEL JOIST FRAMING
05 31 00 STEEL DECKING
05 40 00 COLD-FORMED METAL FRAMING
05 50 00 METAL FABRICATIONS
05 51 13 METAL PAN STAIRS
05 52 13 PIPE AND TUBE RAILINGS

DIVISION 6 - WOOD AND PLASTICS

06 10 00 ROUGH CARPENTRY
06 16 00 SHEATHING
06 20 00 FINISH CARPENTRY
06 41 00 ARCHITECTURAL WOOD CASEWORK

DIVISION 7 - THERMAL AND MOISTURE PROTECTION

07 21 00 THERMAL INSULATION
07 26 16 BELOW-GRADE VAPOR RETARDERS
07 62 00 SHEET METAL FLASHING AND TRIM
07 84 00 FIRESTOPPING
07 92 00 JOINT SEALERS

DIVISION 8 - OPENINGS

08 11 13 HOLLOW METAL DOORS AND FRAMES
08 14 16 FLUSH WOOD DOORS
08 36 00 SECTIONAL OVERHEAD DOORS
08 41 13 ALUMINUM-FRAMED ENTRANCES AND STOREFRONTS
08 71 00 DOOR HARDWARE
08 80 00 GLAZING
08 83 00 MIRRORS

DIVISION 9 - FINISHES

09 22 16 NON-STRUCTURAL METAL FRAMING
09 29 00 GYPSUM BOARD
09 30 00 TILING
09 51 13 ACOUSTICAL PANEL CEILING
09 65 13 RESILIENT BASE AND ACCESSORIES

09 65 19 RESILIENT TILE FLOORING
09 68 13 TILE CARPETING
09 91 00 PAINTING
09 93 00 STAINING AND TRANSPARENT FINISHING

DIVISION 10 - SPECIALTIES

10 14 00 SIGNAGE
10 21 13 TOILET COMPARTMENTS
10 26 13 CORNER GUARDS
10 28 13 TOILET ACCESSORIES
10 44 13 FIRE PROTECTION CABINETS
10 44 16 FIRE EXTINGUISHERS
10 73 00 METAL AWNINGS AND CANOPIES

DIVISION 11 - EQUIPMENT

NOT USED

DIVISION 12 - FURNISHINGS

NOT USED

DIVISION 13 - SPECIAL CONSTRUCTION

13 34 19 METAL BUILDING SYSTEMS

DIVISION 14 - CONVEYING EQUIPMENT

NOT USED

DIVISION 21 - FIRE SUPPRESSION

NOT USED

DIVISION 22 – PLUMBING

22 05 13 COMMON MOTOR REQUIREMENTS FOR PLUMBING EQUIPMENT
22 05 17 SLEEVES AND SLEEVE SEALS FOR PLUMBING PIPING
22 05 19 METERS AND GAUGES FOR PLUMBING PIPING
22 05 23 GENERAL-DUTY VALVES FOR PLUMBING PIPING
22 05 29 HANGERS AND SUPPORTS FOR PLUMBING PIPING AND EQUIPMENT
22 05 53 IDENTIFICATION FOR PLUMBING PIPING AND EQUIPMENT
22 07 19 PLUMBING PIPING INSULATION
22 10 05 PLUMBING PIPING
22 10 06 PLUMBING PIPING SPECIALTIES
22 11 23 FACILITY NATURAL-GAS PIPING
22 15 00 GENERAL-SERVICE COMPRESSED-AIR SYSTEMS
22 30 00 PLUMBING EQUIPMENT
22 40 00 PLUMBING FIXTURES

DIVISION 23 - HEATING, VENTILATING, AND AIR-CONDITIONING (HVAC)

23 05 13 COMMON MOTOR REQUIREMENTS FOR HVAC EQUIPMENT
23 05 17 SLEEVES AND SLEEVE SEALS FOR HVAC PIPING
23 05 29 HANGERS AND SUPPORTS FOR HVAC PIPING AND EQUIPMENT
23 05 53 IDENTIFICATION FOR HVAC PIPING AND EQUIPMENT
23 05 93 TESTING, ADJUSTING, AND BALANCING FOR HVAC
23 07 13 DUCT INSULATION
23 07 19 HVAC PIPING INSULATION
23 21 13 HYDRONIC PIPING
23 23 00 REFRIGERANT PIPING
23 31 00 HVAC DUCTS AND CASINGS
23 33 00 AIR DUCT ACCESSORIES

23 34 23 HVAC POWER VENTILATORS
23 37 00 AIR OUTLETS AND INLETS
23 37 24 LOUVERS
23 38 13 COMMERCIAL-KITCHEN HOODS
23 51 00 BREECHINGS, CHIMNEYS, AND STACKS
23 54 00 FURNACES
23 63 13 AIR COOLED REFRIGERANT CONDENSERS
23 82 00 CONVECTION HEATING AND COOLING UNITS
23 82 16 AIR COILS

DIVISION 26 - ELECTRICAL

26 05 05 SELECTIVE DEMOLITION FOR ELECTRICAL
26 05 19 LOW-VOLTAGE ELECTRICAL POWER CONDUCTORS AND CABLES
26 05 26 GROUNDING AND BONDING FOR ELECTRICAL SYSTEMS
26 05 29 HANGERS AND SUPPORTS FOR ELECTRICAL SYSTEMS
26 05 33.13 CONDUIT FOR ELECTRICAL SYSTEMS
26 05 33.16 BOXES FOR ELECTRICAL SYSTEMS
26 05 48 VIBRATION AND SEISMIC CONTROLS FOR ELECTRICAL SYSTEMS
26 05 53 IDENTIFICATION FOR ELECTRICAL SYSTEMS
26 05 73 POWER SYSTEM STUDIES
26 05 83 WIRING CONNECTIONS
26 09 23 LIGHTING CONTROL DEVICES
26 21 00 LOW-VOLTAGE ELECTRICAL SERVICE ENTRANCE
26 24 16 PANELBOARDS
26 27 13 ELECTRICITY METERING
26 27 26 WIRING DEVICES
26 28 13 FUSES
26 28 16.16 ENCLOSED SWITCHES
26 29 13 ENCLOSED CONTROLLERS
26 32 13 ENGINE GENERATORS
26 36 00 TRANSFER SWITCHES
26 43 00 SURGE PROTECTIVE DEVICES
26 51 00 INTERIOR LIGHTING
26 56 00 EXTERIOR LIGHTING

DIVISION 28 - ELECTRONIC SAFETY AND SECURITY

28 46 00 FIRE DETECTION AND ALARM

DIVISION 31 - EARTHWORK

31 05 06 STRUCTURAL CONCRETE FOR UTILITY SYSTEMS
31 20 20 GRADING
31 23 24 FILL AND BACKFILL
31 23 33 TRENCHING SITE FOR UTILITIES
31 31 16 SOIL TREATMENT FOR TERMITES
31 32 16 EXCAVATION

DIVISION 32 - EXTERIOR IMPROVEMENTS

32 01 19 FIELD MOLDED SEALANTS FOR SEALING JOINTS IN RIGID PAVEMENTS
32 11 24 GRADED CRUSHED AGGREGATE BASE COURSES
32 13 13 CONCRETE PAVEMENT
32 13 14 CONCRETE WALKS AND PADS
32 16 13 CONCRETE CURBS AND GUTTERS

32 17 23 PAVEMENT MARKINGS
32 92 20 SEEDING AND SODDING

DIVISION 33 - UTILITIES

33 11 15 SITE WATER DISTRIBUTION
33 13 05 DISINFECTION OF WATER DISTRIBUTION
33 31 15 SANITARY SEWERAGE
33 51 00 NATURAL GAS DISTRIBUTION

END OF SECTION

DEMOLITION . . . . . SECTION 02 4113

STRUCTURAL CONCRETE FOR UTILITY SYSTEMS . . . . . SECTION 31 0506

GRADING . . . . . SECTION 31 2200

FILL AND BACKFILL . . . . . SECTION 31 2324

TRENCHING SITE FOR UTILITIES . . . . . SECTION 31 2333

SOIL TREATMENT FOR TERMITES . . . . . SECTION 31 3116

EXCAVATION . . . . . SECTION 31 3216

FIELD MOLDED SEALANTS FOR SEALING JOINTS
IN RIGID PAVEMENTS . . . . . SECTION 32 0119

GRADED CRUSHED AGGREGATE BASE COURSES . . . . . SECTION 32 1124

CONCRETE PAVEMENT . . . . . SECTION 32 1313

CONCRETE WALKS AND PADS . . . . . SECTION 32 1314

CONCRETE CURBS AND GUTTERS . . . . . SECTION 32 1613

PAVEMENT MARKINGS . . . . . SECTION 32 1723

SEEDING AND SODDING . . . . . SECTION 32 9220

SITE WATER DISTRIBUTION . . . . . SECTION 33 1115

DISINFECTION OF WATER DISTRIBUTION . . . . . SECTION 33 1305

SANITARY SEWERAGE. . . . . SECTION 33 3115

NATURAL GAS DISTRIBUTION . . . . . SECTION 33 5100

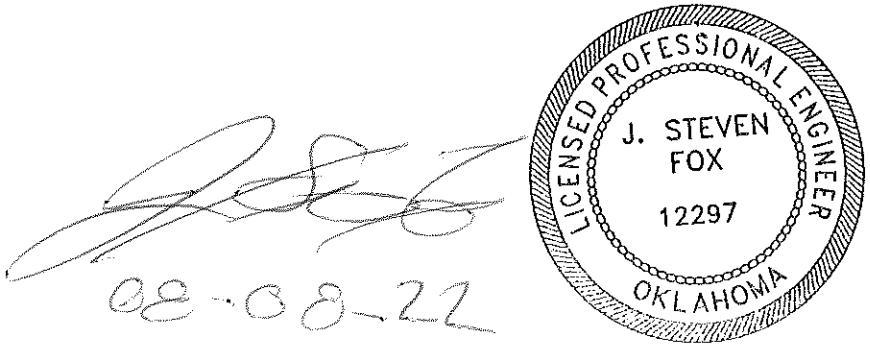

08-08-22

----------THIS PAGE LEFT INTENTIONALLY BLANK----------

DIVISION 00 - PROCUREMENT AND CONTRACTING REQUIREMENTS

ADVERTISEMENT FOR BIDS SECTION 00 11 13

Sealed bids addressed to the Owner will be received at the Place of Bid until the Time of Bid on the Bid Date and then will be opened and read publicly later.

PROJECT: Hennessey Fire Department Remodel/Addition
501 S Main St.
Hennessey, OK 73742

OWNER: Kingfisher County Commissioners
101 South Main Street #9.
Kingfisher, OK 73750

BID DATE: February 17, 2023

TIME OF BID: 4:30pm CDT

PLACE OF BID: Kingfisher County Courthouse Conference Room
101 S. Main Street
Kingfisher, OK 73750

Bids will be opened and read publicly at 9:00am on February 21 at Commissioner Meeting. Bids received more than ninety-six (96) hours, excluding Saturdays, Sundays, and holidays, before the time of bid, as well as any bids received after that time, will be returned unopened. Any bids received after the stated Time of Bid will be returned to the Bidder unopened.

Sealed bids addressed to the Kingfisher County Commissioners are requested to perform the construction Work.

The Owner will construct under the general contractor method and will be accepting a single bid for all Work required.

A copy of the Construction Document is on file at the office of the Commissioners and is open for public inspection. Interested parties shall arrange an appointment to review the documents and must visit the site or attend the pre-bid meeting. Please do not visit the site without making prior arrangements.

One paper set of Construction Documents will be made available to all interested parties for which a hundred ($100.00) dollar non-refundable deposit will be required. Electronic (CD) copies are available for twenty-five dollars ($25.00), each; non-refundable. Electronic Documents (PDF) can be downloaded at no cost. Construction Documents can be requested by contacting the Architect at: 405-360-1300. Document distribution will be provided by the Architect. Architects may need up to 48 business hours for paper set(s) to distribute.

Each Bidder shall submit their Proposal in a sealed envelope. Enclosed with their Proposal shall be executed copies of the Non-Collusion and Business Relationship Affidavits. Any bid not in compliance with the Construction Documents will be rejected.

Each Bidder shall submit, with the Proposal, a Bidder's Bond as required in Laws of Oklahoma and the Construction Documents. Such Bonds may be in the form of an irrevocable letter of credit, cashier's check or bid bond. Cash is not acceptable. All such bonds shall be made payable to the Owner in an amount no less than five (5%) percent of the largest combination of the Base Proposal and any Alternates. The Contractor may be required to forfeit the Bid Bond, to the Owner, in the event the Contractor fails to execute a Contract or fails to provide the required Bonding and Insurances.

Upon the Owner's acceptance of bids, a Contract will be executed between the Owner and the approved Bidder. All bonding and insurance will be attached to the executed Contract.

Bids may not be withdrawn for a period of thirty (30) calendar days after the date of this Bid Opening. The Owner reserves the right to reject any or all Bids and waive any informality or irregularity in any Bids received.

For information concerning any part of the proposed work, contact the Architect: Architects in Partnership, 3220 Marshall Ave., Norman, OK 73072. Telephone: (405) 360-1300.

BY: Kingfisher County Commissioners
101 S. Main Street #9
Kingfisher, OK 73750

END OF SECTION

SUMMARY

1.01 SEE AIA A701, INSTRUCTIONS TO BIDDERS FOLLOWING THIS DOCUMENT.

1.02 THE INSTRUCTIONS IN THIS DOCUMENT AMEND OR SUPPLEMENT THE INSTRUCTIONS TO BIDDERS AND OTHER PROVISIONS OF THE BIDDING AND CONTRACT DOCUMENTS.

1.03 DOCUMENT INCLUDES

A. Invitation
   1. Bid Submission
   2. Intent
   3. Work Identified in the Contract Documents
   4. Contract Time

B. Bid Documents and Contract Documents
   1. Definitions
   2. Contract Documents Identification
   3. Availability
   4. Examination
   5. Inquiries/Addenda
   6. Product/Assembly/System Substitutions

C. Site Assessment
   1. Site Examination

D. Qualifications
   1. Qualifications
   2. Prequalification
   3. Subcontractors/Suppliers/Others

E. Bid Submission
   1. Bid Depository
   2. Submission Procedure
   3. Bid Ineligibility

F. Bid Enclosures/Requirements
   1. Security Deposit
   2. Consent of Surety
   3. Performance Assurance
   4. Insurance
   5. Bid Form Requirements
   6. Fees for Changes in the Work
   7. Bid Form Signature
   8. Additional Bid Information
   9. Selection and Award of Alternates

G. Offer Acceptance/Rejection
   1. Duration of Offer
   2. Acceptance of Offer

1.04 RELATED DOCUMENTS

A. Document 01 1000 - Summary.

B. Document 00 1113 - Advertisement for Bids.

C. Document 00 4100 - Bid Form.

D. Document 00 7300 - Supplementary Conditions:

INVITATION

2.01 BID SUBMISSION

A. Bids signed and under seal, executed, and dated will be received at the office of the Owner at address below before 4:30pm. local daylight time on the August 12th 2022.

1. Kingfisher County Clerk's Office
   101 S. Main Street
   Kingfisher, Oklahoma 73750

B. Offers submitted after the above time shall be returned to the bidder unopened.

C. Offers will be opened publicly in following Monday commissioner's meeting after the time for receipt of bids.

D. Amendments to the submitted offer will be permitted if received in writing prior to bid closing and if endorsed by the same party or parties who signed and sealed the offer.

2.02 INTENT

A. The intent of this Bid request is to obtain an offer to demolish portion of an existing metal building and build a new metal building addition for Hennessey Fire Department located at 501 S Main St., Hennessey, OK 73742 for single Stipulated Sum contracts, in accordance with the Contract Documents.

2.03 WORK IDENTIFIED IN THE CONTRACT DOCUMENTS

A. Work of this proposed Contract comprises new construction, remodeling, renovation, and demolition, and other work as required to complete project, including general construction.

2.04 CONTRACT TIME

A. Owner requires that under the work of this contract be completed as quickly as possible and consideration will be given to time of completion when reviewing the submitted bids.

BID DOCUMENTS AND CONTRACT DOCUMENTS

3.01 DEFINITIONS

A. Bid Documents: Contract Documents supplemented with Invitation To Bid, Instructions to Bidders, Information Available to Bidders, Bid Form Supplements To Bid Forms and Appendices identified.

B. Contract Documents: Defined in General Conditions to the Contract, including issued Addenda.

C. Bid, Offer, or Bidding: Act of submitting an offer under seal.

D. Bid Amount: Monetary sum identified by the Bidder in the Bid Form.

E. Bid Form: A form which includes a specific space in which the bid price shall be inserted and which the Bidder shall sign and submit along with all other necessary submissions. A Bidder may submit a reasonable facsimile of the Bid Form. Bids received by facsimile or in electronic format will not be accepted.

F. Bidding Requirements: Notice of Invitation to Bid, Prebid Information, Instructions to Bidders, Information Available for Bidders, the Bid Form, Supplements to the Bid Form, and portions of Addenda relating to any of these.

G. Responsible Bidder: A Bidder who is properly licensed in accordance with the Construction Industries Licensing Act and submits a Responsive Bid and who has furnished, when required, information and data to prove that his financial resources, production or service facilities, personnel, service reputation, and experience are adequate to make satisfactory delivery of the services, construction, or items of tangible personal property described in the Invitation for Bid.

H. Responsive Bid: A bid which conforms in all material respects to the requirements set forth in the Invitation for Bid.

I. Successful Bidder: The lowest Responsible Bidder to whom the Owner, on the basis of the Owner's evaluation, makes an award. A Successful Bidder does not become the contractor until an agreement with the Owner is signed.

3.02 CONTRACT DOCUMENTS IDENTIFICATION

A. The Contract Documents are identified as Project Number 2111, as prepared by Architect, and with contents as identified in the Table of Contents.

3.03 AVAILABILITY

A. Bid Documents may be obtained at the office of Architect.

B. One sets of Bid Documents can be obtained by bidders upon receipt of a deposit, by certified check, in the

amount of $100.00 for one set. Electronic copy in PDF format can be download from online at no cost.

C. Bid Documents are made available only for the purpose of obtaining offers for this project. Their use does not grant a license for other purposes.

3.04 EXAMINATION

A. Bid Documents may be viewed at the office of Architect.

B. Bid Documents may be viewed at the office of Owner.

C. Bid Documents are on display at the offices of the following construction plan rooms:

1. Southwest Construction News.
2. ISQFT.
3. E-Plan
4. Dodge

D. It is the intent of these Bidding Documents to be as clear, complete and consistent as possible.

E. Bidders are required to carefully review the:

1. Bidding Documents (drawings and specifications).
2. Bid Form.
3. Contract for construction

F. Upon receipt of Bid Documents verify that documents are complete. Notify Architect should the documents be incomplete.

G. Immediately notify Architect upon finding discrepancies or omissions in the Bid Documents.

H. The Bidder shall not take advantage of any error in the Bidding Documents. Anything mentioned in the specifications and not shown on the drawings, or shown on the drawings and not mentioned in the specifications, shall be of like effect as if shown on or mentioned in both. In case of any apparent difference between the drawings and specifications, or any other apparent discrepancy which the Bidder may discover, the matter shall be referred to the Architect as to which, in accordance with the intent of the Bidding Documents, shall govern. The Owner and the Architect shall have the right to correct any error discovered.

3.05 INQUIRIES/ADDENDA

A. Direct questions to the Architect, email: gang.li@aipok.com.

B. Addenda may be issued during the bidding period. All Addenda become part of the Contract Documents. Include resultant costs in the Bid Amount.

C. Verbal answers are not binding on any party.

D. Clarifications requested by bidders must be in writing not less than 4 days before date set for receipt of bids. The reply will be in the form of an Addendum, a copy of which will be forwarded to known recipients.

3.06 PRODUCT/ASSEMBLY/SYSTEM SUBSTITUTIONS

A. Where the Bid Documents stipulate a particular product, substitutions will be considered up to 5 days before receipt of bids.

B. When a request to substitute a product is made, Architect may approve the substitution and will issue an Addendum to known bidders.

C. The submission shall provide sufficient information to determine acceptability of such products.

D. Provide complete information on required revisions to other work to accommodate each proposed substitution.

E. Provide products as specified unless substitutions are submitted in this manner and accepted.

F. See Section 01 25 00 - Substitutions Procedures for additional requirements.

G. See Section 01 60 00 - Product Requirements for additional requirements.

SITE ASSESSMENT

4.01 SITE EXAMINATION

A. Examine the project site before submitting a bid.

B. On request, the Owner will provide each Bidder access to the site to conduct investigations and tests as each Bidder deems necessary for submission of his Bid.

C. Bidders shall promptly notify Architect of any ambiguity, inconsistency, or error which they may discover

upon examination of the site and local conditions.

D. The lands upon which the Work is to be performed, rights-of-way for access thereto, and other lands designated for use by the Contractor in performing the work are identified in the Bidding Documents.

E. The submission of a Bid will constitute an incontrovertible representation by the Bidder that he has complied with every requirement of this Section and that the Bidding Documents are sufficient in scope and detail to indicate and convey understanding of all terms and conditions for performance of the Work.

4.02 PREBID CONFERENCE

A. Architect along with representative of Owner will conduct a Prebid Conference for this project on project site at location of 501 S Main St., Hennessey, OK 73742, refer to 00 25 13 Pre-Bid Meeting

B. Architect and his consultants, as applicable, shall be represented. Prospective Bidders, Prospective Subcontractors, and Prospective Vendors are encouraged to attend and should be prepared to ask questions regarding substitutions and to request clarification of the Bidding Documents. The failure of a Bidder, Subcontractor, or Vendor to attend shall be interpreted to mean that the Bidding Documents are clear and acceptable to all non-participants at the Prebid Conference. Such clarity and acceptability shall be presumed with respect to all Bidders.

C. Questions and requests for clarification presented in written form will receive written response, and if warranted, issued as Addenda. No verbal response shall be binding.

QUALIFICATIONS

5.01 EVIDENCE OF QUALIFICATIONS

A. To demonstrate qualification for performing the Work of this Contract, bidders may be requested to submit written evidence of financial position, license to perform work in the State.

5.02 SUBCONTRACTORS/SUPPLIERS/OTHERS

A. Owner reserves the right to reject a proposed subcontractor for reasonable cause.

B. Refer to General Conditions.

BID SUBMISSION

6.01 BID DEPOSITORY

A. The five percent (5%) Bid Depository system of bid collection shall be used for all trades.

B. The rules and regulations of this bid deposit system, in force on the day of bid submission shall apply.

6.02 SUBMISSION PROCEDURE

A. Bidders shall be solely responsible for the delivery of their bids in the manner and time prescribed.

1. No other party, Owner or Architect, etc. is responsible for making sure the submitted Bid is delivered to the location where the Bid will be opened and read aloud; no exception.

B. Submit one copy of the executed offer on the Bid Forms provided, signed and sealed with the required security in a closed opaque envelope, clearly identified with bidder's name, project name and Owner's name on the outside.

C. Incomplete bid submission, may be cause to reject the Bid Form and declare the bid invalid or informal.

D. An abstract summary of submitted bids will be made available to all bidders following bid opening.

6.03 BID INELIGIBILITY

A. Bids that are unsigned, improperly signed or sealed, conditional, illegible, obscure, contain arithmetical errors, erasures, alterations, or irregularities of any kind, may at the discretion of the Owner, be declared unacceptable.

B. Bid Forms, Appendices, and enclosures that are improperly prepared may, at the discretion of Owner, be declared unacceptable.

C. Failure to provide security deposit, bonding or insurance requirements may, at the discretion of Owner, invalidate the bid.

D. Failure to provide the business relationship and noncollusion affidavits will invalidate the bid.

BID ENCLOSURES/REQUIREMENTS

7.01 SECURITY DEPOSIT

A. Bids shall be accompanied by a security deposit as follows:

1. Bid Bond of a sum no less than 5 percent of the Bid Amount on AIA A310 Bid Bond Form. Certified check and irrevocable letter of credit, as allowed by the Competitive Bidding Act, will be allowed.

B. Endorse the Bid Bond in the name of the Owner as obligee, signed and sealed by the principal (Contractor) and surety.

C. The security deposit will be returned after delivery to the Owner of the required Defect, Performance and Payment Bond(s) by the accepted bidder.

D. Include the cost of bid security in the Bid Amount.

E. After a bid has been accepted, all securities will be returned to the respective bidders and other requested enclosures.

F. If no contract is awarded, all security deposits will be returned.

7.02 PERFORMANCE ASSURANCE

A. Accepted Bidder: Provide a Performance bond as described in 00 73 00 - Supplementary Conditions.

B. Include the cost of Performance and Payment Bonds and Defect Bond in the Bid Amount.

7.03 INSURANCE

A. Provide an executed "Undertaking of Insurance" on a standard form provided by the insurance company stating their intention to provide insurance to the bidder in accordance with the insurance requirements of the Contract Documents.

7.04 BID FORM REQUIREMENTS

A. Complete all requested information in the Bid Form and Appendices.

B. Taxes: Refer to Document 00 73 00 - Supplementary Conditions for products that are tax exempt.

7.05 FEES FOR CHANGES IN THE WORK

A. Include in the Bid Form, the overhead and profit fees on own Work and Work by subcontractors, applicable for Changes in the Work, whether additions to or deductions from the Work on which the Bid Amount is based.

7.06 BID FORM SIGNATURE

A. The Bid Form shall be signed by the bidder, as follows:

1. Sole Proprietorship: Signature of sole proprietor in the presence of a witness who will also sign. Insert the words "Sole Proprietor" under the signature. Affix seal.

2. Partnership: Signature of all partners in the presence of a witness who will also sign. Insert the word "Partner" under each signature. Affix seal to each signature.

3. Corporation: Signature of a duly authorized signing officer(s) in their normal signatures. Insert the officer's capacity in which the signing officer acts, under each signature. Affix the corporate seal. If the bid is signed by officials other than the president and secretary of the company, or the president/secretary/treasurer of the company, a copy of the by-law resolution of their board of directors authorizing them to do so, must also be submitted with the Bid Form in the bid envelope.

4. Joint Venture: Each party of the joint venture shall execute the Bid Form under their respective seals in a manner appropriate to such party as described above, similar to the requirements of a Partnership.

7.07 ADDITIONAL BID INFORMATION

A. The lowest bidder will be requested to complete the Supplements To Bid Forms within 24 hours after submission of bids.

B. Submit the following Supplements 48 hours after bid submission:

1. Document 00 43 73 - Proposed Schedule of Values Form identifies the Bid Amount segmented into portions as requested.

7.08 SELECTION AND AWARD OF ALTERNATES

A. Indicate variation of bid price for Alternates listed on the Bid Form. Unless otherwise indicated, indicate Alternatives as a difference in bid price by adding to or deducting from the base bid price.

B. Bids will be evaluated on the base bid price, plus consideration of Alternates with bid price adjustments to determine of a successful bidder.

OFFER ACCEPTANCE/REJECTION

8.01 DURATION OF OFFER

A. Bids shall remain open to acceptance and shall be irrevocable for a period of thirty (30) days after the bid closing date.

8.02 ACCEPTANCE OF OFFER

A. Owner reserves the right to accept or reject any or all offers.

B. After acceptance by Owner, Architect on behalf of Owner, will issue to the successful bidder, a written letter of Contract Award.

END OF SECTION

DIVISION 00 - PROCUREMENT AND CONTRACTING REQUIREMENTS

PRE-BID MEETING SECTION 00 25 13

A pre-bid conference will be held at the time, date and location specified below:

Date/Time: 10am, February 7th, 2023

Location: Project Site
501 S Main St.
Hennessey, OK 73742

Each bidder is specifically advised that attendance at this Pre-bid Conference is not Mandatory. If you cannot make to this pre-bid meeting and want to visit the project site, contact architect to schedule an onsite visit with owner.

END OF SECTION

PART 1 - GENERAL

THE PROJECT AND THE PARTIES

1.01 TO:

A. Kingfisher County Commissioners (Owner)
101 S. Main Street #9
Kingfisher, Oklahoma 73750

1.02 FOR:

A. Project: Hennessey Fire Department Remodel/Addition

B. Architect's Project Number: 2111

1.03 DATE: _____ (BIDDER TO ENTER DATE)

1.04 SUBMITTED BY: (BIDDER TO ENTER NAME AND ADDRESS)

A. Bidder's Full Name:

_____

Address:

_____

City, State, Zip:

_____

Type of Entity:

_____

1.05 OFFER

A. Having examined the Place of The Work and all matters referred to in the Instructions to Bidders and the Contract Documents prepared by the Architect for the above-mentioned project, we, the undersigned, hereby offer to enter into a Contract to perform the Work for the Sum of:

1.06 TO PROVIDE ALL WORK INDICATED OR REASONABLY IMPLIED BY THE CONSTRUCTION DOCUMENTS:

A. Base Bid:

_____dollars

($_____),
in lawful money of the United States of America.

B. Allowance:

No. 1: Testing and Inspecting

_____dollars

($_____),
in lawful money of the United States of America.

C. Alternate:

No. 1: New Metal Wall Panel

_____dollars

($_____),

in lawful money of the United States of America.

No. 2: Brick Edge

_____dollars

($_____),

in lawful money of the United States of America.

No. 3: New Brick Veneer

_____dollars

($_____),

in lawful money of the United States of America.

1.07 WE HAVE INCLUDED THE REQUIRED SECURITY DEPOSIT AS REQUIRED BY THE INSTRUCTION TO BIDDERS.

1.08 WE HAVE INCLUDED THE REQUIRED DEFECT, PERFORMANCE AND PAYMENT ASSURANCE BONDS IN THE BID AMOUNT AS REQUIRED BY THE INSTRUCTIONS TO BIDDERS.

1.09 ALL APPLICABLE FEDERAL TAXES ARE INCLUDED AND STATE OF OKLAHOMA SALES TAXES ARE EXCLUDED FROM THE BID SUM.

1.10 ACCEPTANCE

A. This offer shall be open to acceptance and is irrevocable for thirty days from the bid closing date.

B. If this bid is accepted by Owner within the time period stated above, we will:

1. Execute the Agreement within seven days of receipt of Notice of Award.
2. Furnish the required bonds within seven days of receipt of Notice of Award.
3. Commence work within seven days after written Notice to Proceed of this bid.

C. If this bid is accepted within the time stated, and we fail to commence the Work or we fail to provide the required Bond(s), the security deposit shall be forfeited as damages to Owner by reason of our failure, limited in amount to the lesser of the face value of the security deposit or the difference between this bid and the bid upon which a Contract is signed.

D. In the event our bid is not accepted within the time stated above, the required security deposit shall be returned to the undersigned, in accordance with the provisions of the Instructions to Bidders; unless a mutually satisfactory arrangement is made for its retention and validity for an extended period of time.

1.11 CONTRACT TIME

A. If Awarded the Contract, the undersigned Bidder agrees to complete the Work described as Base Bid with City of Hennessey approval to occupancy within the following number of calendar days from the date specified in the Notice to Proceed: (_____) Calendar Days.

1.12 CHANGES TO THE WORK

A. When Architect establishes that the method of valuation for Changes in the Work will be net cost plus a percentage fee in accordance with General Conditions, our percentage fee will be:

1. _____ percent overhead and profit on the net cost of our own Work;
2. _____ percent on the cost of work done by any Subcontractor.

B. On work deleted from the Contract, our credit to Owner shall be Architect-approved net cost plus _____ of the overhead and profit percentage noted above.

1.13 ADDENDA

A. The following Addenda have been received. The modifications to the Bid Documents noted below have been considered and all costs are included in the Bid Sum.

1. Addendum # _____ Dated _____.
2. Addendum # _____ Dated _____.
3. Addendum # _____ Dated _____.
4. Addendum # _____ Dated _____.
5. Addendum # _____ Dated _____.
6. Addendum # _____ Dated _____.

1.14 BID FORM SUPPLEMENTS

A. The following information is included with Bid submission:

1. Executed Noncollusion Affidavit
2. Executed Business Relationship Affidavit.

1.15 BID FORM SIGNATURE(S)

The Corporate Seal of

_____

(Bidder - print the full name of your firm)

was hereunto affixed in the presence of:

_____

(Authorized signing officer, Title)

(Seal)

_____

(Authorized signing officer, Title)

1.16 IF THE BID IS A JOINT VENTURE OR PARTNERSHIP, ADD ADDITIONAL FORMS OF EXECUTION FOR EACH MEMBER OF THE JOINT VENTURE IN THE APPROPRIATE FORM OR FORMS AS ABOVE.

END OF SECTION

BUSINESS RELATIONSHIP AFFIDAVIT

STATE OF _____)
)ss
COUNTY OF _____)

_____of lawful age, being first duly sworn, on oath says that (s)he is the agent authorized by the bidder to submit the attached bid. Affiant further states that the nature of any partnership, joint venture, or other business relationship presently in effect or which existed within one (1) year prior to the date of this statement with the architect, engineer or other party of the project is as follows: (if none, so state)

_____

_____

Affiant further states that any such business relationship presently in effect or which existed within one (1) year prior to the date of this statement between any officer or director of the architectural or engineering firm or other party of the project as follows. (If none, so state)

_____

_____

Affiant further states that the names of all persons having any such business relationships and the positions thy hold with their respective companies or firms as follows:

_____

_____

(If none of the business relationships herein above mentioned exist, affiant should so state.)

_____
Affiant

Subscribed and sworn before me this_____day of_____, 20___.

_____
Notary Public

My Commission Expires:_____

THIS AFFIDAVIT SHALL ACCOMPANY PROPOSAL

NONCOLLUSION AFFIDAVIT

STATE OF _____)
)ss
COUNTY OF _____)

_____, of lawful age, being first duly sworn, on oath says:

1. (s)he is the duly authorized agent of_____, the bidder submitting the competitive bid which is attached to this statement, for the purpose of certifying the facts pertaining to the existence of collusion among bidders and between bidders and state officials or employees, as well as facts pertaining to the giving or offering of things of value to government personnel in return for special consideration in the letting of any contract pursuant to the bid to which this statement is attached;

2. (s)he is fully aware of the facts and circumstances surrounding the making of the bid to which this statement is attached and has been personally and directly involved in the proceedings leading to the submission of such bid; and

3. neither the bidder nor anyone subject to the bidder's direction or control has been a party:

    a. to any collusion among bidders in restraint of freedom of competition by agreement to bid at a fixed price or to refrain from bidding,

    b. to any collusion with any state official or employee as to quantity, quality or price in the prospective contract, or as to any other terms of such prospective contract, nor

    c. in any discussions between bidders and any state official concerning exchange of money or other thing of value for special consideration in the letting of a contract.

_____

Affiant

Subscribed and sworn before me this_____day of_____, 20___

_____

Notary Public

My Commission Expires:_____

THIS AFFIDAVIT SHALL ACCOMPANY PROPOSAL

PART 1 - GENERAL

1.01 AGREEMENT AND CONDITIONS OF THE CONTRACT

A. See Section 00 7200 - General Conditions for the General Conditions.

B. See Section 00 7300 - Supplementary Conditions for the Supplementary Conditions.

C. The Agreement is based on AIA A101.

D. The General Conditions are based on AIA A201.

E. The Guide for Supplementary Conditions includes AIA A503.

1.02 FORMS

A. Use the following forms for the specified purposes unless otherwise indicated elsewhere in the Contract Documents.

B. Bond Forms:

1. Bid Bond Form: AIA A310.
2. Performance and Payment Bond Form: AIA A312.

C. Post-Award Certificates and Other Forms:

1. Submittal Transmittal Letter Form: AIA G810.
2. Schedule of Values Form: AIA G703.
3. Application for Payment Forms: AIA G702 with AIA G703 (for Contractors).

D. Clarification and Modification Forms:

1. Architect's Supplemental Instructions Form: AIA G710.
2. Construction Change Directive Form: AIA G714.
3. Change Order Form: AIA G701.

E. Closeout Forms:

1. Certificate of Substantial Completion Form: AIA G704.

1.03 REFERENCE STANDARDS

A. AIA A101 - Standard Form of Agreement Between Owner and Contractor where the basis of Payment is a Stipulated Sum; 2017.

B. AIA A201 - General Conditions of the Contract for Construction; 2017.

C. AIA A310 - Bid Bond; 2010.

D. AIA A312 - Performance Bond and Payment Bond; 2010.

E. AIA A503 - Guide for Supplementary Conditions; 2007.

F. AIA G701 - Change Order; 2017.

G AIA G702 - Application and Certificate for Payment; 2017.

H. AIA G703 - Continuation Sheet; 2017.

I. AIA G704 - Certificate of Substantial Completion; 2017.

J. AIA G710 - Architect's Supplemental Instructions; 2017.

K. AIA G714 - Construction Change Directive; 2017.

L. AIA G810 - Transmittal Letter; 2001.

PART 2 - PRODUCTS (NOT USED)

PART 3 - EXECUTION (NOT USED)

END OF SECTION

PART 1 - GENERAL

1.01 FORM OF GENERAL CONDITIONS

A. The General Conditions applicable to this contract is AIA Document A201 - 2017.

1.02 RELATED REQUIREMENTS

A. Section 00 73 00 - Supplementary Conditions.

1.03 SUPPLEMENTARY CONDITIONS

A. Refer to document 00 73 00 - Supplementary Conditions for amendments to the general conditions.

PART 2 - PRODUCTS

NOT USED

PART 3 - EXECUTION

NOT USED

END OF SECTION

AIA® Document A201® – 2017

General Conditions of the Contract for Construction

for the following PROJECT:
(Name and location or address)

Hennessey Fire Department
Hennessey, Oklahoma

THE OWNER:
(Name, legal status and address)

Kingfisher County Commissioners
101 S. Main St. #9
Kingfisher, Oklahoma 73750

THE ARCHITECT:
(Name, legal status and address)

Architects in Partnership, LLC
3220 Marshall Avenue
Norman, Oklahoma 73072
Telephone Number: (405) 360-1300
Fax Number: (405) 360-1431

ADDITIONS AND DELETIONS:
The author of this document has added information needed for its completion. The author may also have revised the text of the original AIA standard form. An *Additions and Deletions Report* that notes added information as well as revisions to the standard form text is available from the author and should be reviewed. A vertical line in the left margin of this document indicates where the author has added necessary information and where the author has added to or deleted from the original AIA text.

This document has important legal consequences. Consultation with an attorney is encouraged with respect to its completion or modification.

For guidance in modifying this document to include supplementary conditions, see AIA Document A503™, Guide for Supplementary Conditions.

TABLE OF ARTICLES

1 GENERAL PROVISIONS

2 OWNER

3 CONTRACTOR

4 ARCHITECT

5 SUBCONTRACTORS

6 CONSTRUCTION BY OWNER OR BY SEPARATE CONTRACTORS

7 CHANGES IN THE WORK

8 TIME

9 PAYMENTS AND COMPLETION

10 PROTECTION OF PERSONS AND PROPERTY

11 INSURANCE AND BONDS

12 UNCOVERING AND CORRECTION OF WORK

13 MISCELLANEOUS PROVISIONS

AIA Document A201® – 2017. Copyright © 1911, 1915, 1918, 1925, 1937, 1951, 1958, 1961, 1963, 1966, 1970, 1976, 1987, 1997, 2007 and 2017 by The American Institute of Architects. All rights reserved. The "American Institute of Architects," "AIA," the AIA Logo, "A201," and "AIA Contract Documents" are registered trademarks and may not be used without permission. This document was produced by AIA software at 16:31:54 ET on 05/19/2022 under Order No.7850528272 which expires on 08/08/2022, is not for resale, is licensed for one-time use only, and may only be used in accordance with the AIA Contract Documents® Terms of Service. To report copyright violations, e-mail copyright@aia.org.
User Notes: (1818773814)

14 TERMINATION OR SUSPENSION OF THE CONTRACT

15 CLAIMS AND DISPUTES

AIA Document A201® – 2017. Copyright © 1911, 1915, 1918, 1925, 1937, 1951, 1958, 1961, 1963, 1966, 1970, 1976, 1987, 1997, 2007 and 2017 by The American Institute of Architects. All rights reserved. The "American Institute of Architects," "AIA," the AIA Logo, "A201," and "AIA Contract Documents" are registered trademarks and may not be used without permission. This document was produced by AIA software at 16:31:54 ET on 05/19/2022 under Order No.7850528272 which expires on 08/08/2022, is not for resale, is licensed for one-time use only, and may only be used in accordance with the AIA Contract Documents® Terms of Service. To report copyright violations, e-mail copyright@aia.org.
User Notes: (1818773814)

INDEX
(Topics and numbers in bold are Section headings.)

Acceptance of Nonconforming Work
9.6.6, 9.9.3, **12.3**
Acceptance of Work
9.6.6, 9.8.2, 9.9.3, 9.10.1, 9.10.3, 12.3
Access to Work
3.16, 6.2.1, 12.1
Accident Prevention
10
Acts and Omissions
3.2, 3.3.2, 3.12.8, 3.18, 4.2.3, 8.3.1, 9.5.1, 10.2.5, 10.2.8, 13.3.2, 14.1, 15.1.2, 15.2
Addenda
1.1.1
Additional Costs, Claims for
3.7.4, 3.7.5, 10.3.2, 15.1.5
Additional Inspections and Testing
9.4.2, 9.8.3, 12.2.1, **13.4**
Additional Time, Claims for
3.2.4, 3.7.4, 3.7.5, 3.10.2, 8.3.2, **15.1.6**
Administration of the Contract
3.1.3, **4.2**, 9.4, 9.5
Advertisement or Invitation to Bid
1.1.1
Aesthetic Effect
4.2.13
Allowances
3.8
Applications for Payment
4.2.5, 7.3.9, 9.2, **9.3**, 9.4, 9.5.1, 9.5.4, 9.6.3, 9.7, 9.10
Approvals
2.1.1, 2.3.1, 2.5, 3.1.3, 3.10.2, 3.12.8, 3.12.9, 3.12.10.1, 4.2.7, 9.3.2, 13.4.1
Arbitration
8.3.1, 15.3.2, **15.4**
ARCHITECT
4
Architect, Definition of
4.1.1
Architect, Extent of Authority
2.5, 3.12.7, 4.1.2, 4.2, 5.2, 6.3, 7.1.2, 7.3.4, 7.4, 9.2, 9.3.1, 9.4, 9.5, 9.6.3, 9.8, 9.10.1, 9.10.3, 12.1, 12.2.1, 13.4.1, 13.4.2, 14.2.2, 14.2.4, 15.1.4, 15.2.1
Architect, Limitations of Authority and Responsibility
2.1.1, 3.12.4, 3.12.8, 3.12.10, 4.1.2, 4.2.1, 4.2.2, 4.2.3, 4.2.6, 4.2.7, 4.2.10, 4.2.12, 4.2.13, 5.2.1, 7.4, 9.4.2, 9.5.4, 9.6.4, 15.1.4, 15.2
Architect's Additional Services and Expenses
2.5, 12.2.1, 13.4.2, 13.4.3, 14.2.4
Architect's Administration of the Contract
3.1.3, 3.7.4, 15.2, 9.4.1, 9.5
Architect's Approvals
2.5, 3.1.3, 3.5, 3.10.2, 4.2.7
Architect's Authority to Reject Work
3.5, 4.2.6, 12.1.2, 12.2.1
Architect's Copyright
1.1.7, 1.5
Architect's Decisions
3.7.4, 4.2.6, 4.2.7, 4.2.11, 4.2.12, 4.2.13, 4.2.14, 6.3, 7.3.4, 7.3.9, 8.1.3, 8.3.1, 9.2, 9.4.1, 9.5, 9.8.4, 9.9.1, 13.4.2, 15.2
Architect's Inspections
3.7.4, 4.2.2, 4.2.9, 9.4.2, 9.8.3, 9.9.2, 9.10.1, 13.4
Architect's Instructions
3.2.4, 3.3.1, 4.2.6, 4.2.7, 13.4.2
Architect's Interpretations
4.2.11, 4.2.12
Architect's Project Representative
4.2.10
Architect's Relationship with Contractor
1.1.2, 1.5, 2.3.3, 3.1.3, 3.2.2, 3.2.3, 3.2.4, 3.3.1, 3.4.2, 3.5, 3.7.4, 3.7.5, 3.9.2, 3.9.3, 3.10, 3.11, 3.12, 3.16, 3.18, 4.1.2, 4.2, 5.2, 6.2.2, 7, 8.3.1, 9.2, 9.3, 9.4, 9.5, 9.7, 9.8, 9.9, 10.2.6, 10.3, 11.3, 12, 13.3.2, 13.4, 15.2
Architect's Relationship with Subcontractors
1.1.2, 4.2.3, 4.2.4, 4.2.6, 9.6.3, 9.6.4, 11.3
Architect's Representations
9.4.2, 9.5.1, 9.10.1
Architect's Site Visits
3.7.4, 4.2.2, 4.2.9, 9.4.2, 9.5.1, 9.9.2, 9.10.1, 13.4
Asbestos
10.3.1
Attorneys' Fees
3.18.1, 9.6.8, 9.10.2, 10.3.3
Award of Separate Contracts
6.1.1, 6.1.2
Award of Subcontracts and Other Contracts for Portions of the Work
5.2
Basic Definitions
1.1
Bidding Requirements
1.1.1
Binding Dispute Resolution
8.3.1, 9.7, 11.5, 13.1, 15.1.2, 15.1.3, 15.2.1, 15.2.5, 15.2.6.1, 15.3.1, 15.3.2, 15.3.3, 15.4.1
Bonds, Lien
7.3.4.4, 9.6.8, 9.10.2, 9.10.3
Bonds, Performance, and Payment
7.3.4.4, 9.6.7, 9.10.3, **11.1.2**, 11.1.3, **11.5**
Building Information Models Use and Reliance
1.8
Building Permit
3.7.1
Capitalization
1.3
Certificate of Substantial Completion
9.8.3, 9.8.4, 9.8.5

AIA Document A201® – 2017. Copyright © 1911, 1915, 1918, 1925, 1937, 1951, 1958, 1961, 1963, 1966, 1970, 1976, 1987, 1997, 2007 and 2017 by The American Institute of Architects. All rights reserved. The "American Institute of Architects," "AIA," the AIA Logo, "A201," and "AIA Contract Documents" are registered trademarks and may not be used without permission. This document was produced by AIA software at 16:31:54 ET on 05/19/2022 under Order No.7850528272 which expires on 08/08/2022, is not for resale, is licensed for one-time use only, and may only be used in accordance with the AIA Contract Documents® Terms of Service. To report copyright violations, e-mail copyright@aia.org.
User Notes:
(1818773814)

Certificates for Payment
4.2.1, 4.2.5, 4.2.9, 9.3.3, **9.4**, 9.5, 9.6.1, 9.6.6, 9.7, 9.10.1, 9.10.3, 14.1.1.3, 14.2.4, 15.1.4
Certificates of Inspection, Testing or Approval
13.4.4
Certificates of Insurance
9.10.2
Change Orders
1.1.1, 3.4.2, 3.7.4, 3.8.2.3, 3.11, 3.12.8, 4.2.8, 5.2.3, 7.1.2, 7.1.3, **7.2**, 7.3.2, 7.3.7, 7.3.9, 7.3.10, 8.3.1, 9.3.1.1, 9.10.3, 10.3.2, 11.2, 11.5, 12.1.2
Change Orders, Definition of
7.2.1
CHANGES IN THE WORK
2.2.2, 3.11, 4.2.8, **7**, 7.2.1, 7.3.1, 7.4, 8.3.1, 9.3.1.1, 11.5
Claims, Definition of
15.1.1
Claims, Notice of
1.6.2, 15.1.3
CLAIMS AND DISPUTES
3.2.4, 6.1.1, 6.3, 7.3.9, 9.3.3, 9.10.4, 10.3.3, **15**, 15.4
Claims and Timely Assertion of Claims
15.4.1
Claims for Additional Cost
3.2.4, 3.3.1, 3.7.4, 7.3.9, 9.5.2, 10.2.5, 10.3.2, **15.1.5**
Claims for Additional Time
3.2.4, 3.3.1, 3.7.4, 6.1.1, 8.3.2, 9.5.2, 10.3.2, **15.1.6**
Concealed or Unknown Conditions, Claims for
3.7.4
Claims for Damages
3.2.4, 3.18, 8.3.3, 9.5.1, 9.6.7, 10.2.5, 10.3.3, 11.3, 11.3.2, 14.2.4, 15.1.7
Claims Subject to Arbitration
15.4.1
Cleaning Up
3.15, 6.3
Commencement of the Work, Conditions Relating to
2.2.1, 3.2.2, 3.4.1, 3.7.1, 3.10.1, 3.12.6, 5.2.1, 5.2.3, 6.2.2, 8.1.2, 8.2.2, 8.3.1, 11.1, 11.2, **15.1.5**
Commencement of the Work, Definition of
8.1.2
Communications
3.9.1, **4.2.4**
Completion, Conditions Relating to
3.4.1, 3.11, 3.15, 4.2.2, 4.2.9, 8.2, 9.4.2, 9.8, 9.9.1, 9.10, 12.2, 14.1.2, 15.1.2
COMPLETION, PAYMENTS AND
9
Completion, Substantial
3.10.1, 4.2.9, 8.1.1, 8.1.3, 8.2.3, 9.4.2, 9.8, 9.9.1, 9.10.3, 12.2, 15.1.2
Compliance with Laws
2.3.2, 3.2.3, 3.6, 3.7, 3.12.10, 3.13, 9.6.4, 10.2.2, 13.1, 13.3, 13.4.1, 13.4.2, 13.5, 14.1.1, 14.2.1.3, 15.2.8, 15.4.2, 15.4.3
Concealed or Unknown Conditions
3.7.4, 4.2.8, 8.3.1, 10.3
Conditions of the Contract
1.1.1, 6.1.1, 6.1.4
Consent, Written
3.4.2, 3.14.2, 4.1.2, 9.8.5, 9.9.1, 9.10.2, 9.10.3, 13.2, 15.4.4.2
Consolidation or Joinder
15.4.4
CONSTRUCTION BY OWNER OR BY
SEPARATE CONTRACTORS
1.1.4, **6**
Construction Change Directive, Definition of
7.3.1
Construction Change Directives
1.1.1, 3.4.2, 3.11, 3.12.8, 4.2.8, 7.1.1, 7.1.2, 7.1.3, **7.3**, 9.3.1.1
Construction Schedules, Contractor's
3.10, 3.11, 3.12.1, 3.12.2, 6.1.3, 15.1.6.2
Contingent Assignment of Subcontracts
5.4, 14.2.2.2
Continuing Contract Performance
15.1.4
Contract, Definition of
1.1.2
CONTRACT, TERMINATION OR
SUSPENSION OF THE
5.4.1.1, 5.4.2, 11.5, **14**
Contract Administration
3.1.3, 4, 9.4, 9.5
Contract Award and Execution, Conditions Relating to
3.7.1, 3.10, 5.2, 6.1
Contract Documents, Copies Furnished and Use of
1.5.2, 2.3.6, 5.3
Contract Documents, Definition of
1.1.1
Contract Sum
2.2.2, 2.2.4, 3.7.4, 3.7.5, 3.8, 3.10.2, 5.2.3, 7.3, 7.4, **9.1**, 9.2, 9.4.2, 9.5.1.4, 9.6.7, 9.7, 10.3.2, 11.5, 12.1.2, 12.3, 14.2.4, 14.3.2, 15.1.4.2, **15.1.5, 15.2.5**
Contract Sum, Definition of
9.1
Contract Time
1.1.4, 2.2.1, 2.2.2, 3.7.4, 3.7.5, 3.10.2, 5.2.3, 6.1.5, 7.2.1.3, 7.3.1, 7.3.5, 7.3.6, 7, 7, 7.3.10, 7.4, 8.1.1, 8.2.1, 8.2.3, 8.3.1, 9.5.1, 9.7, 10.3.2, 12.1.1, 12.1.2, 14.3.2, 15.1.4.2, 15.1.6.1, 15.2.5
Contract Time, Definition of
8.1.1
CONTRACTOR
3
Contractor, Definition of
3.1, 6.1.2
Contractor's Construction and Submittal
Schedules
3.10, 3.12.1, 3.12.2, 4.2.3, 6.1.3, 15.1.6.2

AIA Document A201® – 2017. Copyright © 1911, 1915, 1918, 1925, 1937, 1951, 1958, 1961, 1963, 1966, 1970, 1976, 1987, 1997, 2007 and 2017 by The American Institute of Architects. All rights reserved. The "American Institute of Architects," "AIA," the AIA Logo, "A201," and "AIA Contract Documents" are registered trademarks and may not be used without permission. This document was produced by AIA software at 16:31:54 ET on 05/19/2022 under Order No.7850528272 which expires on 08/08/2022, is not for resale, is licensed for one-time use only, and may only be used in accordance with the AIA Contract Documents® Terms of Service. To report copyright violations, e-mail copyright@aia.org.
User Notes:
(1818773814)

Contractor's Employees
2.2.4, 3.3.2, 3.4.3, 3.8.1, 3.9, 3.18.2, 4.2.3, 4.2.6, 10.2, 10.3, 11.3, 14.1, 14.2.1.1
Contractor's Liability Insurance
11.1
Contractor's Relationship with Separate Contractors and Owner's Forces
3.12.5, 3.14.2, 4.2.4, 6, 11.3, 12.2.4
Contractor's Relationship with Subcontractors
1.2.2, 2.2.4, 3.3.2, 3.18.1, 3.18.2, 4.2.4, 5, 9.6.2, 9.6.7, 9.10.2, 11.2, 11.3, 11.4
Contractor's Relationship with the Architect
1.1.2, 1.5, 2.3.3, 3.1.3, 3.2.2, 3.2.3, 3.2.4, 3.3.1, 3.4.2, 3.5.1, 3.7.4, 3.10, 3.11, 3.12, 3.16, 3.18, 4.2, 5.2, 6.2.2, 7, 8.3.1, 9.2, 9.3, 9.4, 9.5, 9.7, 9.8, 9.9, 10.2.6, 10.3, 11.3, 12, 13.4, 15.1.3, 15.2.1
Contractor's Representations
3.2.1, 3.2.2, 3.5, 3.12.6, 6.2.2, 8.2.1, 9.3.3, 9.8.2
Contractor's Responsibility for Those Performing the Work
3.3.2, 3.18, 5.3, 6.1.3, 6.2, 9.5.1, 10.2.8
Contractor's Review of Contract Documents
3.2
Contractor's Right to Stop the Work
2.2.2, 9.7
Contractor's Right to Terminate the Contract
14.1
Contractor's Submittals
3.10, 3.11, 3.12, 4.2.7, 5.2.1, 5.2.3, 9.2, 9.3, 9.8.2, 9.8.3, 9.9.1, 9.10.2, 9.10.3
Contractor's Superintendent
3.9, 10.2.6
Contractor's Supervision and Construction Procedures
1.2.2, 3.3, 3.4, 3.12.10, 4.2.2, 4.2.7, 6.1.3, 6.2.4, 7.1.3, 7.3.4, 7.3.6, 8.2, 10, 12, 14, 15.1.4
Coordination and Correlation
1.2, 3.2.1, 3.3.1, 3.10, 3.12.6, 6.1.3, 6.2.1
Copies Furnished of Drawings and Specifications
1.5, 2.3.6, 3.11
Copyrights
1.5, **3.17**
Correction of Work
2.5, 3.7.3, 9.4.2, 9.8.2, 9.8.3, 9.9.1, 12.1.2, **12.2**, 12.3, 15.1.3.1, 15.1.3.2, 15.2.1
Correlation and Intent of the Contract Documents
1.2
Cost, Definition of
7.3.4
Costs
2.5, 3.2.4, 3.7.3, 3.8.2, 3.15.2, 5.4.2, 6.1.1, 6.2.3, 7.3.3.3, 7.3.4, 7.3.8, 7.3.9, 9.10.2, 10.3.2, 10.3.6, 11.2, 12.1.2, 12.2.1, 12.2.4, 13.4, 14
Cutting and Patching
3.14, 6.2.5
Damage to Construction of Owner or Separate Contractors
3.14.2, 6.2.4, 10.2.1.2, 10.2.5, 10.4, 12.2.4
Damage to the Work
3.14.2, 9.9.1, 10.2.1.2, 10.2.5, 10.4, 12.2.4
Damages, Claims for
3.2.4, 3.18, 6.1.1, 8.3.3, 9.5.1, 9.6.7, 10.3.3, 11.3.2, 11.3, 14.2.4, 15.1.7
Damages for Delay
6.2.3, 8.3.3, 9.5.1.6, 9.7, 10.3.2, 14.3.2
Date of Commencement of the Work, Definition of
8.1.2
Date of Substantial Completion, Definition of
8.1.3
Day, Definition of
8.1.4
Decisions of the Architect
3.7.4, 4.2.6, 4.2.7, 4.2.11, 4.2.12, 4.2.13, 6.3, 7.3.4, 7.3.9, 8.1.3, 8.3.1, 9.2, 9.4, 9.5.1, 9.8.4, 9.9.1, 13.4.2, 14.2.2, 14.2.4, 15.1, 15.2
Decisions to Withhold Certification
9.4.1, **9.5**, 9.7, 14.1.1.3
Defective or Nonconforming Work, Acceptance, Rejection and Correction of
2.5, 3.5, 4.2.6, 6.2.3, 9.5.1, 9.5.3, 9.6.6, 9.8.2, 9.9.3, 9.10.4, 12.2.1
Definitions
1.1, 2.1.1, 3.1.1, 3.5, 3.12.1, 3.12.2, 3.12.3, 4.1.1, 5.1, 6.1.2, 7.2.1, 7.3.1, 8.1, 9.1, 9.8.1, 15.1.1
Delays and Extensions of Time
3.2, **3.7.4**, 5.2.3, 7.2.1, 7.3.1, **7.4**, **8.3**, 9.5.1, **9.7**, 10.3.2, **10.4**, 14.3.2, **15.1.6**, 15.2.5
Digital Data Use and Transmission
1.7
Disputes
6.3, 7.3.9, 15.1, 15.2
Documents and Samples at the Site
3.11
Drawings, Definition of
1.1.5
Drawings and Specifications, Use and Ownership of
3.11
Effective Date of Insurance
8.2.2
Emergencies
10.4, 14.1.1.2, **15.1.5**
Employees, Contractor's
3.3.2, 3.4.3, 3.8.1, 3.9, 3.18.2, 4.2.3, 4.2.6, 10.2, 10.3.3, 11.3, 14.1, 14.2.1.1
Equipment, Labor, or Materials
1.1.3, 1.1.6, 3.4, 3.5, 3.8.2, 3.8.3, 3.12, 3.13, 3.15.1, 4.2.6, 4.2.7, 5.2.1, 6.2.1, 7.3.4, 9.3.2, 9.3.3, 9.5.1.3, 9.10.2, 10.2.1, 10.2.4, 14.2.1.1, 14.2.1.2
Execution and Progress of the Work
1.1.3, 1.2.1, 1.2.2, 2.3.4, 2.3.6, 3.1, 3.3.1, 3.4.1, 3.7.1, 3.10.1, 3.12, 3.14, 4.2, 6.2.2, 7.1.3, 7.3.6, 8.2, 9.5.1, 9.9.1, 10.2, 10.3, 12.1, 12.2, 14.2, 14.3.1, 15.1.4

AIA Document A201® – 2017. Copyright © 1911, 1915, 1918, 1925, 1937, 1951, 1958, 1961, 1963, 1966, 1970, 1976, 1987, 1997, 2007 and 2017 by The American Institute of Architects. All rights reserved. The "American Institute of Architects," "AIA," the AIA Logo, "A201," and "AIA Contract Documents" are registered trademarks and may not be used without permission. This document was produced by AIA software at 16:31:54 ET on 05/19/2022 under Order No.7850528272 which expires on 08/08/2022, is not for resale, is licensed for one-time use only, and may only be used in accordance with the AIA Contract Documents® Terms of Service. To report copyright violations, e-mail copyright@aia.org.
User Notes:
(1818773814)

Extensions of Time
3.2.4, 3.7.4, 5.2.3, 7.2.1, 7.3, 7.4, 9.5.1, 9.7, 10.3.2, 10.4, 14.3, 15.1.6, **15.2.5**
Failure of Payment
9.5.1.3, **9.7**, 9.10.2, 13.5, 14.1.1.3, 14.2.1.2
Faulty Work
(See Defective or Nonconforming Work)
Final Completion and Final Payment
4.2.1, 4.2.9, 9.8.2, **9.10**, 12.3, 14.2.4, 14.4.3
Financial Arrangements, Owner's
2.2.1, 13.2.2, 14.1.1.4
GENERAL PROVISIONS
1
Governing Law
13.1
Guarantees (See Warranty)
Hazardous Materials and Substances
10.2.4, **10.3**
Identification of Subcontractors and Suppliers
5.2.1
Indemnification
3.17, **3.18**, 9.6.8, 9.10.2, 10.3.3, 11.3
Information and Services Required of the Owner
2.1.2, **2.2**, 2.3, 3.2.2, 3.12.10.1, 6.1.3, 6.1.4, 6.2.5, 9.6.1, 9.9.2, 9.10.3, 10.3.3, 11.2, 13.4.1, 13.4.2, 14.1.1.4, 14.1.4, 15.1.4
Initial Decision
15.2
Initial Decision Maker, Definition of
1.1.8
Initial Decision Maker, Decisions
14.2.4, 15.1.4.2, 15.2.1, 15.2.2, 15.2.3, 15.2.4, 15.2.5
Initial Decision Maker, Extent of Authority
14.2.4, 15.1.4.2, 15.2.1, 15.2.2, 15.2.3, 15.2.4, 15.2.5
Injury or Damage to Person or Property
10.2.8, 10.4
Inspections
3.1.3, 3.3.3, 3.7.1, 4.2.2, 4.2.6, 4.2.9, 9.4.2, 9.8.3, 9.9.2, 9.10.1, 12.2.1, 13.4
Instructions to Bidders
1.1.1
Instructions to the Contractor
3.2.4, 3.3.1, 3.8.1, 5.2.1, 7, 8.2.2, 12, 13.4.2
Instruments of Service, Definition of
1.1.7
Insurance
6.1.1, 7.3.4, 8.2.2, 9.3.2, 9.8.4, 9.9.1, 9.10.2, 10.2.5, **11**
Insurance, Notice of Cancellation or Expiration
11.1.4, 11.2.3
Insurance, Contractor's Liability
11.1
Insurance, Effective Date of
8.2.2, 14.4.2
Insurance, Owner's Liability
11.2
Insurance, Property
10.2.5, 11.2, 11.4, 11.5
Insurance, Stored Materials
9.3.2
INSURANCE AND BONDS
11
Insurance Companies, Consent to Partial Occupancy
9.9.1
Insured loss, Adjustment and Settlement of
11.5
Intent of the Contract Documents
1.2.1, 4.2.7, 4.2.12, 4.2.13
Interest
13.5
Interpretation
1.1.8, 1.2.3, **1.4**, 4.1.1, 5.1, 6.1.2, 15.1.1
Interpretations, Written
4.2.11, 4.2.12
Judgment on Final Award
15.4.2
Labor and Materials, Equipment
1.1.3, 1.1.6, **3.4**, 3.5, 3.8.2, 3.8.3, 3.12, 3.13, 3.15.1, 5.2.1, 6.2.1, 7.3.4, 9.3.2, 9.3.3, 9.5.1.3, 9.10.2, 10.2.1, 10.2.4, 14.2.1.1, 14.2.1.2
Labor Disputes
8.3.1
Laws and Regulations
1.5, 2.3.2, 3.2.3, 3.2.4, 3.6, 3.7, 3.12.10, 3.13, 9.6.4, 9.9.1, 10.2.2, 13.1, 13.3.1, 13.4.2, 13.5, 14, 15.2.8, 15.4
Liens
2.1.2, 9.3.1, 9.3.3, 9.6.8, 9.10.2, 9.10.4, 15.2.8
Limitations, Statutes of
12.2.5, 15.1.2, 15.4.1.1
Limitations of Liability
3.2.2, 3.5, 3.12.10, 3.12.10.1, 3.17, 3.18.1, 4.2.6, 4.2.7, 6.2.2, 9.4.2, 9.6.4, 9.6.7, 9.6.8, 10.2.5, 10.3.3, 11.3, 12.2.5, 13.3.1
Limitations of Time
2.1.2, 2.2, 2.5, 3.2.2, 3.10, 3.11, 3.12.5, 3.15.1, 4.2.7, 5.2, 5.3, 5.4.1, 6.2.4, 7.3, 7.4, 8.2, 9.2, 9.3.1, 9.3.3, 9.4.1, 9.5, 9.6, 9.7, 9.8, 9.9, 9.10, 12.2, 13.4, 14, 15, 15.1.2, 15.1.3, 15.1.5
Materials, Hazardous
10.2.4, **10.3**
Materials, Labor, Equipment and
1.1.3, 1.1.6, 3.4.1, 3.5, 3.8.2, 3.8.3, 3.12, 3.13, 3.15.1, 5.2.1, 6.2.1, 7.3.4, 9.3.2, 9.3.3, 9.5.1.3, 9.10.2, 10.2.1.2, 10.2.4, 14.2.1.1, 14.2.1.2
Means, Methods, Techniques, Sequences and Procedures of Construction
3.3.1, 3.12.10, 4.2.2, 4.2.7, 9.4.2
Mechanic's Lien
2.1.2, 9.3.1, 9.3.3, 9.6.8, 9.10.2, 9.10.4, 15.2.8
Mediation
8.3.1, 15.1.3.2, 15.2.1, 15.2.5, 15.2.6, **15.3**, 15.4.1, 15.4.1.1
Minor Changes in the Work
1.1.1, 3.4.2, 3.12.8, 4.2.8, 7.1, **7.4**

AIA Document A201® – 2017. Copyright © 1911, 1915, 1918, 1925, 1937, 1951, 1958, 1961, 1963, 1966, 1970, 1976, 1987, 1997, 2007 and 2017 by The American Institute of Architects. All rights reserved. The "American Institute of Architects," "AIA," the AIA Logo, "A201," and "AIA Contract Documents" are registered trademarks and may not be used without permission. This document was produced by AIA software at 16:31:54 ET on 05/19/2022 under Order No.7850528272 which expires on 08/08/2022, is not for resale, is licensed for one-time use only, and may only be used in accordance with the AIA Contract Documents® Terms of Service. To report copyright violations, e-mail copyright@aia.org.
User Notes:
(1818773814)

MISCELLANEOUS PROVISIONS
13
Modifications, Definition of
1.1.1
Modifications to the Contract
1.1.1, 1.1.2, 2.5, 3.11, 4.1.2, 4.2.1, 5.2.3, 7, 8.3.1, 9.7, 10.3.2
Mutual Responsibility
6.2
Nonconforming Work, Acceptance of
9.6.6, 9.9.3, **12.3**
Nonconforming Work, Rejection and Correction of
2.4, 2.5, 3.5, 4.2.6, 6.2.4, 9.5.1, 9.8.2, 9.9.3, 9.10.4, 12.2
Notice
1.6, 1.6.1, 1.6.2, 2.1.2, 2.2.2., 2.2.3, 2.2.4, 2.5, 3.2.4, 3.3.1, 3.7.4, 3.7.5, 3.9.2, 3.12.9, 3.12.10, 5.2.1, 7.4, 8.2.2 9.6.8, 9.7, 9.10.1, 10.2.8, 10.3.2, 11.5, 12.2.2.1, 13.4.1, 13.4.2, 14.1, 14.2.2, 14.4.2, 15.1.3, 15.1.5, 15.1.6, 15.4.1
Notice of Cancellation or Expiration of Insurance
11.1.4, 11.2.3
Notice of Claims
1.6.2, 2.1.2, 3.7.4, 9.6.8, 10.2.8, **15.1.3**, 15.1.5, 15.1.6, 15.2.8, 15.3.2, 15.4.1
Notice of Testing and Inspections
13.4.1, 13.4.2
Observations, Contractor's
3.2, 3.7.4
Occupancy
2.3.1, 9.6.6, 9.8
Orders, Written
1.1.1, 2.4, 3.9.2, 7, 8.2.2, 11.5, 12.1, 12.2.2.1, 13.4.2, 14.3.1
OWNER
2
Owner, Definition of
2.1.1
Owner, Evidence of Financial Arrangements
2.2, 13.2.2, 14.1.1.4
Owner, Information and Services Required of the
2.1.2, **2.2**, 2.3, 3.2.2, 3.12.10, 6.1.3, 6.1.4, 6.2.5, 9.3.2, 9.6.1, 9.6.4, 9.9.2, 9.10.3, 10.3.3, 11.2, 13.4.1, 13.4.2, 14.1.1.4, 14.1.4, 15.1.4
Owner's Authority
1.5, 2.1.1, 2.3.32.4, 2.5, 3.4.2, 3.8.1, 3.12.10, 3.14.2, 4.1.2, 4.2.4, 4.2.9, 5.2.1, 5.2.4, 5.4.1, 6.1, 6.3, 7.2.1, 7.3.1, 8.2.2, 8.3.1, 9.3.2, 9.5.1, 9.6.4, 9.9.1, 9.10.2, 10.3.2, 11.4, 11.5, 12.2.2, 12.3, 13.2.2, 14.3, 14.4, 15.2.7
Owner's Insurance
11.2
Owner's Relationship with Subcontractors
1.1.2, 5.2, 5.3, 5.4, 9.6.4, 9.10.2, 14.2.2
Owner's Right to Carry Out the Work
2.5, 14.2.2
Owner's Right to Clean Up
6.3
Owner's Right to Perform Construction and to Award Separate Contracts
6.1
Owner's Right to Stop the Work
2.4
Owner's Right to Suspend the Work
14.3
Owner's Right to Terminate the Contract
14.2, 14.4
Ownership and Use of Drawings, Specifications and Other Instruments of Service
1.1.1, 1.1.6, 1.1.7, **1.5**, 2.3.6, 3.2.2, 3.11, 3.17, 4.2.12, 5.3
Partial Occupancy or Use
9.6.6, **9.9**
Patching, Cutting and
3.14, 6.2.5
Patents
3.17
Payment, Applications for
4.2.5, 7.3.9, 9.2, **9.3**, 9.4, 9.5, 9.6.3, 9.7, 9.8.5, 9.10.1, 14.2.3, 14.2.4, 14.4.3
Payment, Certificates for
4.2.5, 4.2.9, 9.3.3, **9.4**, 9.5, 9.6.1, 9.6.6, 9.7, 9.10.1, 9.10.3, 14.1.1.3, 14.2.4
Payment, Failure of
9.5.1.3, **9.7**, 9.10.2, 13.5, 14.1.1.3, 14.2.1.2
Payment, Final
4.2.1, 4.2.9, **9.10**, 12.3, 14.2.4, 14.4.3
Payment Bond, Performance Bond and
7.3.4.4, 9.6.7, 9.10.3, **11.1.2**
Payments, Progress
9.3, **9.6**, 9.8.5, 9.10.3, 14.2.3, 15.1.4
PAYMENTS AND COMPLETION
9
Payments to Subcontractors
5.4.2, 9.5.1.3, 9.6.2, 9.6.3, 9.6.4, 9.6.7, 14.2.1.2
PCB
10.3.1
Performance Bond and Payment Bond
7.3.4.4, 9.6.7, 9.10.3, **11.1.2**
Permits, Fees, Notices and Compliance with Laws
2.3.1, **3.7**, 3.13, 7.3.4.4, 10.2.2
PERSONS AND PROPERTY, PROTECTION OF
10
Polychlorinated Biphenyl
10.3.1
Product Data, Definition of
3.12.2
Product Data and Samples, Shop Drawings
3.11, **3.12**, 4.2.7
Progress and Completion
4.2.2, **8.2**, 9.8, 9.9.1, 14.1.4, 15.1.4
Progress Payments
9.3, **9.6**, 9.8.5, 9.10.3, 14.2.3, 15.1.4

AIA Document A201® – 2017. Copyright © 1911, 1915, 1918, 1925, 1937, 1951, 1958, 1961, 1963, 1966, 1970, 1976, 1987, 1997, 2007 and 2017 by The American Institute of Architects. All rights reserved. The "American Institute of Architects," "AIA," the AIA Logo, "A201," and "AIA Contract Documents" are registered trademarks and may not be used without permission. This document was produced by AIA software at 16:31:54 ET on 05/19/2022 under Order No.7850528272 which expires on 08/08/2022, is not for resale, is licensed for one-time use only, and may only be used in accordance with the AIA Contract Documents® Terms of Service. To report copyright violations, e-mail copyright@aia.org.
User Notes:
(1818773814)

Project, Definition of
1.1.4
Project Representatives
4.2.10
Property Insurance
10.2.5, **11.2**
Proposal Requirements
1.1.1
PROTECTION OF PERSONS AND PROPERTY
10
Regulations and Laws
1.5, 2.3.2, 3.2.3, 3.6, 3.7, 3.12.10, 3.13, 9.6.4, 9.9.1, 10.2.2, 13.1, 13.3, 13.4.1, 13.4.2, 13.5, 14, 15.2.8, 15.4
Rejection of Work
4.2.6, 12.2.1
Releases and Waivers of Liens
9.3.1, 9.10.2
Representations
3.2.1, 3.5, 3.12.6, 8.2.1, 9.3.3, 9.4.2, 9.5.1, 9.10.1
Representatives
2.1.1, 3.1.1, 3.9, 4.1.1, 4.2.10, 13.2.1
Responsibility for Those Performing the Work
3.3.2, 3.18, 4.2.2, 4.2.3, 5.3, 6.1.3, 6.2, 6.3, 9.5.1, 10
Retainage
9.3.1, 9.6.2, 9.8.5, 9.9.1, 9.10.2, 9.10.3
Review of Contract Documents and Field Conditions by Contractor
3.2, 3.12.7, 6.1.3
Review of Contractor's Submittals by Owner and Architect
3.10.1, 3.10.2, 3.11, 3.12, 4.2, 5.2, 6.1.3, 9.2, 9.8.2
Review of Shop Drawings, Product Data and Samples by Contractor
3.12
Rights and Remedies
1.1.2, 2.4, 2.5, 3.5, 3.7.4, 3.15.2, 4.2.6, 5.3, 5.4, 6.1, 6.3, 7.3.1, 8.3, 9.5.1, 9.7, 10.2.5, 10.3, 12.2.1, 12.2.2, 12.2.4, **13.3**, 14, 15.4
Royalties, Patents and Copyrights
3.17
Rules and Notices for Arbitration
15.4.1
Safety of Persons and Property
10.2, 10.4
Safety Precautions and Programs
3.3.1, 4.2.2, 4.2.7, 5.3, **10.1**, 10.2, 10.4
Samples, Definition of
3.12.3
Samples, Shop Drawings, Product Data and
3.11, **3.12**, 4.2.7
Samples at the Site, Documents and
3.11
Schedule of Values
9.2, 9.3.1
Schedules, Construction
3.10, 3.12.1, 3.12.2, 6.1.3, 15.1.6.2
Separate Contracts and Contractors
1.1.4, 3.12.5, 3.14.2, 4.2.4, 4.2.7, 6, 8.3.1, 12.1.2
Separate Contractors, Definition of
6.1.1
Shop Drawings, Definition of
3.12.1
Shop Drawings, Product Data and Samples
3.11, **3.12**, 4.2.7
Site, Use of
3.13, 6.1.1, 6.2.1
Site Inspections
3.2.2, 3.3.3, 3.7.1, 3.7.4, 4.2, 9.9.2, 9.4.2, 9.10.1, 13.4
Site Visits, Architect's
3.7.4, 4.2.2, 4.2.9, 9.4.2, 9.5.1, 9.9.2, 9.10.1, 13.4
Special Inspections and Testing
4.2.6, 12.2.1, 13.4
Specifications, Definition of
1.1.6
Specifications
1.1.1, **1.1.6**, 1.2.2, 1.5, 3.12.10, 3.17, 4.2.14
Statute of Limitations
15.1.2, 15.4.1.1
Stopping the Work
2.2.2, 2.4, 9.7, 10.3, 14.1
Stored Materials
6.2.1, 9.3.2, 10.2.1.2, 10.2.4
Subcontractor, Definition of
5.1.1
SUBCONTRACTORS
5
Subcontractors, Work by
1.2.2, 3.3.2, 3.12.1, 3.18, 4.2.3, 5.2.3, 5.3, 5.4, 9.3.1.2, 9.6.7
Subcontractual Relations
5.3, 5.4, 9.3.1.2, 9.6, 9.10, 10.2.1, 14.1, 14.2.1
Submittals
3.10, 3.11, 3.12, 4.2.7, 5.2.1, 5.2.3, 7.3.4, 9.2, 9.3, 9.8, 9.9.1, 9.10.2, 9.10.3
Submittal Schedule
3.10.2, 3.12.5, 4.2.7
Subrogation, Waivers of
6.1.1, **11.3**
Substances, Hazardous
10.3
Substantial Completion
4.2.9, 8.1.1, 8.1.3, 8.2.3, 9.4.2, **9.8**, 9.9.1, 9.10.3, 12.2, 15.1.2
Substantial Completion, Definition of
9.8.1
Substitution of Subcontractors
5.2.3, 5.2.4
Substitution of Architect
2.3.3
Substitutions of Materials
3.4.2, 3.5, 7.3.8
Sub-subcontractor, Definition of
5.1.2

AIA Document A201® – 2017. Copyright © 1911, 1915, 1918, 1925, 1937, 1951, 1958, 1961, 1963, 1966, 1970, 1976, 1987, 1997, 2007 and 2017 by The American Institute of Architects. All rights reserved. The "American Institute of Architects," "AIA," the AIA Logo, "A201," and "AIA Contract Documents" are registered trademarks and may not be used without permission. This document was produced by AIA software at 16:31:54 ET on 05/19/2022 under Order No.7850528272 which expires on 08/08/2022, is not for resale, is licensed for one-time use only, and may only be used in accordance with the AIA Contract Documents® Terms of Service. To report copyright violations, e-mail copyright@aia.org.
User Notes:
(1818773814)

Subsurface Conditions
3.7.4
Successors and Assigns
13.2
Superintendent
3.9, 10.2.6
Supervision and Construction Procedures
1.2.2, **3.3**, 3.4, 3.12.10, 4.2.2, 4.2.7, 6.1.3, 6.2.4, 7.1.3, 7.3.4, 8.2, 8.3.1, 9.4.2, 10, 12, 14, 15.1.4
Suppliers
1.5, 3.12.1, 4.2.4, 4.2.6, 5.2.1, 9.3, 9.4.2, 9.5.4, 9.6, 9.10.5, 14.2.1
Surety
5.4.1.2, 9.6.8, 9.8.5, 9.10.2, 9.10.3, 11.1.2, 14.2.2, 15.2.7
Surety, Consent of
9.8.5, 9.10.2, 9.10.3
Surveys
1.1.7, 2.3.4
Suspension by the Owner for Convenience
14.3
Suspension of the Work
3.7.5, 5.4.2, 14.3
Suspension or Termination of the Contract
5.4.1.1, 14
Taxes
3.6, 3.8.2.1, 7.3.4.4
Termination by the Contractor
14.1, 15.1.7
Termination by the Owner for Cause
5.4.1.1, **14.2,** 15.1.7
Termination by the Owner for Convenience
14.4
Termination of the Architect
2.3.3
Termination of the Contractor Employment
14.2.2

TERMINATION OR SUSPENSION OF THE CONTRACT
14
Tests and Inspections
3.1.3, 3.3.3, 3.7.1, 4.2.2, 4.2.6, 4.2.9, 9.4.2, 9.8.3, 9.9.2, 9.10.1, 10.3.2, 12.2.1, **13.4**
TIME
8
Time, Delays and Extensions of
3.2.4, 3.7.4, 5.2.3, 7.2.1, 7.3.1, 7.4, **8.3**, 9.5.1, 9.7, 10.3.2, 10.4, 14.3.2, 15.1.6, 15.2.5
Time Limits
2.1.2, 2.2, 2.5, 3.2.2, 3.10, 3.11, 3.12.5, 3.15.1, 4.2, 5.2, 5.3, 5.4, 6.2.4, 7.3, 7.4, 8.2, 9.2, 9.3.1, 9.3.3, 9.4.1, 9.5, 9.6, 9.7, 9.8, 9.9, 9.10, 12.2, 13.4, 14, 15.1.2, 15.1.3, 15.4
Time Limits on Claims
3.7.4, 10.2.8, 15.1.2, 15.1.3
Title to Work
9.3.2, 9.3.3
UNCOVERING AND CORRECTION OF WORK
12
Uncovering of Work
12.1
Unforeseen Conditions, Concealed or Unknown
3.7.4, 8.3.1, 10.3
Unit Prices
7.3.3.2, 9.1.2
Use of Documents
1.1.1, 1.5, 2.3.6, 3.12.6, 5.3
Use of Site
3.13, 6.1.1, 6.2.1
Values, Schedule of
9.2, 9.3.1
Waiver of Claims by the Architect
13.3.2
Waiver of Claims by the Contractor
9.10.5, 13.3.2, **15.1.7**
Waiver of Claims by the Owner
9.9.3, 9.10.3, 9.10.4, 12.2.2.1, 13.3.2, 14.2.4, **15.1.7**
Waiver of Consequential Damages
14.2.4, 15.1.7
Waiver of Liens
9.3, 9.10.2, 9.10.4
Waivers of Subrogation
6.1.1, **11.3**
Warranty
3.5, 4.2.9, 9.3.3, 9.8.4, 9.9.1, 9.10.2, 9.10.4, 12.2.2, 15.1.2
Weather Delays
8.3, 15.1.6.2
Work, Definition of
1.1.3
Written Consent
1.5.2, 3.4.2, 3.7.4, 3.12.8, 3.14.2, 4.1.2, 9.3.2, 9.10.3, 13.2, 13.3.2, 15.4.4.2
Written Interpretations
4.2.11, 4.2.12
Written Orders
1.1.1, 2.4, 3.9, 7, 8.2.2, 12.1, 12.2, 13.4.2, 14.3.1

AIA Document A201® – 2017. Copyright © 1911, 1915, 1918, 1925, 1937, 1951, 1958, 1961, 1963, 1966, 1970, 1976, 1987, 1997, 2007 and 2017 by The American Institute of Architects. All rights reserved. The "American Institute of Architects," "AIA," the AIA Logo, "A201," and "AIA Contract Documents" are registered trademarks and may not be used without permission. This document was produced by AIA software at 16:31:54 ET on 05/19/2022 under Order No.7850528272 which expires on 08/08/2022, is not for resale, is licensed for one-time use only, and may only be used in accordance with the AIA Contract Documents® Terms of Service. To report copyright violations, e-mail copyright@aia.org.
User Notes:
(1818773814)

ARTICLE 1 GENERAL PROVISIONS

§ 1.1 Basic Definitions

§ 1.1.1 The Contract Documents

The Contract Documents are enumerated in the Agreement between the Owner and Contractor (hereinafter the Agreement) and consist of the Agreement, Conditions of the Contract (General, Supplementary and other Conditions), Drawings, Specifications, Addenda issued prior to execution of the Contract, other documents listed in the Agreement, and Modifications issued after execution of the Contract. A Modification is (1) a written amendment to the Contract signed by both parties, (2) a Change Order, (3) a Construction Change Directive, or (4) a written order for a minor change in the Work issued by the Architect. Unless specifically enumerated in the Agreement, the Contract Documents do not include the advertisement or invitation to bid, Instructions to Bidders, sample forms, other information furnished by the Owner in anticipation of receiving bids or proposals, the Contractor's bid or proposal, or portions of Addenda relating to bidding or proposal requirements.

§ 1.1.2 The Contract

The Contract Documents form the Contract for Construction. The Contract represents the entire and integrated agreement between the parties hereto and supersedes prior negotiations, representations, or agreements, either written or oral. The Contract may be amended or modified only by a Modification. The Contract Documents shall not be construed to create a contractual relationship of any kind (1) between the Contractor and the Architect or the Architect's consultants, (2) between the Owner and a Subcontractor or a Sub-subcontractor, (3) between the Owner and the Architect or the Architect's consultants, or (4) between any persons or entities other than the Owner and the Contractor. The Architect shall, however, be entitled to performance and enforcement of obligations under the Contract intended to facilitate performance of the Architect's duties.

§ 1.1.3 The Work

The term "Work" means the construction and services required by the Contract Documents, whether completed or partially completed, and includes all other labor, materials, equipment, and services provided or to be provided by the Contractor to fulfill the Contractor's obligations. The Work may constitute the whole or a part of the Project.

§ 1.1.4 The Project

The Project is the total construction of which the Work performed under the Contract Documents may be the whole or a part and which may include construction by the Owner and by Separate Contractors.

§ 1.1.5 The Drawings

The Drawings are the graphic and pictorial portions of the Contract Documents showing the design, location and dimensions of the Work, generally including plans, elevations, sections, details, schedules, and diagrams.

§ 1.1.6 The Specifications

The Specifications are that portion of the Contract Documents consisting of the written requirements for materials, equipment, systems, standards and workmanship for the Work, and performance of related services.

§ 1.1.7 Instruments of Service

Instruments of Service are representations, in any medium of expression now known or later developed, of the tangible and intangible creative work performed by the Architect and the Architect's consultants under their respective professional services agreements. Instruments of Service may include, without limitation, studies, surveys, models, sketches, drawings, specifications, and other similar materials.

§ 1.1.8 Initial Decision Maker

The Initial Decision Maker is the person identified in the Agreement to render initial decisions on Claims in accordance with Section 15.2. The Initial Decision Maker shall not show partiality to the Owner or Contractor and shall not be liable for results of interpretations or decisions rendered in good faith.

§ 1.2 Correlation and Intent of the Contract Documents

§ 1.2.1 The intent of the Contract Documents is to include all items necessary for the proper execution and completion of the Work by the Contractor. The Contract Documents are complementary, and what is required by one shall be as binding as if required by all; performance by the Contractor shall be required only to the extent consistent with the Contract Documents and reasonably inferable from them as being necessary to produce the indicated results.

AIA Document A201® – 2017. Copyright © 1911, 1915, 1918, 1925, 1937, 1951, 1958, 1961, 1963, 1966, 1970, 1976, 1987, 1997, 2007 and 2017 by The American Institute of Architects. All rights reserved. The "American Institute of Architects," "AIA," the AIA Logo, "A201," and "AIA Contract Documents" are registered trademarks and may not be used without permission. This document was produced by AIA software at 16:31:54 ET on 05/19/2022 under Order No.7850528272 which expires on 08/08/2022, is not for resale, is licensed for one-time use only, and may only be used in accordance with the AIA Contract Documents® Terms of Service. To report copyright violations, e-mail copyright@aia.org.
User Notes:
(1818773814)

§ 1.2.1.1 The invalidity of any provision of the Contract Documents shall not invalidate the Contract or its remaining provisions. If it is determined that any provision of the Contract Documents violates any law, or is otherwise invalid or unenforceable, then that provision shall be revised to the extent necessary to make that provision legal and enforceable. In such case the Contract Documents shall be construed, to the fullest extent permitted by law, to give effect to the parties' intentions and purposes in executing the Contract.

§ 1.2.2 Organization of the Specifications into divisions, sections and articles, and arrangement of Drawings shall not control the Contractor in dividing the Work among Subcontractors or in establishing the extent of Work to be performed by any trade.

§ 1.2.3 Unless otherwise stated in the Contract Documents, words that have well-known technical or construction industry meanings are used in the Contract Documents in accordance with such recognized meanings.

§ 1.3 Capitalization

Terms capitalized in these General Conditions include those that are (1) specifically defined, (2) the titles of numbered articles, or (3) the titles of other documents published by the American Institute of Architects.

§ 1.4 Interpretation

In the interest of brevity the Contract Documents frequently omit modifying words such as "all" and "any" and articles such as "the" and "an," but the fact that a modifier or an article is absent from one statement and appears in another is not intended to affect the interpretation of either statement.

§ 1.5 Ownership and Use of Drawings, Specifications, and Other Instruments of Service

§ 1.5.1 The Architect and the Architect's consultants shall be deemed the authors and owners of their respective Instruments of Service, including the Drawings and Specifications, and retain all common law, statutory, and other reserved rights in their Instruments of Service, including copyrights. The Contractor, Subcontractors, Sub-subcontractors, and suppliers shall not own or claim a copyright in the Instruments of Service. Submittal or distribution to meet official regulatory requirements or for other purposes in connection with the Project is not to be construed as publication in derogation of the Architect's or Architect's consultants' reserved rights.

§ 1.5.2 The Contractor, Subcontractors, Sub-subcontractors, and suppliers are authorized to use and reproduce the Instruments of Service provided to them, subject to any protocols established pursuant to Sections 1.7 and 1.8, solely and exclusively for execution of the Work. All copies made under this authorization shall bear the copyright notice, if any, shown on the Instruments of Service. The Contractor, Subcontractors, Sub-subcontractors, and suppliers may not use the Instruments of Service on other projects or for additions to the Project outside the scope of the Work without the specific written consent of the Owner, Architect, and the Architect's consultants.

§ 1.6 Notice

§ 1.6.1 Except as otherwise provided in Section 1.6.2, where the Contract Documents require one party to notify or give notice to the other party, such notice shall be provided in writing to the designated representative of the party to whom the notice is addressed and shall be deemed to have been duly served if delivered in person, by mail, by courier, or by electronic transmission if a method for electronic transmission is set forth in the Agreement.

§ 1.6.2 Notice of Claims as provided in Section 15.1.3 shall be provided in writing and shall be deemed to have been duly served only if delivered to the designated representative of the party to whom the notice is addressed by certified or registered mail, or by courier providing proof of delivery.

§ 1.7 Digital Data Use and Transmission

The parties shall agree upon protocols governing the transmission and use of Instruments of Service or any other information or documentation in digital form. The parties will use AIA Document E203™–2013, Building Information Modeling and Digital Data Exhibit, to establish the protocols for the development, use, transmission, and exchange of digital data.

§ 1.8 Building Information Models Use and Reliance

Any use of, or reliance on, all or a portion of a building information model without agreement to protocols governing the use of, and reliance on, the information contained in the model and without having those protocols set forth in AIA Document E203™–2013, Building Information Modeling and Digital Data Exhibit, and the requisite AIA Document

AIA Document A201® – 2017. Copyright © 1911, 1915, 1918, 1925, 1937, 1951, 1958, 1961, 1963, 1966, 1970, 1976, 1987, 1997, 2007 and 2017 by The American Institute of Architects. All rights reserved. The "American Institute of Architects," "AIA," the AIA Logo, "A201," and "AIA Contract Documents" are registered trademarks and may not be used without permission. This document was produced by AIA software at 16:31:54 ET on 05/19/2022 under Order No.7850528272 which expires on 08/08/2022, is not for resale, is licensed for one-time use only, and may only be used in accordance with the AIA Contract Documents® Terms of Service. To report copyright violations, e-mail copyright@aia.org.
User Notes:
(1818773814)

G202™–2013, Project Building Information Modeling Protocol Form, shall be at the using or relying party's sole risk and without liability to the other party and its contractors or consultants, the authors of, or contributors to, the building information model, and each of their agents and employees.

ARTICLE 2 OWNER

§ 2.1 General

§ 2.1.1 The Owner is the person or entity identified as such in the Agreement and is referred to throughout the Contract Documents as if singular in number. The Owner shall designate in writing a representative who shall have express authority to bind the Owner with respect to all matters requiring the Owner's approval or authorization. Except as otherwise provided in Section 4.2.1, the Architect does not have such authority. The term "Owner" means the Owner or the Owner's authorized representative.

§ 2.1.2 The Owner shall furnish to the Contractor, within fifteen days after receipt of a written request, information necessary and relevant for the Contractor to evaluate, give notice of, or enforce mechanic's lien rights. Such information shall include a correct statement of the record legal title to the property on which the Project is located, usually referred to as the site, and the Owner's interest therein.

§ 2.2 Evidence of the Owner's Financial Arrangements

§ 2.2.1 Prior to commencement of the Work and upon written request by the Contractor, the Owner shall furnish to the Contractor reasonable evidence that the Owner has made financial arrangements to fulfill the Owner's obligations under the Contract. The Contractor shall have no obligation to commence the Work until the Owner provides such evidence. If commencement of the Work is delayed under this Section 2.2.1, the Contract Time shall be extended appropriately.

§ 2.2.2 Following commencement of the Work and upon written request by the Contractor, the Owner shall furnish to the Contractor reasonable evidence that the Owner has made financial arrangements to fulfill the Owner's obligations under the Contract only if (1) the Owner fails to make payments to the Contractor as the Contract Documents require; (2) the Contractor identifies in writing a reasonable concern regarding the Owner's ability to make payment when due; or (3) a change in the Work materially changes the Contract Sum. If the Owner fails to provide such evidence, as required, within fourteen days of the Contractor's request, the Contractor may immediately stop the Work and, in that event, shall notify the Owner that the Work has stopped. However, if the request is made because a change in the Work materially changes the Contract Sum under (3) above, the Contractor may immediately stop only that portion of the Work affected by the change until reasonable evidence is provided. If the Work is stopped under this Section 2.2.2, the Contract Time shall be extended appropriately and the Contract Sum shall be increased by the amount of the Contractor's reasonable costs of shutdown, delay and start-up, plus interest as provided in the Contract Documents.

§ 2.2.3 After the Owner furnishes evidence of financial arrangements under this Section 2.2, the Owner shall not materially vary such financial arrangements without prior notice to the Contractor.

§ 2.2.4 Where the Owner has designated information furnished under this Section 2.2 as "confidential," the Contractor shall keep the information confidential and shall not disclose it to any other person. However, the Contractor may disclose "confidential" information, after seven (7) days' notice to the Owner, where disclosure is required by law, including a subpoena or other form of compulsory legal process issued by a court or governmental entity, or by court or arbitrator(s) order. The Contractor may also disclose "confidential" information to its employees, consultants, sureties, Subcontractors and their employees, Sub-subcontractors, and others who need to know the content of such information solely and exclusively for the Project and who agree to maintain the confidentiality of such information.

§ 2.3 Information and Services Required of the Owner

§ 2.3.1 Except for permits and fees that are the responsibility of the Contractor under the Contract Documents, including those required under Section 3.7.1, the Owner shall secure and pay for necessary approvals, easements, assessments and charges required for construction, use or occupancy of permanent structures or for permanent changes in existing facilities.

§ 2.3.2 The Owner shall retain an architect lawfully licensed to practice architecture, or an entity lawfully practicing architecture, in the jurisdiction where the Project is located. That person or entity is identified as the Architect in the Agreement and is referred to throughout the Contract Documents as if singular in number.

AIA Document A201® – 2017. Copyright © 1911, 1915, 1918, 1925, 1937, 1951, 1958, 1961, 1963, 1966, 1970, 1976, 1987, 1997, 2007 and 2017 by The American Institute of Architects. All rights reserved. The "American Institute of Architects," "AIA," the AIA Logo, "A201," and "AIA Contract Documents" are registered trademarks and may not be used without permission. This document was produced by AIA software at 16:31:54 ET on 05/19/2022 under Order No.7850528272 which expires on 08/08/2022, is not for resale, is licensed for one-time use only, and may only be used in accordance with the AIA Contract Documents® Terms of Service. To report copyright violations, e-mail copyright@aia.org.
User Notes:
(1818773814)

§ 2.3.3 If the employment of the Architect terminates, the Owner shall employ a successor to whom the Contractor has no reasonable objection and whose status under the Contract Documents shall be that of the Architect.

§ 2.3.4 The Owner shall furnish surveys describing physical characteristics, legal limitations and utility locations for the site of the Project, and a legal description of the site. The Contractor shall be entitled to rely on the accuracy of information furnished by the Owner but shall exercise proper precautions relating to the safe performance of the Work.

§ 2.3.5 The Owner shall furnish information or services required of the Owner by the Contract Documents with reasonable promptness. The Owner shall also furnish any other information or services under the Owner's control and relevant to the Contractor's performance of the Work with reasonable promptness after receiving the Contractor's written request for such information or services.

§ 2.3.6 Unless otherwise provided in the Contract Documents, the Owner shall furnish to the Contractor one copy of the Contract Documents for purposes of making reproductions pursuant to Section 1.5.2.

§ 2.4 Owner's Right to Stop the Work

If the Contractor fails to correct Work that is not in accordance with the requirements of the Contract Documents as required by Section 12.2 or repeatedly fails to carry out Work in accordance with the Contract Documents, the Owner may issue a written order to the Contractor to stop the Work, or any portion thereof, until the cause for such order has been eliminated; however, the right of the Owner to stop the Work shall not give rise to a duty on the part of the Owner to exercise this right for the benefit of the Contractor or any other person or entity, except to the extent required by Section 6.1.3.

§ 2.5 Owner's Right to Carry Out the Work

If the Contractor defaults or neglects to carry out the Work in accordance with the Contract Documents and fails within a ten-day period after receipt of notice from the Owner to commence and continue correction of such default or neglect with diligence and promptness, the Owner may, without prejudice to other remedies the Owner may have, correct such default or neglect. Such action by the Owner and amounts charged to the Contractor are both subject to prior approval of the Architect and the Architect may, pursuant to Section 9.5.1, withhold or nullify a Certificate for Payment in whole or in part, to the extent reasonably necessary to reimburse the Owner for the reasonable cost of correcting such deficiencies, including Owner's expenses and compensation for the Architect's additional services made necessary by such default, neglect, or failure. If current and future payments are not sufficient to cover such amounts, the Contractor shall pay the difference to the Owner. If the Contractor disagrees with the actions of the Owner or the Architect, or the amounts claimed as costs to the Owner, the Contractor may file a Claim pursuant to Article 15.

ARTICLE 3 CONTRACTOR

§ 3.1 General

§ 3.1.1 The Contractor is the person or entity identified as such in the Agreement and is referred to throughout the Contract Documents as if singular in number. The Contractor shall be lawfully licensed, if required in the jurisdiction where the Project is located. The Contractor shall designate in writing a representative who shall have express authority to bind the Contractor with respect to all matters under this Contract. The term "Contractor" means the Contractor or the Contractor's authorized representative.

§ 3.1.2 The Contractor shall perform the Work in accordance with the Contract Documents.

§ 3.1.3 The Contractor shall not be relieved of its obligations to perform the Work in accordance with the Contract Documents either by activities or duties of the Architect in the Architect's administration of the Contract, or by tests, inspections or approvals required or performed by persons or entities other than the Contractor.

§ 3.2 Review of Contract Documents and Field Conditions by Contractor

§ 3.2.1 Execution of the Contract by the Contractor is a representation that the Contractor has visited the site, become generally familiar with local conditions under which the Work is to be performed, and correlated personal observations with requirements of the Contract Documents.

AIA Document A201® – 2017. Copyright © 1911, 1915, 1918, 1925, 1937, 1951, 1958, 1961, 1963, 1966, 1970, 1976, 1987, 1997, 2007 and 2017 by The American Institute of Architects. All rights reserved. The "American Institute of Architects," "AIA," the AIA Logo, "A201," and "AIA Contract Documents" are registered trademarks and may not be used without permission. This document was produced by AIA software at 16:31:54 ET on 05/19/2022 under Order No.7850528272 which expires on 08/08/2022, is not for resale, is licensed for one-time use only, and may only be used in accordance with the AIA Contract Documents® Terms of Service. To report copyright violations, e-mail copyright@aia.org.
User Notes:
(1818773814)

§ 3.2.2 Because the Contract Documents are complementary, the Contractor shall, before starting each portion of the Work, carefully study and compare the various Contract Documents relative to that portion of the Work, as well as the information furnished by the Owner pursuant to Section 2.3.4, shall take field measurements of any existing conditions related to that portion of the Work, and shall observe any conditions at the site affecting it. These obligations are for the purpose of facilitating coordination and construction by the Contractor and are not for the purpose of discovering errors, omissions, or inconsistencies in the Contract Documents; however, the Contractor shall promptly report to the Architect any errors, inconsistencies or omissions discovered by or made known to the Contractor as a request for information in such form as the Architect may require. It is recognized that the Contractor's review is made in the Contractor's capacity as a contractor and not as a licensed design professional, unless otherwise specifically provided in the Contract Documents.

§ 3.2.3 The Contractor is not required to ascertain that the Contract Documents are in accordance with applicable laws, statutes, ordinances, codes, rules and regulations, or lawful orders of public authorities, but the Contractor shall promptly report to the Architect any nonconformity discovered by or made known to the Contractor as a request for information in such form as the Architect may require.

§ 3.2.4 If the Contractor believes that additional cost or time is involved because of clarifications or instructions the Architect issues in response to the Contractor's notices or requests for information pursuant to Sections 3.2.2 or 3.2.3, the Contractor shall submit Claims as provided in Article 15. If the Contractor fails to perform the obligations of Sections 3.2.2 or 3.2.3, the Contractor shall pay such costs and damages to the Owner, subject to Section 15.1.7, as would have been avoided if the Contractor had performed such obligations. If the Contractor performs those obligations, the Contractor shall not be liable to the Owner or Architect for damages resulting from errors, inconsistencies or omissions in the Contract Documents, for differences between field measurements or conditions and the Contract Documents, or for nonconformities of the Contract Documents to applicable laws, statutes, ordinances, codes, rules and regulations, and lawful orders of public authorities.

§ 3.3 Supervision and Construction Procedures

§ 3.3.1 The Contractor shall supervise and direct the Work, using the Contractor's best skill and attention. The Contractor shall be solely responsible for, and have control over, construction means, methods, techniques, sequences, and procedures, and for coordinating all portions of the Work under the Contract. If the Contract Documents give specific instructions concerning construction means, methods, techniques, sequences, or procedures, the Contractor shall evaluate the jobsite safety thereof and shall be solely responsible for the jobsite safety of such means, methods, techniques, sequences, or procedures. If the Contractor determines that such means, methods, techniques, sequences or procedures may not be safe, the Contractor shall give timely notice to the Owner and Architect, and shall propose alternative means, methods, techniques, sequences, or procedures. The Architect shall evaluate the proposed alternative solely for conformance with the design intent for the completed construction. Unless the Architect objects to the Contractor's proposed alternative, the Contractor shall perform the Work using its alternative means, methods, techniques, sequences, or procedures.

§ 3.3.2 The Contractor shall be responsible to the Owner for acts and omissions of the Contractor's employees, Subcontractors and their agents and employees, and other persons or entities performing portions of the Work for, or on behalf of, the Contractor or any of its Subcontractors.

§ 3.3.3 The Contractor shall be responsible for inspection of portions of Work already performed to determine that such portions are in proper condition to receive subsequent Work.

§ 3.4 Labor and Materials

§ 3.4.1 Unless otherwise provided in the Contract Documents, the Contractor shall provide and pay for labor, materials, equipment, tools, construction equipment and machinery, water, heat, utilities, transportation, and other facilities and services necessary for proper execution and completion of the Work, whether temporary or permanent and whether or not incorporated or to be incorporated in the Work.

§ 3.4.2 Except in the case of minor changes in the Work approved by the Architect in accordance with Section 3.12.8 or ordered by the Architect in accordance with Section 7.4, the Contractor may make substitutions only with the consent of the Owner, after evaluation by the Architect and in accordance with a Change Order or Construction Change Directive.

AIA Document A201® – 2017. Copyright © 1911, 1915, 1918, 1925, 1937, 1951, 1958, 1961, 1963, 1966, 1970, 1976, 1987, 1997, 2007 and 2017 by The American Institute of Architects. All rights reserved. The "American Institute of Architects," "AIA," the AIA Logo, "A201," and "AIA Contract Documents" are registered trademarks and may not be used without permission. This document was produced by AIA software at 16:31:54 ET on 05/19/2022 under Order No.7850528272 which expires on 08/08/2022, is not for resale, is licensed for one-time use only, and may only be used in accordance with the AIA Contract Documents® Terms of Service. To report copyright violations, e-mail copyright@aia.org.
User Notes:

§ 3.4.3 The Contractor shall enforce strict discipline and good order among the Contractor's employees and other persons carrying out the Work. The Contractor shall not permit employment of unfit persons or persons not properly skilled in tasks assigned to them.

§ 3.5 Warranty

§ 3.5.1 The Contractor warrants to the Owner and Architect that materials and equipment furnished under the Contract will be of good quality and new unless the Contract Documents require or permit otherwise. The Contractor further warrants that the Work will conform to the requirements of the Contract Documents and will be free from defects, except for those inherent in the quality of the Work the Contract Documents require or permit. Work, materials, or equipment not conforming to these requirements may be considered defective. The Contractor's warranty excludes remedy for damage or defect caused by abuse, alterations to the Work not executed by the Contractor, improper or insufficient maintenance, improper operation, or normal wear and tear and normal usage. If required by the Architect, the Contractor shall furnish satisfactory evidence as to the kind and quality of materials and equipment.

§ 3.5.2 All material, equipment, or other special warranties required by the Contract Documents shall be issued in the name of the Owner, or shall be transferable to the Owner, and shall commence in accordance with Section 9.8.4.

§ 3.6 Taxes

The Contractor shall pay sales, consumer, use and similar taxes for the Work provided by the Contractor that are legally enacted when bids are received or negotiations concluded, whether or not yet effective or merely scheduled to go into effect.

§ 3.7 Permits, Fees, Notices and Compliance with Laws

§ 3.7.1 Unless otherwise provided in the Contract Documents, the Contractor shall secure and pay for the building permit as well as for other permits, fees, licenses, and inspections by government agencies necessary for proper execution and completion of the Work that are customarily secured after execution of the Contract and legally required at the time bids are received or negotiations concluded.

§ 3.7.2 The Contractor shall comply with and give notices required by applicable laws, statutes, ordinances, codes, rules and regulations, and lawful orders of public authorities applicable to performance of the Work.

§ 3.7.3 If the Contractor performs Work knowing it to be contrary to applicable laws, statutes, ordinances, codes, rules and regulations, or lawful orders of public authorities, the Contractor shall assume appropriate responsibility for such Work and shall bear the costs attributable to correction.

§ 3.7.4 Concealed or Unknown Conditions

If the Contractor encounters conditions at the site that are (1) subsurface or otherwise concealed physical conditions that differ materially from those indicated in the Contract Documents or (2) unknown physical conditions of an unusual nature that differ materially from those ordinarily found to exist and generally recognized as inherent in construction activities of the character provided for in the Contract Documents, the Contractor shall promptly provide notice to the Owner and the Architect before conditions are disturbed and in no event later than 14 days after first observance of the conditions. The Architect will promptly investigate such conditions and, if the Architect determines that they differ materially and cause an increase or decrease in the Contractor's cost of, or time required for, performance of any part of the Work, will recommend that an equitable adjustment be made in the Contract Sum or Contract Time, or both. If the Architect determines that the conditions at the site are not materially different from those indicated in the Contract Documents and that no change in the terms of the Contract is justified, the Architect shall promptly notify the Owner and Contractor, stating the reasons. If either party disputes the Architect's determination or recommendation, that party may submit a Claim as provided in Article 15.

§ 3.7.5 If, in the course of the Work, the Contractor encounters human remains or recognizes the existence of burial markers, archaeological sites or wetlands not indicated in the Contract Documents, the Contractor shall immediately suspend any operations that would affect them and shall notify the Owner and Architect. Upon receipt of such notice, the Owner shall promptly take any action necessary to obtain governmental authorization required to resume the operations. The Contractor shall continue to suspend such operations until otherwise instructed by the Owner but shall continue with all other operations that do not affect those remains or features. Requests for adjustments in the Contract Sum and Contract Time arising from the existence of such remains or features may be made as provided in Article 15.

AIA Document A201® – 2017. Copyright © 1911, 1915, 1918, 1925, 1937, 1951, 1958, 1961, 1963, 1966, 1970, 1976, 1987, 1997, 2007 and 2017 by The American Institute of Architects. All rights reserved. The "American Institute of Architects," "AIA," the AIA Logo, "A201," and "AIA Contract Documents" are registered trademarks and may not be used without permission. This document was produced by AIA software at 16:31:54 ET on 05/19/2022 under Order No.7850528272 which expires on 08/08/2022, is not for resale, is licensed for one-time use only, and may only be used in accordance with the AIA Contract Documents® Terms of Service. To report copyright violations, e-mail copyright@aia.org.
User Notes: (1818773814)

§ 3.8 Allowances

§ 3.8.1 The Contractor shall include in the Contract Sum all allowances stated in the Contract Documents. Items covered by allowances shall be supplied for such amounts and by such persons or entities as the Owner may direct, but the Contractor shall not be required to employ persons or entities to whom the Contractor has reasonable objection.

§ 3.8.2 Unless otherwise provided in the Contract Documents,

- **.1** allowances shall cover the cost to the Contractor of materials and equipment delivered at the site and all required taxes, less applicable trade discounts;
- **.2** Contractor's costs for unloading and handling at the site, labor, installation costs, overhead, profit, and other expenses contemplated for stated allowance amounts shall be included in the Contract Sum but not in the allowances; and
- **.3** whenever costs are more than or less than allowances, the Contract Sum shall be adjusted accordingly by Change Order. The amount of the Change Order shall reflect (1) the difference between actual costs and the allowances under Section 3.8.2.1 and (2) changes in Contractor's costs under Section 3.8.2.2.

§ 3.8.3 Materials and equipment under an allowance shall be selected by the Owner with reasonable promptness.

§ 3.9 Superintendent

§ 3.9.1 The Contractor shall employ a competent superintendent and necessary assistants who shall be in attendance at the Project site during performance of the Work. The superintendent shall represent the Contractor, and communications given to the superintendent shall be as binding as if given to the Contractor.

§ 3.9.2 The Contractor, as soon as practicable after award of the Contract, shall notify the Owner and Architect of the name and qualifications of a proposed superintendent. Within 14 days of receipt of the information, the Architect may notify the Contractor, stating whether the Owner or the Architect (1) has reasonable objection to the proposed superintendent or (2) requires additional time for review. Failure of the Architect to provide notice within the 14-day period shall constitute notice of no reasonable objection.

§ 3.9.3 The Contractor shall not employ a proposed superintendent to whom the Owner or Architect has made reasonable and timely objection. The Contractor shall not change the superintendent without the Owner's consent, which shall not unreasonably be withheld or delayed.

§ 3.10 Contractor's Construction and Submittal Schedules

§ 3.10.1 The Contractor, promptly after being awarded the Contract, shall submit for the Owner's and Architect's information a Contractor's construction schedule for the Work. The schedule shall contain detail appropriate for the Project, including (1) the date of commencement of the Work, interim schedule milestone dates, and the date of Substantial Completion; (2) an apportionment of the Work by construction activity; and (3) the time required for completion of each portion of the Work. The schedule shall provide for the orderly progression of the Work to completion and shall not exceed time limits current under the Contract Documents. The schedule shall be revised at appropriate intervals as required by the conditions of the Work and Project.

§ 3.10.2 The Contractor, promptly after being awarded the Contract and thereafter as necessary to maintain a current submittal schedule, shall submit a submittal schedule for the Architect's approval. The Architect's approval shall not be unreasonably delayed or withheld. The submittal schedule shall (1) be coordinated with the Contractor's construction schedule, and (2) allow the Architect reasonable time to review submittals. If the Contractor fails to submit a submittal schedule, or fails to provide submittals in accordance with the approved submittal schedule, the Contractor shall not be entitled to any increase in Contract Sum or extension of Contract Time based on the time required for review of submittals.

§ 3.10.3 The Contractor shall perform the Work in general accordance with the most recent schedules submitted to the Owner and Architect.

§ 3.11 Documents and Samples at the Site

The Contractor shall make available, at the Project site, the Contract Documents, including Change Orders, Construction Change Directives, and other Modifications, in good order and marked currently to indicate field changes and selections made during construction, and the approved Shop Drawings, Product Data, Samples, and similar required submittals. These shall be in electronic form or paper copy, available to the Architect and Owner, and

AIA Document A201® – 2017. Copyright © 1911, 1915, 1918, 1925, 1937, 1951, 1958, 1961, 1963, 1966, 1970, 1976, 1987, 1997, 2007 and 2017 by The American Institute of Architects. All rights reserved. The "American Institute of Architects," "AIA," the AIA Logo, "A201," and "AIA Contract Documents" are registered trademarks and may not be used without permission. This document was produced by AIA software at 16:31:54 ET on 05/19/2022 under Order No.7850528272 which expires on 08/08/2022, is not for resale, is licensed for one-time use only, and may only be used in accordance with the AIA Contract Documents® Terms of Service. To report copyright violations, e-mail copyright@aia.org.
User Notes:
(1818773814)

delivered to the Architect for submittal to the Owner upon completion of the Work as a record of the Work as constructed.

§ 3.12 Shop Drawings, Product Data and Samples

§ 3.12.1 Shop Drawings are drawings, diagrams, schedules, and other data specially prepared for the Work by the Contractor or a Subcontractor, Sub-subcontractor, manufacturer, supplier, or distributor to illustrate some portion of the Work.

§ 3.12.2 Product Data are illustrations, standard schedules, performance charts, instructions, brochures, diagrams, and other information furnished by the Contractor to illustrate materials or equipment for some portion of the Work.

§ 3.12.3 Samples are physical examples that illustrate materials, equipment, or workmanship, and establish standards by which the Work will be judged.

§ 3.12.4 Shop Drawings, Product Data, Samples, and similar submittals are not Contract Documents. Their purpose is to demonstrate how the Contractor proposes to conform to the information given and the design concept expressed in the Contract Documents for those portions of the Work for which the Contract Documents require submittals. Review by the Architect is subject to the limitations of Section 4.2.7. Informational submittals upon which the Architect is not expected to take responsive action may be so identified in the Contract Documents. Submittals that are not required by the Contract Documents may be returned by the Architect without action.

§ 3.12.5 The Contractor shall review for compliance with the Contract Documents, approve, and submit to the Architect, Shop Drawings, Product Data, Samples, and similar submittals required by the Contract Documents, in accordance with the submittal schedule approved by the Architect or, in the absence of an approved submittal schedule, with reasonable promptness and in such sequence as to cause no delay in the Work or in the activities of the Owner or of Separate Contractors.

§ 3.12.6 By submitting Shop Drawings, Product Data, Samples, and similar submittals, the Contractor represents to the Owner and Architect that the Contractor has (1) reviewed and approved them, (2) determined and verified materials, field measurements and field construction criteria related thereto, or will do so, and (3) checked and coordinated the information contained within such submittals with the requirements of the Work and of the Contract Documents.

§ 3.12.7 The Contractor shall perform no portion of the Work for which the Contract Documents require submittal and review of Shop Drawings, Product Data, Samples, or similar submittals, until the respective submittal has been approved by the Architect.

§ 3.12.8 The Work shall be in accordance with approved submittals except that the Contractor shall not be relieved of responsibility for deviations from the requirements of the Contract Documents by the Architect's approval of Shop Drawings, Product Data, Samples, or similar submittals, unless the Contractor has specifically notified the Architect of such deviation at the time of submittal and (1) the Architect has given written approval to the specific deviation as a minor change in the Work, or (2) a Change Order or Construction Change Directive has been issued authorizing the deviation. The Contractor shall not be relieved of responsibility for errors or omissions in Shop Drawings, Product Data, Samples, or similar submittals, by the Architect's approval thereof.

§ 3.12.9 The Contractor shall direct specific attention, in writing or on resubmitted Shop Drawings, Product Data, Samples, or similar submittals, to revisions other than those requested by the Architect on previous submittals. In the absence of such notice, the Architect's approval of a resubmission shall not apply to such revisions.

§ 3.12.10 The Contractor shall not be required to provide professional services that constitute the practice of architecture or engineering unless such services are specifically required by the Contract Documents for a portion of the Work or unless the Contractor needs to provide such services in order to carry out the Contractor's responsibilities for construction means, methods, techniques, sequences, and procedures. The Contractor shall not be required to provide professional services in violation of applicable law.

§ 3.12.10.1 If professional design services or certifications by a design professional related to systems, materials, or equipment are specifically required of the Contractor by the Contract Documents, the Owner and the Architect will

AIA Document A201® – 2017. Copyright © 1911, 1915, 1918, 1925, 1937, 1951, 1958, 1961, 1963, 1966, 1970, 1976, 1987, 1997, 2007 and 2017 by The American Institute of Architects. All rights reserved. The "American Institute of Architects," "AIA," the AIA Logo, "A201," and "AIA Contract Documents" are registered trademarks and may not be used without permission. This document was produced by AIA software at 16:31:54 ET on 05/19/2022 under Order No.7850528272 which expires on 08/08/2022, is not for resale, is licensed for one-time use only, and may only be used in accordance with the AIA Contract Documents® Terms of Service. To report copyright violations, e-mail copyright@aia.org.
User Notes: (1818773814)

specify all performance and design criteria that such services must satisfy. The Contractor shall be entitled to rely upon the adequacy and accuracy of the performance and design criteria provided in the Contract Documents. The Contractor shall cause such services or certifications to be provided by an appropriately licensed design professional, whose signature and seal shall appear on all drawings, calculations, specifications, certifications, Shop Drawings, and other submittals prepared by such professional. Shop Drawings, and other submittals related to the Work, designed or certified by such professional, if prepared by others, shall bear such professional's written approval when submitted to the Architect. The Owner and the Architect shall be entitled to rely upon the adequacy and accuracy of the services, certifications, and approvals performed or provided by such design professionals, provided the Owner and Architect have specified to the Contractor the performance and design criteria that such services must satisfy. Pursuant to this Section 3.12.10, the Architect will review and approve or take other appropriate action on submittals only for the limited purpose of checking for conformance with information given and the design concept expressed in the Contract Documents.

§ 3.12.10.2 If the Contract Documents require the Contractor's design professional to certify that the Work has been performed in accordance with the design criteria, the Contractor shall furnish such certifications to the Architect at the time and in the form specified by the Architect.

§ 3.13 Use of Site

The Contractor shall confine operations at the site to areas permitted by applicable laws, statutes, ordinances, codes, rules and regulations, lawful orders of public authorities, and the Contract Documents and shall not unreasonably encumber the site with materials or equipment.

§ 3.14 Cutting and Patching

§ 3.14.1 The Contractor shall be responsible for cutting, fitting, or patching required to complete the Work or to make its parts fit together properly. All areas requiring cutting, fitting, or patching shall be restored to the condition existing prior to the cutting, fitting, or patching, unless otherwise required by the Contract Documents.

§ 3.14.2 The Contractor shall not damage or endanger a portion of the Work or fully or partially completed construction of the Owner or Separate Contractors by cutting, patching, or otherwise altering such construction, or by excavation. The Contractor shall not cut or otherwise alter construction by the Owner or a Separate Contractor except with written consent of the Owner and of the Separate Contractor. Consent shall not be unreasonably withheld. The Contractor shall not unreasonably withhold, from the Owner or a Separate Contractor, its consent to cutting or otherwise altering the Work.

§ 3.15 Cleaning Up

§ 3.15.1 The Contractor shall keep the premises and surrounding area free from accumulation of waste materials and rubbish caused by operations under the Contract. At completion of the Work, the Contractor shall remove waste materials, rubbish, the Contractor's tools, construction equipment, machinery, and surplus materials from and about the Project.

§ 3.15.2 If the Contractor fails to clean up as provided in the Contract Documents, the Owner may do so and the Owner shall be entitled to reimbursement from the Contractor.

§ 3.16 Access to Work

The Contractor shall provide the Owner and Architect with access to the Work in preparation and progress wherever located.

§ 3.17 Royalties, Patents and Copyrights

The Contractor shall pay all royalties and license fees. The Contractor shall defend suits or claims for infringement of copyrights and patent rights and shall hold the Owner and Architect harmless from loss on account thereof, but shall not be responsible for defense or loss when a particular design, process, or product of a particular manufacturer or manufacturers is required by the Contract Documents, or where the copyright violations are contained in Drawings, Specifications, or other documents prepared by the Owner or Architect. However, if an infringement of a copyright or patent is discovered by, or made known to, the Contractor, the Contractor shall be responsible for the loss unless the information is promptly furnished to the Architect.

AIA Document A201® – 2017. Copyright © 1911, 1915, 1918, 1925, 1937, 1951, 1958, 1961, 1963, 1966, 1970, 1976, 1987, 1997, 2007 and 2017 by The American Institute of Architects. All rights reserved. The "American Institute of Architects," "AIA," the AIA Logo, "A201," and "AIA Contract Documents" are registered trademarks and may not be used without permission. This document was produced by AIA software at 16:31:54 ET on 05/19/2022 under Order No.7850528272 which expires on 08/08/2022, is not for resale, is licensed for one-time use only, and may only be used in accordance with the AIA Contract Documents® Terms of Service. To report copyright violations, e-mail copyright@aia.org.
User Notes: (1818773814)

§ 3.18 Indemnification

§ 3.18.1 To the fullest extent permitted by law, the Contractor shall indemnify and hold harmless the Owner, Architect, Architect's consultants, and agents and employees of any of them from and against claims, damages, losses, and expenses, including but not limited to attorneys' fees, arising out of or resulting from performance of the Work, provided that such claim, damage, loss, or expense is attributable to bodily injury, sickness, disease or death, or to injury to or destruction of tangible property (other than the Work itself), but only to the extent caused by the negligent acts or omissions of the Contractor, a Subcontractor, anyone directly or indirectly employed by them, or anyone for whose acts they may be liable, regardless of whether or not such claim, damage, loss, or expense is caused in part by a party indemnified hereunder. Such obligation shall not be construed to negate, abridge, or reduce other rights or obligations of indemnity that would otherwise exist as to a party or person described in this Section 3.18.

§ 3.18.2 In claims against any person or entity indemnified under this Section 3.18 by an employee of the Contractor, a Subcontractor, anyone directly or indirectly employed by them, or anyone for whose acts they may be liable, the indemnification obligation under Section 3.18.1 shall not be limited by a limitation on amount or type of damages, compensation, or benefits payable by or for the Contractor or a Subcontractor under workers' compensation acts, disability benefit acts, or other employee benefit acts.

ARTICLE 4 ARCHITECT

§ 4.1 General

§ 4.1.1 The Architect is the person or entity retained by the Owner pursuant to Section 2.3.2 and identified as such in the Agreement.

§ 4.1.2 Duties, responsibilities, and limitations of authority of the Architect as set forth in the Contract Documents shall not be restricted, modified, or extended without written consent of the Owner, Contractor, and Architect. Consent shall not be unreasonably withheld.

§ 4.2 Administration of the Contract

§ 4.2.1 The Architect will provide administration of the Contract as described in the Contract Documents and will be an Owner's representative during construction until the date the Architect issues the final Certificate for Payment. The Architect will have authority to act on behalf of the Owner only to the extent provided in the Contract Documents.

§ 4.2.2 The Architect will visit the site at intervals appropriate to the stage of construction, or as otherwise agreed with the Owner, to become generally familiar with the progress and quality of the portion of the Work completed, and to determine in general if the Work observed is being performed in a manner indicating that the Work, when fully completed, will be in accordance with the Contract Documents. However, the Architect will not be required to make exhaustive or continuous on-site inspections to check the quality or quantity of the Work. The Architect will not have control over, charge of, or responsibility for the construction means, methods, techniques, sequences or procedures, or for the safety precautions and programs in connection with the Work, since these are solely the Contractor's rights and responsibilities under the Contract Documents.

§ 4.2.3 On the basis of the site visits, the Architect will keep the Owner reasonably informed about the progress and quality of the portion of the Work completed, and promptly report to the Owner (1) known deviations from the Contract Documents, (2) known deviations from the most recent construction schedule submitted by the Contractor, and (3) defects and deficiencies observed in the Work. The Architect will not be responsible for the Contractor's failure to perform the Work in accordance with the requirements of the Contract Documents. The Architect will not have control over or charge of, and will not be responsible for acts or omissions of, the Contractor, Subcontractors, or their agents or employees, or any other persons or entities performing portions of the Work.

§ 4.2.4 Communications

The Owner and Contractor shall include the Architect in all communications that relate to or affect the Architect's services or professional responsibilities. The Owner shall promptly notify the Architect of the substance of any direct communications between the Owner and the Contractor otherwise relating to the Project. Communications by and with the Architect's consultants shall be through the Architect. Communications by and with Subcontractors and suppliers shall be through the Contractor. Communications by and with Separate Contractors shall be through the Owner. The Contract Documents may specify other communication protocols.

AIA Document A201® – 2017. Copyright © 1911, 1915, 1918, 1925, 1937, 1951, 1958, 1961, 1963, 1966, 1970, 1976, 1987, 1997, 2007 and 2017 by The American Institute of Architects. All rights reserved. The "American Institute of Architects," "AIA," the AIA Logo, "A201," and "AIA Contract Documents" are registered trademarks and may not be used without permission. This document was produced by AIA software at 16:31:54 ET on 05/19/2022 under Order No.7850528272 which expires on 08/08/2022, is not for resale, is licensed for one-time use only, and may only be used in accordance with the AIA Contract Documents® Terms of Service. To report copyright violations, e-mail copyright@aia.org.
User Notes: (1818773814)

§ 4.2.5 Based on the Architect's evaluations of the Contractor's Applications for Payment, the Architect will review and certify the amounts due the Contractor and will issue Certificates for Payment in such amounts.

§ 4.2.6 The Architect has authority to reject Work that does not conform to the Contract Documents. Whenever the Architect considers it necessary or advisable, the Architect will have authority to require inspection or testing of the Work in accordance with Sections 13.4.2 and 13.4.3, whether or not the Work is fabricated, installed or completed. However, neither this authority of the Architect nor a decision made in good faith either to exercise or not to exercise such authority shall give rise to a duty or responsibility of the Architect to the Contractor, Subcontractors, suppliers, their agents or employees, or other persons or entities performing portions of the Work.

§ 4.2.7 The Architect will review and approve, or take other appropriate action upon, the Contractor's submittals such as Shop Drawings, Product Data, and Samples, but only for the limited purpose of checking for conformance with information given and the design concept expressed in the Contract Documents. The Architect's action will be taken in accordance with the submittal schedule approved by the Architect or, in the absence of an approved submittal schedule, with reasonable promptness while allowing sufficient time in the Architect's professional judgment to permit adequate review. Review of such submittals is not conducted for the purpose of determining the accuracy and completeness of other details such as dimensions and quantities, or for substantiating instructions for installation or performance of equipment or systems, all of which remain the responsibility of the Contractor as required by the Contract Documents. The Architect's review of the Contractor's submittals shall not relieve the Contractor of the obligations under Sections 3.3, 3.5, and 3.12. The Architect's review shall not constitute approval of safety precautions or of any construction means, methods, techniques, sequences, or procedures. The Architect's approval of a specific item shall not indicate approval of an assembly of which the item is a component.

§ 4.2.8 The Architect will prepare Change Orders and Construction Change Directives, and may order minor changes in the Work as provided in Section 7.4. The Architect will investigate and make determinations and recommendations regarding concealed and unknown conditions as provided in Section 3.7.4.

§ 4.2.9 The Architect will conduct inspections to determine the date or dates of Substantial Completion and the date of final completion; issue Certificates of Substantial Completion pursuant to Section 9.8; receive and forward to the Owner, for the Owner's review and records, written warranties and related documents required by the Contract and assembled by the Contractor pursuant to Section 9.10; and issue a final Certificate for Payment pursuant to Section 9.10.

§ 4.2.10 If the Owner and Architect agree, the Architect will provide one or more Project representatives to assist in carrying out the Architect's responsibilities at the site. The Owner shall notify the Contractor of any change in the duties, responsibilities and limitations of authority of the Project representatives.

§ 4.2.11 The Architect will interpret and decide matters concerning performance under, and requirements of, the Contract Documents on written request of either the Owner or Contractor. The Architect's response to such requests will be made in writing within any time limits agreed upon or otherwise with reasonable promptness.

§ 4.2.12 Interpretations and decisions of the Architect will be consistent with the intent of, and reasonably inferable from, the Contract Documents and will be in writing or in the form of drawings. When making such interpretations and decisions, the Architect will endeavor to secure faithful performance by both Owner and Contractor, will not show partiality to either, and will not be liable for results of interpretations or decisions rendered in good faith.

§ 4.2.13 The Architect's decisions on matters relating to aesthetic effect will be final if consistent with the intent expressed in the Contract Documents.

§ 4.2.14 The Architect will review and respond to requests for information about the Contract Documents. The Architect's response to such requests will be made in writing within any time limits agreed upon or otherwise with reasonable promptness. If appropriate, the Architect will prepare and issue supplemental Drawings and Specifications in response to the requests for information.

AIA Document A201® – 2017. Copyright © 1911, 1915, 1918, 1925, 1937, 1951, 1958, 1961, 1963, 1966, 1970, 1976, 1987, 1997, 2007 and 2017 by The American Institute of Architects. All rights reserved. The "American Institute of Architects," "AIA," the AIA Logo, "A201," and "AIA Contract Documents" are registered trademarks and may not be used without permission. This document was produced by AIA software at 16:31:54 ET on 05/19/2022 under Order No.7850528272 which expires on 08/08/2022, is not for resale, is licensed for one-time use only, and may only be used in accordance with the AIA Contract Documents® Terms of Service. To report copyright violations, e-mail copyright@aia.org.
User Notes: (1818773814)

ARTICLE 5 SUBCONTRACTORS

§ 5.1 Definitions

§ 5.1.1 A Subcontractor is a person or entity who has a direct contract with the Contractor to perform a portion of the Work at the site. The term "Subcontractor" is referred to throughout the Contract Documents as if singular in number and means a Subcontractor or an authorized representative of the Subcontractor. The term "Subcontractor" does not include a Separate Contractor or the subcontractors of a Separate Contractor.

§ 5.1.2 A Sub-subcontractor is a person or entity who has a direct or indirect contract with a Subcontractor to perform a portion of the Work at the site. The term "Sub-subcontractor" is referred to throughout the Contract Documents as if singular in number and means a Sub-subcontractor or an authorized representative of the Sub-subcontractor.

§ 5.2 Award of Subcontracts and Other Contracts for Portions of the Work

§ 5.2.1 Unless otherwise stated in the Contract Documents, the Contractor, as soon as practicable after award of the Contract, shall notify the Owner and Architect of the persons or entities proposed for each principal portion of the Work, including those who are to furnish materials or equipment fabricated to a special design. Within 14 days of receipt of the information, the Architect may notify the Contractor whether the Owner or the Architect (1) has reasonable objection to any such proposed person or entity or (2) requires additional time for review. Failure of the Architect to provide notice within the 14-day period shall constitute notice of no reasonable objection.

§ 5.2.2 The Contractor shall not contract with a proposed person or entity to whom the Owner or Architect has made reasonable and timely objection. The Contractor shall not be required to contract with anyone to whom the Contractor has made reasonable objection.

§ 5.2.3 If the Owner or Architect has reasonable objection to a person or entity proposed by the Contractor, the Contractor shall propose another to whom the Owner or Architect has no reasonable objection. If the proposed but rejected Subcontractor was reasonably capable of performing the Work, the Contract Sum and Contract Time shall be increased or decreased by the difference, if any, occasioned by such change, and an appropriate Change Order shall be issued before commencement of the substitute Subcontractor's Work. However, no increase in the Contract Sum or Contract Time shall be allowed for such change unless the Contractor has acted promptly and responsively in submitting names as required.

§ 5.2.4 The Contractor shall not substitute a Subcontractor, person, or entity for one previously selected if the Owner or Architect makes reasonable objection to such substitution.

§ 5.3 Subcontractual Relations

By appropriate written agreement, the Contractor shall require each Subcontractor, to the extent of the Work to be performed by the Subcontractor, to be bound to the Contractor by terms of the Contract Documents, and to assume toward the Contractor all the obligations and responsibilities, including the responsibility for safety of the Subcontractor's Work that the Contractor, by these Contract Documents, assumes toward the Owner and Architect. Each subcontract agreement shall preserve and protect the rights of the Owner and Architect under the Contract Documents with respect to the Work to be performed by the Subcontractor so that subcontracting thereof will not prejudice such rights, and shall allow to the Subcontractor, unless specifically provided otherwise in the subcontract agreement, the benefit of all rights, remedies, and redress against the Contractor that the Contractor, by the Contract Documents, has against the Owner. Where appropriate, the Contractor shall require each Subcontractor to enter into similar agreements with Sub-subcontractors. The Contractor shall make available to each proposed Subcontractor, prior to the execution of the subcontract agreement, copies of the Contract Documents to which the Subcontractor will be bound, and, upon written request of the Subcontractor, identify to the Subcontractor terms and conditions of the proposed subcontract agreement that may be at variance with the Contract Documents. Subcontractors will similarly make copies of applicable portions of such documents available to their respective proposed Sub-subcontractors.

§ 5.4 Contingent Assignment of Subcontracts

§ 5.4.1 Each subcontract agreement for a portion of the Work is assigned by the Contractor to the Owner, provided that

.1 assignment is effective only after termination of the Contract by the Owner for cause pursuant to Section 14.2 and only for those subcontract agreements that the Owner accepts by notifying the Subcontractor and Contractor; and

.2 assignment is subject to the prior rights of the surety, if any, obligated under bond relating to the Contract.

AIA Document A201® – 2017. Copyright © 1911, 1915, 1918, 1925, 1937, 1951, 1958, 1961, 1963, 1966, 1970, 1976, 1987, 1997, 2007 and 2017 by The American Institute of Architects. All rights reserved. The "American Institute of Architects," "AIA," the AIA Logo, "A201," and "AIA Contract Documents" are registered trademarks and may not be used without permission. This document was produced by AIA software at 16:31:54 ET on 05/19/2022 under Order No.7850528272 which expires on 08/08/2022, is not for resale, is licensed for one-time use only, and may only be used in accordance with the AIA Contract Documents® Terms of Service. To report copyright violations, e-mail copyright@aia.org.
User Notes: (1818773814)

When the Owner accepts the assignment of a subcontract agreement, the Owner assumes the Contractor's rights and obligations under the subcontract.

§ 5.4.2 Upon such assignment, if the Work has been suspended for more than 30 days, the Subcontractor's compensation shall be equitably adjusted for increases in cost resulting from the suspension.

§ 5.4.3 Upon assignment to the Owner under this Section 5.4, the Owner may further assign the subcontract to a successor contractor or other entity. If the Owner assigns the subcontract to a successor contractor or other entity, the Owner shall nevertheless remain legally responsible for all of the successor contractor's obligations under the subcontract.

ARTICLE 6 CONSTRUCTION BY OWNER OR BY SEPARATE CONTRACTORS

§ 6.1 Owner's Right to Perform Construction and to Award Separate Contracts

§ 6.1.1 The term "Separate Contractor(s)" shall mean other contractors retained by the Owner under separate agreements. The Owner reserves the right to perform construction or operations related to the Project with the Owner's own forces, and with Separate Contractors retained under Conditions of the Contract substantially similar to those of this Contract, including those provisions of the Conditions of the Contract related to insurance and waiver of subrogation.

§ 6.1.2 When separate contracts are awarded for different portions of the Project or other construction or operations on the site, the term "Contractor" in the Contract Documents in each case shall mean the Contractor who executes each separate Owner-Contractor Agreement.

§ 6.1.3 The Owner shall provide for coordination of the activities of the Owner's own forces and of each Separate Contractor with the Work of the Contractor, who shall cooperate with them. The Contractor shall participate with any Separate Contractors and the Owner in reviewing their construction schedules. The Contractor shall make any revisions to its construction schedule deemed necessary after a joint review and mutual agreement. The construction schedules shall then constitute the schedules to be used by the Contractor, Separate Contractors, and the Owner until subsequently revised.

§ 6.1.4 Unless otherwise provided in the Contract Documents, when the Owner performs construction or operations related to the Project with the Owner's own forces or with Separate Contractors, the Owner or its Separate Contractors shall have the same obligations and rights that the Contractor has under the Conditions of the Contract, including, without excluding others, those stated in Article 3, this Article 6, and Articles 10, 11, and 12.

§ 6.2 Mutual Responsibility

§ 6.2.1 The Contractor shall afford the Owner and Separate Contractors reasonable opportunity for introduction and storage of their materials and equipment and performance of their activities, and shall connect and coordinate the Contractor's construction and operations with theirs as required by the Contract Documents.

§ 6.2.2 If part of the Contractor's Work depends for proper execution or results upon construction or operations by the Owner or a Separate Contractor, the Contractor shall, prior to proceeding with that portion of the Work, promptly notify the Architect of apparent discrepancies or defects in the construction or operations by the Owner or Separate Contractor that would render it unsuitable for proper execution and results of the Contractor's Work. Failure of the Contractor to notify the Architect of apparent discrepancies or defects prior to proceeding with the Work shall constitute an acknowledgment that the Owner's or Separate Contractor's completed or partially completed construction is fit and proper to receive the Contractor's Work. The Contractor shall not be responsible for discrepancies or defects in the construction or operations by the Owner or Separate Contractor that are not apparent.

§ 6.2.3 The Contractor shall reimburse the Owner for costs the Owner incurs that are payable to a Separate Contractor because of the Contractor's delays, improperly timed activities or defective construction. The Owner shall be responsible to the Contractor for costs the Contractor incurs because of a Separate Contractor's delays, improperly timed activities, damage to the Work or defective construction.

§ 6.2.4 The Contractor shall promptly remedy damage that the Contractor wrongfully causes to completed or partially completed construction or to property of the Owner or Separate Contractor as provided in Section 10.2.5.

AIA Document A201® – 2017. Copyright © 1911, 1915, 1918, 1925, 1937, 1951, 1958, 1961, 1963, 1966, 1970, 1976, 1987, 1997, 2007 and 2017 by The American Institute of Architects. All rights reserved. The "American Institute of Architects," "AIA," the AIA Logo, "A201," and "AIA Contract Documents" are registered trademarks and may not be used without permission. This document was produced by AIA software at 16:31:54 ET on 05/19/2022 under Order No.7850528272 which expires on 08/08/2022, is not for resale, is licensed for one-time use only, and may only be used in accordance with the AIA Contract Documents® Terms of Service. To report copyright violations, e-mail copyright@aia.org.
User Notes: (1818773814)

§ 6.2.5 The Owner and each Separate Contractor shall have the same responsibilities for cutting and patching as are described for the Contractor in Section 3.14.

§ 6.3 Owner's Right to Clean Up

If a dispute arises among the Contractor, Separate Contractors, and the Owner as to the responsibility under their respective contracts for maintaining the premises and surrounding area free from waste materials and rubbish, the Owner may clean up and the Architect will allocate the cost among those responsible.

ARTICLE 7 CHANGES IN THE WORK

§ 7.1 General

§ 7.1.1 Changes in the Work may be accomplished after execution of the Contract, and without invalidating the Contract, by Change Order, Construction Change Directive or order for a minor change in the Work, subject to the limitations stated in this Article 7 and elsewhere in the Contract Documents.

§ 7.1.2 A Change Order shall be based upon agreement among the Owner, Contractor, and Architect. A Construction Change Directive requires agreement by the Owner and Architect and may or may not be agreed to by the Contractor. An order for a minor change in the Work may be issued by the Architect alone.

§ 7.1.3 Changes in the Work shall be performed under applicable provisions of the Contract Documents. The Contractor shall proceed promptly with changes in the Work, unless otherwise provided in the Change Order, Construction Change Directive, or order for a minor change in the Work.

§ 7.2 Change Orders

§ 7.2.1 A Change Order is a written instrument prepared by the Architect and signed by the Owner, Contractor, and Architect stating their agreement upon all of the following:

- .1 The change in the Work;
- .2 The amount of the adjustment, if any, in the Contract Sum; and
- .3 The extent of the adjustment, if any, in the Contract Time.

§ 7.3 Construction Change Directives

§ 7.3.1 A Construction Change Directive is a written order prepared by the Architect and signed by the Owner and Architect, directing a change in the Work prior to agreement on adjustment, if any, in the Contract Sum or Contract Time, or both. The Owner may by Construction Change Directive, without invalidating the Contract, order changes in the Work within the general scope of the Contract consisting of additions, deletions, or other revisions, the Contract Sum and Contract Time being adjusted accordingly.

§ 7.3.2 A Construction Change Directive shall be used in the absence of total agreement on the terms of a Change Order.

§ 7.3.3 If the Construction Change Directive provides for an adjustment to the Contract Sum, the adjustment shall be based on one of the following methods:

- .1 Mutual acceptance of a lump sum properly itemized and supported by sufficient substantiating data to permit evaluation;
- .2 Unit prices stated in the Contract Documents or subsequently agreed upon;
- .3 Cost to be determined in a manner agreed upon by the parties and a mutually acceptable fixed or percentage fee; or
- .4 As provided in Section 7.3.4.

§ 7.3.4 If the Contractor does not respond promptly or disagrees with the method for adjustment in the Contract Sum, the Architect shall determine the adjustment on the basis of reasonable expenditures and savings of those performing the Work attributable to the change, including, in case of an increase in the Contract Sum, an amount for overhead and profit as set forth in the Agreement, or if no such amount is set forth in the Agreement, a reasonable amount. In such case, and also under Section 7.3.3.3, the Contractor shall keep and present, in such form as the Architect may prescribe, an itemized accounting together with appropriate supporting data. Unless otherwise provided in the Contract Documents, costs for the purposes of this Section 7.3.4 shall be limited to the following:

Init.
/
AIA Document A201® – 2017. Copyright © 1911, 1915, 1918, 1925, 1937, 1951, 1958, 1961, 1963, 1966, 1970, 1976, 1987, 1997, 2007 and 2017 by The American Institute of Architects. All rights reserved. The "American Institute of Architects," "AIA," the AIA Logo, "A201," and "AIA Contract Documents" are registered trademarks and may not be used without permission. This document was produced by AIA software at 16:31:54 ET on 05/19/2022 under Order No.7850528272 which expires on 08/08/2022, is not for resale, is licensed for one-time use only, and may only be used in accordance with the AIA Contract Documents® Terms of Service. To report copyright violations, e-mail copyright@aia.org.
User Notes: (1818773814)

.1 Costs of labor, including applicable payroll taxes, fringe benefits required by agreement or custom, workers' compensation insurance, and other employee costs approved by the Architect;
.2 Costs of materials, supplies, and equipment, including cost of transportation, whether incorporated or consumed;
.3 Rental costs of machinery and equipment, exclusive of hand tools, whether rented from the Contractor or others;
.4 Costs of premiums for all bonds and insurance, permit fees, and sales, use, or similar taxes, directly related to the change; and
.5 Costs of supervision and field office personnel directly attributable to the change.

§ 7.3.5 If the Contractor disagrees with the adjustment in the Contract Time, the Contractor may make a Claim in accordance with applicable provisions of Article 15.

§ 7.3.6 Upon receipt of a Construction Change Directive, the Contractor shall promptly proceed with the change in the Work involved and advise the Architect of the Contractor's agreement or disagreement with the method, if any, provided in the Construction Change Directive for determining the proposed adjustment in the Contract Sum or Contract Time.

§ 7.3.7 A Construction Change Directive signed by the Contractor indicates the Contractor's agreement therewith, including adjustment in Contract Sum and Contract Time or the method for determining them. Such agreement shall be effective immediately and shall be recorded as a Change Order.

§ 7.3.8 The amount of credit to be allowed by the Contractor to the Owner for a deletion or change that results in a net decrease in the Contract Sum shall be actual net cost as confirmed by the Architect. When both additions and credits covering related Work or substitutions are involved in a change, the allowance for overhead and profit shall be figured on the basis of net increase, if any, with respect to that change.

§ 7.3.9 Pending final determination of the total cost of a Construction Change Directive to the Owner, the Contractor may request payment for Work completed under the Construction Change Directive in Applications for Payment. The Architect will make an interim determination for purposes of monthly certification for payment for those costs and certify for payment the amount that the Architect determines, in the Architect's professional judgment, to be reasonably justified. The Architect's interim determination of cost shall adjust the Contract Sum on the same basis as a Change Order, subject to the right of either party to disagree and assert a Claim in accordance with Article 15.

§ 7.3.10 When the Owner and Contractor agree with a determination made by the Architect concerning the adjustments in the Contract Sum and Contract Time, or otherwise reach agreement upon the adjustments, such agreement shall be effective immediately and the Architect will prepare a Change Order. Change Orders may be issued for all or any part of a Construction Change Directive.

§ 7.4 Minor Changes in the Work

The Architect may order minor changes in the Work that are consistent with the intent of the Contract Documents and do not involve an adjustment in the Contract Sum or an extension of the Contract Time. The Architect's order for minor changes shall be in writing. If the Contractor believes that the proposed minor change in the Work will affect the Contract Sum or Contract Time, the Contractor shall notify the Architect and shall not proceed to implement the change in the Work. If the Contractor performs the Work set forth in the Architect's order for a minor change without prior notice to the Architect that such change will affect the Contract Sum or Contract Time, the Contractor waives any adjustment to the Contract Sum or extension of the Contract Time.

ARTICLE 8 TIME

§ 8.1 Definitions

§ 8.1.1 Unless otherwise provided, Contract Time is the period of time, including authorized adjustments, allotted in the Contract Documents for Substantial Completion of the Work.

§ 8.1.2 The date of commencement of the Work is the date established in the Agreement.

§ 8.1.3 The date of Substantial Completion is the date certified by the Architect in accordance with Section 9.8.

AIA Document A201® – 2017. Copyright © 1911, 1915, 1918, 1925, 1937, 1951, 1958, 1961, 1963, 1966, 1970, 1976, 1987, 1997, 2007 and 2017 by The American Institute of Architects. All rights reserved. The "American Institute of Architects," "AIA," the AIA Logo, "A201," and "AIA Contract Documents" are registered trademarks and may not be used without permission. This document was produced by AIA software at 16:31:54 ET on 05/19/2022 under Order No.7850528272 which expires on 08/08/2022, is not for resale, is licensed for one-time use only, and may only be used in accordance with the AIA Contract Documents® Terms of Service. To report copyright violations, e-mail copyright@aia.org.
User Notes:
(1818773814)

§ 8.1.4 The term "day" as used in the Contract Documents shall mean calendar day unless otherwise specifically defined.

§ 8.2 Progress and Completion

§ 8.2.1 Time limits stated in the Contract Documents are of the essence of the Contract. By executing the Agreement, the Contractor confirms that the Contract Time is a reasonable period for performing the Work.

§ 8.2.2 The Contractor shall not knowingly, except by agreement or instruction of the Owner in writing, commence the Work prior to the effective date of insurance required to be furnished by the Contractor and Owner.

§ 8.2.3 The Contractor shall proceed expeditiously with adequate forces and shall achieve Substantial Completion within the Contract Time.

§ 8.3 Delays and Extensions of Time

§ 8.3.1 If the Contractor is delayed at any time in the commencement or progress of the Work by (1) an act or neglect of the Owner or Architect, of an employee of either, or of a Separate Contractor; (2) by changes ordered in the Work; (3) by labor disputes, fire, unusual delay in deliveries, unavoidable casualties, adverse weather conditions documented in accordance with Section 15.1.6.2, or other causes beyond the Contractor's control; (4) by delay authorized by the Owner pending mediation and binding dispute resolution; or (5) by other causes that the Contractor asserts, and the Architect determines, justify delay, then the Contract Time shall be extended for such reasonable time as the Architect may determine.

§ 8.3.2 Claims relating to time shall be made in accordance with applicable provisions of Article 15.

§ 8.3.3 This Section 8.3 does not preclude recovery of damages for delay by either party under other provisions of the Contract Documents.

ARTICLE 9 PAYMENTS AND COMPLETION

§ 9.1 Contract Sum

§ 9.1.1 The Contract Sum is stated in the Agreement and, including authorized adjustments, is the total amount payable by the Owner to the Contractor for performance of the Work under the Contract Documents.

§ 9.1.2 If unit prices are stated in the Contract Documents or subsequently agreed upon, and if quantities originally contemplated are materially changed so that application of such unit prices to the actual quantities causes substantial inequity to the Owner or Contractor, the applicable unit prices shall be equitably adjusted.

§ 9.2 Schedule of Values

Where the Contract is based on a stipulated sum or Guaranteed Maximum Price, the Contractor shall submit a schedule of values to the Architect before the first Application for Payment, allocating the entire Contract Sum to the various portions of the Work. The schedule of values shall be prepared in the form, and supported by the data to substantiate its accuracy, required by the Architect. This schedule, unless objected to by the Architect, shall be used as a basis for reviewing the Contractor's Applications for Payment. Any changes to the schedule of values shall be submitted to the Architect and supported by such data to substantiate its accuracy as the Architect may require, and unless objected to by the Architect, shall be used as a basis for reviewing the Contractor's subsequent Applications for Payment.

§ 9.3 Applications for Payment

§ 9.3.1 At least ten days before the date established for each progress payment, the Contractor shall submit to the Architect an itemized Application for Payment prepared in accordance with the schedule of values, if required under Section 9.2, for completed portions of the Work. The application shall be notarized, if required, and supported by all data substantiating the Contractor's right to payment that the Owner or Architect require, such as copies of requisitions, and releases and waivers of liens from Subcontractors and suppliers, and shall reflect retainage if provided for in the Contract Documents.

§ 9.3.1.1 As provided in Section 7.3.9, such applications may include requests for payment on account of changes in the Work that have been properly authorized by Construction Change Directives, or by interim determinations of the Architect, but not yet included in Change Orders.

Init.
/
AIA Document A201® – 2017. Copyright © 1911, 1915, 1918, 1925, 1937, 1951, 1958, 1961, 1963, 1966, 1970, 1976, 1987, 1997, 2007 and 2017 by The American Institute of Architects. All rights reserved. The "American Institute of Architects," "AIA," the AIA Logo, "A201," and "AIA Contract Documents" are registered trademarks and may not be used without permission. This document was produced by AIA software at 16:31:54 ET on 05/19/2022 under Order No.7850528272 which expires on 08/08/2022, is not for resale, is licensed for one-time use only, and may only be used in accordance with the AIA Contract Documents® Terms of Service. To report copyright violations, e-mail copyright@aia.org.
User Notes:
(1818773814)

§ 9.3.1.2 Applications for Payment shall not include requests for payment for portions of the Work for which the Contractor does not intend to pay a Subcontractor or supplier, unless such Work has been performed by others whom the Contractor intends to pay.

§ 9.3.2 Unless otherwise provided in the Contract Documents, payments shall be made on account of materials and equipment delivered and suitably stored at the site for subsequent incorporation in the Work. If approved in advance by the Owner, payment may similarly be made for materials and equipment suitably stored off the site at a location agreed upon in writing. Payment for materials and equipment stored on or off the site shall be conditioned upon compliance by the Contractor with procedures satisfactory to the Owner to establish the Owner's title to such materials and equipment or otherwise protect the Owner's interest, and shall include the costs of applicable insurance, storage, and transportation to the site, for such materials and equipment stored off the site.

§ 9.3.3 The Contractor warrants that title to all Work covered by an Application for Payment will pass to the Owner no later than the time of payment. The Contractor further warrants that upon submittal of an Application for Payment all Work for which Certificates for Payment have been previously issued and payments received from the Owner shall, to the best of the Contractor's knowledge, information, and belief, be free and clear of liens, claims, security interests, or encumbrances, in favor of the Contractor, Subcontractors, suppliers, or other persons or entities that provided labor, materials, and equipment relating to the Work.

§ 9.4 Certificates for Payment

§ 9.4.1 The Architect will, within seven days after receipt of the Contractor's Application for Payment, either (1) issue to the Owner a Certificate for Payment in the full amount of the Application for Payment, with a copy to the Contractor; or (2) issue to the Owner a Certificate for Payment for such amount as the Architect determines is properly due, and notify the Contractor and Owner of the Architect's reasons for withholding certification in part as provided in Section 9.5.1; or (3) withhold certification of the entire Application for Payment, and notify the Contractor and Owner of the Architect's reason for withholding certification in whole as provided in Section 9.5.1.

§ 9.4.2 The issuance of a Certificate for Payment will constitute a representation by the Architect to the Owner, based on the Architect's evaluation of the Work and the data in the Application for Payment, that, to the best of the Architect's knowledge, information, and belief, the Work has progressed to the point indicated, the quality of the Work is in accordance with the Contract Documents, and that the Contractor is entitled to payment in the amount certified. The foregoing representations are subject to an evaluation of the Work for conformance with the Contract Documents upon Substantial Completion, to results of subsequent tests and inspections, to correction of minor deviations from the Contract Documents prior to completion, and to specific qualifications expressed by the Architect. However, the issuance of a Certificate for Payment will not be a representation that the Architect has (1) made exhaustive or continuous on-site inspections to check the quality or quantity of the Work; (2) reviewed construction means, methods, techniques, sequences, or procedures; (3) reviewed copies of requisitions received from Subcontractors and suppliers and other data requested by the Owner to substantiate the Contractor's right to payment; or (4) made examination to ascertain how or for what purpose the Contractor has used money previously paid on account of the Contract Sum.

§ 9.5 Decisions to Withhold Certification

§ 9.5.1 The Architect may withhold a Certificate for Payment in whole or in part, to the extent reasonably necessary to protect the Owner, if in the Architect's opinion the representations to the Owner required by Section 9.4.2 cannot be made. If the Architect is unable to certify payment in the amount of the Application, the Architect will notify the Contractor and Owner as provided in Section 9.4.1. If the Contractor and Architect cannot agree on a revised amount, the Architect will promptly issue a Certificate for Payment for the amount for which the Architect is able to make such representations to the Owner. The Architect may also withhold a Certificate for Payment or, because of subsequently discovered evidence, may nullify the whole or a part of a Certificate for Payment previously issued, to such extent as may be necessary in the Architect's opinion to protect the Owner from loss for which the Contractor is responsible, including loss resulting from acts and omissions described in Section 3.3.2, because of

.1 defective Work not remedied;

.2 third party claims filed or reasonable evidence indicating probable filing of such claims, unless security acceptable to the Owner is provided by the Contractor;

.3 failure of the Contractor to make payments properly to Subcontractors or suppliers for labor, materials or equipment;

AIA Document A201® – 2017. Copyright © 1911, 1915, 1918, 1925, 1937, 1951, 1958, 1961, 1963, 1966, 1970, 1976, 1987, 1997, 2007 and 2017 by The American Institute of Architects. All rights reserved. The "American Institute of Architects," "AIA," the AIA Logo, "A201," and "AIA Contract Documents" are registered trademarks and may not be used without permission. This document was produced by AIA software at 16:31:54 ET on 05/19/2022 under Order No.7850528272 which expires on 08/08/2022, is not for resale, is licensed for one-time use only, and may only be used in accordance with the AIA Contract Documents® Terms of Service. To report copyright violations, e-mail copyright@aia.org.
User Notes: (1818773814)

.4 reasonable evidence that the Work cannot be completed for the unpaid balance of the Contract Sum;
.5 damage to the Owner or a Separate Contractor;
.6 reasonable evidence that the Work will not be completed within the Contract Time, and that the unpaid balance would not be adequate to cover actual or liquidated damages for the anticipated delay; or
.7 repeated failure to carry out the Work in accordance with the Contract Documents.

§ 9.5.2 When either party disputes the Architect's decision regarding a Certificate for Payment under Section 9.5.1, in whole or in part, that party may submit a Claim in accordance with Article 15.

§ 9.5.3 When the reasons for withholding certification are removed, certification will be made for amounts previously withheld.

§ 9.5.4 If the Architect withholds certification for payment under Section 9.5.1.3, the Owner may, at its sole option, issue joint checks to the Contractor and to any Subcontractor or supplier to whom the Contractor failed to make payment for Work properly performed or material or equipment suitably delivered. If the Owner makes payments by joint check, the Owner shall notify the Architect and the Contractor shall reflect such payment on its next Application for Payment.

§ 9.6 Progress Payments

§ 9.6.1 After the Architect has issued a Certificate for Payment, the Owner shall make payment in the manner and within the time provided in the Contract Documents, and shall so notify the Architect.

§ 9.6.2 The Contractor shall pay each Subcontractor, no later than seven days after receipt of payment from the Owner, the amount to which the Subcontractor is entitled, reflecting percentages actually retained from payments to the Contractor on account of the Subcontractor's portion of the Work. The Contractor shall, by appropriate agreement with each Subcontractor, require each Subcontractor to make payments to Sub-subcontractors in a similar manner.

§ 9.6.3 The Architect will, on request, furnish to a Subcontractor, if practicable, information regarding percentages of completion or amounts applied for by the Contractor and action taken thereon by the Architect and Owner on account of portions of the Work done by such Subcontractor.

§ 9.6.4 The Owner has the right to request written evidence from the Contractor that the Contractor has properly paid Subcontractors and suppliers amounts paid by the Owner to the Contractor for subcontracted Work. If the Contractor fails to furnish such evidence within seven days, the Owner shall have the right to contact Subcontractors and suppliers to ascertain whether they have been properly paid. Neither the Owner nor Architect shall have an obligation to pay, or to see to the payment of money to, a Subcontractor or supplier, except as may otherwise be required by law.

§ 9.6.5 The Contractor's payments to suppliers shall be treated in a manner similar to that provided in Sections 9.6.2, 9.6.3 and 9.6.4.

§ 9.6.6 A Certificate for Payment, a progress payment, or partial or entire use or occupancy of the Project by the Owner shall not constitute acceptance of Work not in accordance with the Contract Documents.

§ 9.6.7 Unless the Contractor provides the Owner with a payment bond in the full penal sum of the Contract Sum, payments received by the Contractor for Work properly performed by Subcontractors or provided by suppliers shall be held by the Contractor for those Subcontractors or suppliers who performed Work or furnished materials, or both, under contract with the Contractor for which payment was made by the Owner. Nothing contained herein shall require money to be placed in a separate account and not commingled with money of the Contractor, create any fiduciary liability or tort liability on the part of the Contractor for breach of trust, or entitle any person or entity to an award of punitive damages against the Contractor for breach of the requirements of this provision.

§ 9.6.8 Provided the Owner has fulfilled its payment obligations under the Contract Documents, the Contractor shall defend and indemnify the Owner from all loss, liability, damage or expense, including reasonable attorney's fees and litigation expenses, arising out of any lien claim or other claim for payment by any Subcontractor or supplier of any tier. Upon receipt of notice of a lien claim or other claim for payment, the Owner shall notify the Contractor. If approved by the applicable court, when required, the Contractor may substitute a surety bond for the property against which the lien or other claim for payment has been asserted.

AIA Document A201® – 2017. Copyright © 1911, 1915, 1918, 1925, 1937, 1951, 1958, 1961, 1963, 1966, 1970, 1976, 1987, 1997, 2007 and 2017 by The American Institute of Architects. All rights reserved. The "American Institute of Architects," "AIA," the AIA Logo, "A201," and "AIA Contract Documents" are registered trademarks and may not be used without permission. This document was produced by AIA software at 16:31:54 ET on 05/19/2022 under Order No.7850528272 which expires on 08/08/2022, is not for resale, is licensed for one-time use only, and may only be used in accordance with the AIA Contract Documents® Terms of Service. To report copyright violations, e-mail copyright@aia.org.
User Notes: (1818773814)

§ 9.7 Failure of Payment

If the Architect does not issue a Certificate for Payment, through no fault of the Contractor, within seven days after receipt of the Contractor's Application for Payment, or if the Owner does not pay the Contractor within seven days after the date established in the Contract Documents, the amount certified by the Architect or awarded by binding dispute resolution, then the Contractor may, upon seven additional days' notice to the Owner and Architect, stop the Work until payment of the amount owing has been received. The Contract Time shall be extended appropriately and the Contract Sum shall be increased by the amount of the Contractor's reasonable costs of shutdown, delay and start-up, plus interest as provided for in the Contract Documents.

§ 9.8 Substantial Completion

§ 9.8.1 Substantial Completion is the stage in the progress of the Work when the Work or designated portion thereof is sufficiently complete in accordance with the Contract Documents so that the Owner can occupy or utilize the Work for its intended use.

§ 9.8.2 When the Contractor considers that the Work, or a portion thereof which the Owner agrees to accept separately, is substantially complete, the Contractor shall prepare and submit to the Architect a comprehensive list of items to be completed or corrected prior to final payment. Failure to include an item on such list does not alter the responsibility of the Contractor to complete all Work in accordance with the Contract Documents.

§ 9.8.3 Upon receipt of the Contractor's list, the Architect will make an inspection to determine whether the Work or designated portion thereof is substantially complete. If the Architect's inspection discloses any item, whether or not included on the Contractor's list, which is not sufficiently complete in accordance with the Contract Documents so that the Owner can occupy or utilize the Work or designated portion thereof for its intended use, the Contractor shall, before issuance of the Certificate of Substantial Completion, complete or correct such item upon notification by the Architect. In such case, the Contractor shall then submit a request for another inspection by the Architect to determine Substantial Completion.

§ 9.8.4 When the Work or designated portion thereof is substantially complete, the Architect will prepare a Certificate of Substantial Completion that shall establish the date of Substantial Completion; establish responsibilities of the Owner and Contractor for security, maintenance, heat, utilities, damage to the Work and insurance; and fix the time within which the Contractor shall finish all items on the list accompanying the Certificate. Warranties required by the Contract Documents shall commence on the date of Substantial Completion of the Work or designated portion thereof unless otherwise provided in the Certificate of Substantial Completion.

§ 9.8.5 The Certificate of Substantial Completion shall be submitted to the Owner and Contractor for their written acceptance of responsibilities assigned to them in the Certificate. Upon such acceptance, and consent of surety if any, the Owner shall make payment of retainage applying to the Work or designated portion thereof. Such payment shall be adjusted for Work that is incomplete or not in accordance with the requirements of the Contract Documents.

§ 9.9 Partial Occupancy or Use

§ 9.9.1 The Owner may occupy or use any completed or partially completed portion of the Work at any stage when such portion is designated by separate agreement with the Contractor, provided such occupancy or use is consented to by the insurer and authorized by public authorities having jurisdiction over the Project. Such partial occupancy or use may commence whether or not the portion is substantially complete, provided the Owner and Contractor have accepted in writing the responsibilities assigned to each of them for payments, retainage, if any, security, maintenance, heat, utilities, damage to the Work and insurance, and have agreed in writing concerning the period for correction of the Work and commencement of warranties required by the Contract Documents. When the Contractor considers a portion substantially complete, the Contractor shall prepare and submit a list to the Architect as provided under Section 9.8.2. Consent of the Contractor to partial occupancy or use shall not be unreasonably withheld. The stage of the progress of the Work shall be determined by written agreement between the Owner and Contractor or, if no agreement is reached, by decision of the Architect.

§ 9.9.2 Immediately prior to such partial occupancy or use, the Owner, Contractor, and Architect shall jointly inspect the area to be occupied or portion of the Work to be used in order to determine and record the condition of the Work.

AIA Document A201® – 2017. Copyright © 1911, 1915, 1918, 1925, 1937, 1951, 1958, 1961, 1963, 1966, 1970, 1976, 1987, 1997, 2007 and 2017 by The American Institute of Architects. All rights reserved. The "American Institute of Architects," "AIA," the AIA Logo, "A201," and "AIA Contract Documents" are registered trademarks and may not be used without permission. This document was produced by AIA software at 16:31:54 ET on 05/19/2022 under Order No.7850528272 which expires on 08/08/2022, is not for resale, is licensed for one-time use only, and may only be used in accordance with the AIA Contract Documents® Terms of Service. To report copyright violations, e-mail copyright@aia.org.
User Notes:
(1818773814)

§ 9.9.3 Unless otherwise agreed upon, partial occupancy or use of a portion or portions of the Work shall not constitute acceptance of Work not complying with the requirements of the Contract Documents.

§ 9.10 Final Completion and Final Payment

§ 9.10.1 Upon receipt of the Contractor's notice that the Work is ready for final inspection and acceptance and upon receipt of a final Application for Payment, the Architect will promptly make such inspection. When the Architect finds the Work acceptable under the Contract Documents and the Contract fully performed, the Architect will promptly issue a final Certificate for Payment stating that to the best of the Architect's knowledge, information and belief, and on the basis of the Architect's on-site visits and inspections, the Work has been completed in accordance with the Contract Documents and that the entire balance found to be due the Contractor and noted in the final Certificate is due and payable. The Architect's final Certificate for Payment will constitute a further representation that conditions listed in Section 9.10.2 as precedent to the Contractor's being entitled to final payment have been fulfilled.

§ 9.10.2 Neither final payment nor any remaining retained percentage shall become due until the Contractor submits to the Architect (1) an affidavit that payrolls, bills for materials and equipment, and other indebtedness connected with the Work for which the Owner or the Owner's property might be responsible or encumbered (less amounts withheld by Owner) have been paid or otherwise satisfied, (2) a certificate evidencing that insurance required by the Contract Documents to remain in force after final payment is currently in effect, (3) a written statement that the Contractor knows of no reason that the insurance will not be renewable to cover the period required by the Contract Documents, (4) consent of surety, if any, to final payment, (5) documentation of any special warranties, such as manufacturers' warranties or specific Subcontractor warranties, and (6) if required by the Owner, other data establishing payment or satisfaction of obligations, such as receipts and releases and waivers of liens, claims, security interests, or encumbrances arising out of the Contract, to the extent and in such form as may be designated by the Owner. If a Subcontractor refuses to furnish a release or waiver required by the Owner, the Contractor may furnish a bond satisfactory to the Owner to indemnify the Owner against such lien, claim, security interest, or encumbrance. If a lien, claim, security interest, or encumbrance remains unsatisfied after payments are made, the Contractor shall refund to the Owner all money that the Owner may be compelled to pay in discharging the lien, claim, security interest, or encumbrance, including all costs and reasonable attorneys' fees.

§ 9.10.3 If, after Substantial Completion of the Work, final completion thereof is materially delayed through no fault of the Contractor or by issuance of Change Orders affecting final completion, and the Architect so confirms, the Owner shall, upon application by the Contractor and certification by the Architect, and without terminating the Contract, make payment of the balance due for that portion of the Work fully completed, corrected, and accepted. If the remaining balance for Work not fully completed or corrected is less than retainage stipulated in the Contract Documents, and if bonds have been furnished, the written consent of the surety to payment of the balance due for that portion of the Work fully completed and accepted shall be submitted by the Contractor to the Architect prior to certification of such payment. Such payment shall be made under terms and conditions governing final payment, except that it shall not constitute a waiver of Claims.

§ 9.10.4 The making of final payment shall constitute a waiver of Claims by the Owner except those arising from

- **.1** liens, Claims, security interests, or encumbrances arising out of the Contract and unsettled;
- **.2** failure of the Work to comply with the requirements of the Contract Documents;
- **.3** terms of special warranties required by the Contract Documents; or
- **.4** audits performed by the Owner, if permitted by the Contract Documents, after final payment.

§ 9.10.5 Acceptance of final payment by the Contractor, a Subcontractor, or a supplier, shall constitute a waiver of claims by that payee except those previously made in writing and identified by that payee as unsettled at the time of final Application for Payment.

ARTICLE 10 PROTECTION OF PERSONS AND PROPERTY

§ 10.1 Safety Precautions and Programs

The Contractor shall be responsible for initiating, maintaining, and supervising all safety precautions and programs in connection with the performance of the Contract.

§ 10.2 Safety of Persons and Property

§ 10.2.1 The Contractor shall take reasonable precautions for safety of, and shall provide reasonable protection to prevent damage, injury, or loss to

AIA Document A201® – 2017. Copyright © 1911, 1915, 1918, 1925, 1937, 1951, 1958, 1961, 1963, 1966, 1970, 1976, 1987, 1997, 2007 and 2017 by The American Institute of Architects. All rights reserved. The "American Institute of Architects," "AIA," the AIA Logo, "A201," and "AIA Contract Documents" are registered trademarks and may not be used without permission. This document was produced by AIA software at 16:31:54 ET on 05/19/2022 under Order No.7850528272 which expires on 08/08/2022, is not for resale, is licensed for one-time use only, and may only be used in accordance with the AIA Contract Documents® Terms of Service. To report copyright violations, e-mail copyright@aia.org.
User Notes: (1818773814)

.1 employees on the Work and other persons who may be affected thereby;
.2 the Work and materials and equipment to be incorporated therein, whether in storage on or off the site, under care, custody, or control of the Contractor, a Subcontractor, or a Sub-subcontractor; and
.3 other property at the site or adjacent thereto, such as trees, shrubs, lawns, walks, pavements, roadways, structures, and utilities not designated for removal, relocation, or replacement in the course of construction.

§ 10.2.2 The Contractor shall comply with, and give notices required by applicable laws, statutes, ordinances, codes, rules and regulations, and lawful orders of public authorities, bearing on safety of persons or property or their protection from damage, injury, or loss.

§ 10.2.3 The Contractor shall implement, erect, and maintain, as required by existing conditions and performance of the Contract, reasonable safeguards for safety and protection, including posting danger signs and other warnings against hazards; promulgating safety regulations; and notifying the owners and users of adjacent sites and utilities of the safeguards.

§ 10.2.4 When use or storage of explosives or other hazardous materials or equipment, or unusual methods are necessary for execution of the Work, the Contractor shall exercise utmost care and carry on such activities under supervision of properly qualified personnel.

§ 10.2.5 The Contractor shall promptly remedy damage and loss (other than damage or loss insured under property insurance required by the Contract Documents) to property referred to in Sections 10.2.1.2 and 10.2.1.3 caused in whole or in part by the Contractor, a Subcontractor, a Sub-subcontractor, or anyone directly or indirectly employed by any of them, or by anyone for whose acts they may be liable and for which the Contractor is responsible under Sections 10.2.1.2 and 10.2.1.3. The Contractor may make a Claim for the cost to remedy the damage or loss to the extent such damage or loss is attributable to acts or omissions of the Owner or Architect or anyone directly or indirectly employed by either of them, or by anyone for whose acts either of them may be liable, and not attributable to the fault or negligence of the Contractor. The foregoing obligations of the Contractor are in addition to the Contractor's obligations under Section 3.18.

§ 10.2.6 The Contractor shall designate a responsible member of the Contractor's organization at the site whose duty shall be the prevention of accidents. This person shall be the Contractor's superintendent unless otherwise designated by the Contractor in writing to the Owner and Architect.

§ 10.2.7 The Contractor shall not permit any part of the construction or site to be loaded so as to cause damage or create an unsafe condition.

§ 10.2.8 Injury or Damage to Person or Property
If either party suffers injury or damage to person or property because of an act or omission of the other party, or of others for whose acts such party is legally responsible, notice of the injury or damage, whether or not insured, shall be given to the other party within a reasonable time not exceeding 21 days after discovery. The notice shall provide sufficient detail to enable the other party to investigate the matter.

§ 10.3 Hazardous Materials and Substances
§ 10.3.1 The Contractor is responsible for compliance with any requirements included in the Contract Documents regarding hazardous materials or substances. If the Contractor encounters a hazardous material or substance not addressed in the Contract Documents and if reasonable precautions will be inadequate to prevent foreseeable bodily injury or death to persons resulting from a material or substance, including but not limited to asbestos or polychlorinated biphenyl (PCB), encountered on the site by the Contractor, the Contractor shall, upon recognizing the condition, immediately stop Work in the affected area and notify the Owner and Architect of the condition.

§ 10.3.2 Upon receipt of the Contractor's notice, the Owner shall obtain the services of a licensed laboratory to verify the presence or absence of the material or substance reported by the Contractor and, in the event such material or substance is found to be present, to cause it to be rendered harmless. Unless otherwise required by the Contract Documents, the Owner shall furnish in writing to the Contractor and Architect the names and qualifications of persons or entities who are to perform tests verifying the presence or absence of the material or substance or who are to perform the task of removal or safe containment of the material or substance. The Contractor and the Architect will

AIA Document A201® – 2017. Copyright © 1911, 1915, 1918, 1925, 1937, 1951, 1958, 1961, 1963, 1966, 1970, 1976, 1987, 1997, 2007 and 2017 by The American Institute of Architects. All rights reserved. The "American Institute of Architects," "AIA," the AIA Logo, "A201," and "AIA Contract Documents" are registered trademarks and may not be used without permission. This document was produced by AIA software at 16:31:54 ET on 05/19/2022 under Order No.7850528272 which expires on 08/08/2022, is not for resale, is licensed for one-time use only, and may only be used in accordance with the AIA Contract Documents® Terms of Service. To report copyright violations, e-mail copyright@aia.org.
User Notes:

promptly reply to the Owner in writing stating whether or not either has reasonable objection to the persons or entities proposed by the Owner. If either the Contractor or Architect has an objection to a person or entity proposed by the Owner, the Owner shall propose another to whom the Contractor and the Architect have no reasonable objection. When the material or substance has been rendered harmless, Work in the affected area shall resume upon written agreement of the Owner and Contractor. By Change Order, the Contract Time shall be extended appropriately and the Contract Sum shall be increased by the amount of the Contractor's reasonable additional costs of shutdown, delay, and start-up.

§ 10.3.3 To the fullest extent permitted by law, the Owner shall indemnify and hold harmless the Contractor, Subcontractors, Architect, Architect's consultants, and agents and employees of any of them from and against claims, damages, losses, and expenses, including but not limited to attorneys' fees, arising out of or resulting from performance of the Work in the affected area if in fact the material or substance presents the risk of bodily injury or death as described in Section 10.3.1 and has not been rendered harmless, provided that such claim, damage, loss, or expense is attributable to bodily injury, sickness, disease or death, or to injury to or destruction of tangible property (other than the Work itself), except to the extent that such damage, loss, or expense is due to the fault or negligence of the party seeking indemnity.

§ 10.3.4 The Owner shall not be responsible under this Section 10.3 for hazardous materials or substances the Contractor brings to the site unless such materials or substances are required by the Contract Documents. The Owner shall be responsible for hazardous materials or substances required by the Contract Documents, except to the extent of the Contractor's fault or negligence in the use and handling of such materials or substances.

§ 10.3.5 The Contractor shall reimburse the Owner for the cost and expense the Owner incurs (1) for remediation of hazardous materials or substances the Contractor brings to the site and negligently handles, or (2) where the Contractor fails to perform its obligations under Section 10.3.1, except to the extent that the cost and expense are due to the Owner's fault or negligence.

§ 10.3.6 If, without negligence on the part of the Contractor, the Contractor is held liable by a government agency for the cost of remediation of a hazardous material or substance solely by reason of performing Work as required by the Contract Documents, the Owner shall reimburse the Contractor for all cost and expense thereby incurred.

§ 10.4 Emergencies

In an emergency affecting safety of persons or property, the Contractor shall act, at the Contractor's discretion, to prevent threatened damage, injury, or loss. Additional compensation or extension of time claimed by the Contractor on account of an emergency shall be determined as provided in Article 15 and Article 7.

ARTICLE 11 INSURANCE AND BONDS

§ 11.1 Contractor's Insurance and Bonds

§ 11.1.1 The Contractor shall purchase and maintain insurance of the types and limits of liability, containing the endorsements, and subject to the terms and conditions, as described in the Agreement or elsewhere in the Contract Documents. The Contractor shall purchase and maintain the required insurance from an insurance company or insurance companies lawfully authorized to issue insurance in the jurisdiction where the Project is located. The Owner, Architect, and Architect's consultants shall be named as additional insureds under the Contractor's commercial general liability policy or as otherwise described in the Contract Documents.

§ 11.1.2 The Contractor shall provide surety bonds of the types, for such penal sums, and subject to such terms and conditions as required by the Contract Documents. The Contractor shall purchase and maintain the required bonds from a company or companies lawfully authorized to issue surety bonds in the jurisdiction where the Project is located.

§ 11.1.3 Upon the request of any person or entity appearing to be a potential beneficiary of bonds covering payment of obligations arising under the Contract, the Contractor shall promptly furnish a copy of the bonds or shall authorize a copy to be furnished.

§ 11.1.4 Notice of Cancellation or Expiration of Contractor's Required Insurance. Within three (3) business days of the date the Contractor becomes aware of an impending or actual cancellation or expiration of any insurance required by the Contract Documents, the Contractor shall provide notice to the Owner of such impending or actual cancellation or expiration. Upon receipt of notice from the Contractor, the Owner shall, unless the lapse in coverage arises from an act

Init.
/
AIA Document A201® – 2017. Copyright © 1911, 1915, 1918, 1925, 1937, 1951, 1958, 1961, 1963, 1966, 1970, 1976, 1987, 1997, 2007 and 2017 by The American Institute of Architects. All rights reserved. The "American Institute of Architects," "AIA," the AIA Logo, "A201," and "AIA Contract Documents" are registered trademarks and may not be used without permission. This document was produced by AIA software at 16:31:54 ET on 05/19/2022 under Order No.7850528272 which expires on 08/08/2022, is not for resale, is licensed for one-time use only, and may only be used in accordance with the AIA Contract Documents® Terms of Service. To report copyright violations, e-mail copyright@aia.org.
User Notes:
(1818773814)

or omission of the Owner, have the right to stop the Work until the lapse in coverage has been cured by the procurement of replacement coverage by the Contractor. The furnishing of notice by the Contractor shall not relieve the Contractor of any contractual obligation to provide any required coverage.

§ 11.2 Owner's Insurance

§ 11.2.1 The Owner shall purchase and maintain insurance of the types and limits of liability, containing the endorsements, and subject to the terms and conditions, as described in the Agreement or elsewhere in the Contract Documents. The Owner shall purchase and maintain the required insurance from an insurance company or insurance companies lawfully authorized to issue insurance in the jurisdiction where the Project is located.

§ 11.2.2 Failure to Purchase Required Property Insurance. If the Owner fails to purchase and maintain the required property insurance, with all of the coverages and in the amounts described in the Agreement or elsewhere in the Contract Documents, the Owner shall inform the Contractor in writing prior to commencement of the Work. Upon receipt of notice from the Owner, the Contractor may delay commencement of the Work and may obtain insurance that will protect the interests of the Contractor, Subcontractors, and Sub-Subcontractors in the Work. When the failure to provide coverage has been cured or resolved, the Contract Sum and Contract Time shall be equitably adjusted. In the event the Owner fails to procure coverage, the Owner waives all rights against the Contractor, Subcontractors, and Sub-subcontractors to the extent the loss to the Owner would have been covered by the insurance to have been procured by the Owner. The cost of the insurance shall be charged to the Owner by a Change Order. If the Owner does not provide written notice, and the Contractor is damaged by the failure or neglect of the Owner to purchase or maintain the required insurance, the Owner shall reimburse the Contractor for all reasonable costs and damages attributable thereto.

§ 11.2.3 Notice of Cancellation or Expiration of Owner's Required Property Insurance. Within three (3) business days of the date the Owner becomes aware of an impending or actual cancellation or expiration of any property insurance required by the Contract Documents, the Owner shall provide notice to the Contractor of such impending or actual cancellation or expiration. Unless the lapse in coverage arises from an act or omission of the Contractor: (1) the Contractor, upon receipt of notice from the Owner, shall have the right to stop the Work until the lapse in coverage has been cured by the procurement of replacement coverage by either the Owner or the Contractor; (2) the Contract Time and Contract Sum shall be equitably adjusted; and (3) the Owner waives all rights against the Contractor, Subcontractors, and Sub-subcontractors to the extent any loss to the Owner would have been covered by the insurance had it not expired or been cancelled. If the Contractor purchases replacement coverage, the cost of the insurance shall be charged to the Owner by an appropriate Change Order. The furnishing of notice by the Owner shall not relieve the Owner of any contractual obligation to provide required insurance.

§ 11.3 Waivers of Subrogation

§ 11.3.1 The Owner and Contractor waive all rights against (1) each other and any of their subcontractors, sub-subcontractors, agents, and employees, each of the other; (2) the Architect and Architect's consultants; and (3) Separate Contractors, if any, and any of their subcontractors, sub-subcontractors, agents, and employees, for damages caused by fire, or other causes of loss, to the extent those losses are covered by property insurance required by the Agreement or other property insurance applicable to the Project, except such rights as they have to proceeds of such insurance. The Owner or Contractor, as appropriate, shall require similar written waivers in favor of the individuals and entities identified above from the Architect, Architect's consultants, Separate Contractors, subcontractors, and sub-subcontractors. The policies of insurance purchased and maintained by each person or entity agreeing to waive claims pursuant to this section 11.3.1 shall not prohibit this waiver of subrogation. This waiver of subrogation shall be effective as to a person or entity (1) even though that person or entity would otherwise have a duty of indemnification, contractual or otherwise, (2) even though that person or entity did not pay the insurance premium directly or indirectly, or (3) whether or not the person or entity had an insurable interest in the damaged property.

§ 11.3.2 If during the Project construction period the Owner insures properties, real or personal or both, at or adjacent to the site by property insurance under policies separate from those insuring the Project, or if after final payment property insurance is to be provided on the completed Project through a policy or policies other than those insuring the Project during the construction period, to the extent permissible by such policies, the Owner waives all rights in accordance with the terms of Section 11.3.1 for damages caused by fire or other causes of loss covered by this separate property insurance.

§ 11.4 Loss of Use, Business Interruption, and Delay in Completion Insurance

Init.
/
AIA Document A201® – 2017. Copyright © 1911, 1915, 1918, 1925, 1937, 1951, 1958, 1961, 1963, 1966, 1970, 1976, 1987, 1997, 2007 and 2017 by The American Institute of Architects. All rights reserved. The "American Institute of Architects," "AIA," the AIA Logo, "A201," and "AIA Contract Documents" are registered trademarks and may not be used without permission. This document was produced by AIA software at 16:31:54 ET on 05/19/2022 under Order No.7850528272 which expires on 08/08/2022, is not for resale, is licensed for one-time use only, and may only be used in accordance with the AIA Contract Documents® Terms of Service. To report copyright violations, e-mail copyright@aia.org.
User Notes:
(1818773814)

The Owner, at the Owner's option, may purchase and maintain insurance that will protect the Owner against loss of use of the Owner's property, or the inability to conduct normal operations, due to fire or other causes of loss. The Owner waives all rights of action against the Contractor and Architect for loss of use of the Owner's property, due to fire or other hazards however caused.

§11.5 Adjustment and Settlement of Insured Loss

§ 11.5.1 A loss insured under the property insurance required by the Agreement shall be adjusted by the Owner as fiduciary and made payable to the Owner as fiduciary for the insureds, as their interests may appear, subject to requirements of any applicable mortgagee clause and of Section 11.5.2. The Owner shall pay the Architect and Contractor their just shares of insurance proceeds received by the Owner, and by appropriate agreements the Architect and Contractor shall make payments to their consultants and Subcontractors in similar manner.

§ 11.5.2 Prior to settlement of an insured loss, the Owner shall notify the Contractor of the terms of the proposed settlement as well as the proposed allocation of the insurance proceeds. The Contractor shall have 14 days from receipt of notice to object to the proposed settlement or allocation of the proceeds. If the Contractor does not object, the Owner shall settle the loss and the Contractor shall be bound by the settlement and allocation. Upon receipt, the Owner shall deposit the insurance proceeds in a separate account and make the appropriate distributions. Thereafter, if no other agreement is made or the Owner does not terminate the Contract for convenience, the Owner and Contractor shall execute a Change Order for reconstruction of the damaged or destroyed Work in the amount allocated for that purpose. If the Contractor timely objects to either the terms of the proposed settlement or the allocation of the proceeds, the Owner may proceed to settle the insured loss, and any dispute between the Owner and Contractor arising out of the settlement or allocation of the proceeds shall be resolved pursuant to Article 15. Pending resolution of any dispute, the Owner may issue a Construction Change Directive for the reconstruction of the damaged or destroyed Work.

ARTICLE 12 UNCOVERING AND CORRECTION OF WORK

§ 12.1 Uncovering of Work

§ 12.1.1 If a portion of the Work is covered contrary to the Architect's request or to requirements specifically expressed in the Contract Documents, it must, if requested in writing by the Architect, be uncovered for the Architect's examination and be replaced at the Contractor's expense without change in the Contract Time.

§ 12.1.2 If a portion of the Work has been covered that the Architect has not specifically requested to examine prior to its being covered, the Architect may request to see such Work and it shall be uncovered by the Contractor. If such Work is in accordance with the Contract Documents, the Contractor shall be entitled to an equitable adjustment to the Contract Sum and Contract Time as may be appropriate. If such Work is not in accordance with the Contract Documents, the costs of uncovering the Work, and the cost of correction, shall be at the Contractor's expense.

§ 12.2 Correction of Work

§ 12.2.1 Before Substantial Completion

The Contractor shall promptly correct Work rejected by the Architect or failing to conform to the requirements of the Contract Documents, discovered before Substantial Completion and whether or not fabricated, installed or completed. Costs of correcting such rejected Work, including additional testing and inspections, the cost of uncovering and replacement, and compensation for the Architect's services and expenses made necessary thereby, shall be at the Contractor's expense.

§ 12.2.2 After Substantial Completion

§ 12.2.2.1 In addition to the Contractor's obligations under Section 3.5, if, within one year after the date of Substantial Completion of the Work or designated portion thereof or after the date for commencement of warranties established under Section 9.9.1, or by terms of any applicable special warranty required by the Contract Documents, any of the Work is found to be not in accordance with the requirements of the Contract Documents, the Contractor shall correct it promptly after receipt of notice from the Owner to do so, unless the Owner has previously given the Contractor a written acceptance of such condition. The Owner shall give such notice promptly after discovery of the condition. During the one-year period for correction of Work, if the Owner fails to notify the Contractor and give the Contractor an opportunity to make the correction, the Owner waives the rights to require correction by the Contractor and to make a claim for breach of warranty. If the Contractor fails to correct nonconforming Work within a reasonable time during that period after receipt of notice from the Owner or Architect, the Owner may correct it in accordance with Section 2.5.

Init.
/
AIA Document A201® – 2017. Copyright © 1911, 1915, 1918, 1925, 1937, 1951, 1958, 1961, 1963, 1966, 1970, 1976, 1987, 1997, 2007 and 2017 by The American Institute of Architects. All rights reserved. The "American Institute of Architects," "AIA," the AIA Logo, "A201," and "AIA Contract Documents" are registered trademarks and may not be used without permission. This document was produced by AIA software at 16:31:54 ET on 05/19/2022 under Order No.7850528272 which expires on 08/08/2022, is not for resale, is licensed for one-time use only, and may only be used in accordance with the AIA Contract Documents® Terms of Service. To report copyright violations, e-mail copyright@aia.org.
User Notes:
(1818773814)

§ 12.2.2.2 The one-year period for correction of Work shall be extended with respect to portions of Work first performed after Substantial Completion by the period of time between Substantial Completion and the actual completion of that portion of the Work.

§ 12.2.2.3 The one-year period for correction of Work shall not be extended by corrective Work performed by the Contractor pursuant to this Section 12.2.

§ 12.2.3 The Contractor shall remove from the site portions of the Work that are not in accordance with the requirements of the Contract Documents and are neither corrected by the Contractor nor accepted by the Owner.

§ 12.2.4 The Contractor shall bear the cost of correcting destroyed or damaged construction of the Owner or Separate Contractors, whether completed or partially completed, caused by the Contractor's correction or removal of Work that is not in accordance with the requirements of the Contract Documents.

§ 12.2.5 Nothing contained in this Section 12.2 shall be construed to establish a period of limitation with respect to other obligations the Contractor has under the Contract Documents. Establishment of the one-year period for correction of Work as described in Section 12.2.2 relates only to the specific obligation of the Contractor to correct the Work, and has no relationship to the time within which the obligation to comply with the Contract Documents may be sought to be enforced, nor to the time within which proceedings may be commenced to establish the Contractor's liability with respect to the Contractor's obligations other than specifically to correct the Work.

§ 12.3 Acceptance of Nonconforming Work

If the Owner prefers to accept Work that is not in accordance with the requirements of the Contract Documents, the Owner may do so instead of requiring its removal and correction, in which case the Contract Sum will be reduced as appropriate and equitable. Such adjustment shall be effected whether or not final payment has been made.

ARTICLE 13 MISCELLANEOUS PROVISIONS

§ 13.1 Governing Law

The Contract shall be governed by the law of the place where the Project is located, excluding that jurisdiction's choice of law rules. If the parties have selected arbitration as the method of binding dispute resolution, the Federal Arbitration Act shall govern Section 15.4.

§ 13.2 Successors and Assigns

§ 13.2.1 The Owner and Contractor respectively bind themselves, their partners, successors, assigns, and legal representatives to covenants, agreements, and obligations contained in the Contract Documents. Except as provided in Section 13.2.2, neither party to the Contract shall assign the Contract as a whole without written consent of the other. If either party attempts to make an assignment without such consent, that party shall nevertheless remain legally responsible for all obligations under the Contract.

§ 13.2.2 The Owner may, without consent of the Contractor, assign the Contract to a lender providing construction financing for the Project, if the lender assumes the Owner's rights and obligations under the Contract Documents. The Contractor shall execute all consents reasonably required to facilitate the assignment.

§ 13.3 Rights and Remedies

§ 13.3.1 Duties and obligations imposed by the Contract Documents and rights and remedies available thereunder shall be in addition to and not a limitation of duties, obligations, rights, and remedies otherwise imposed or available by law.

§ 13.3.2 No action or failure to act by the Owner, Architect, or Contractor shall constitute a waiver of a right or duty afforded them under the Contract, nor shall such action or failure to act constitute approval of or acquiescence in a breach thereunder, except as may be specifically agreed upon in writing.

§ 13.4 Tests and Inspections

§ 13.4.1 Tests, inspections, and approvals of portions of the Work shall be made as required by the Contract Documents and by applicable laws, statutes, ordinances, codes, rules, and regulations or lawful orders of public authorities. Unless otherwise provided, the Contractor shall make arrangements for such tests, inspections, and

Init.
/
AIA Document A201® – 2017. Copyright © 1911, 1915, 1918, 1925, 1937, 1951, 1958, 1961, 1963, 1966, 1970, 1976, 1987, 1997, 2007 and 2017 by The American Institute of Architects. All rights reserved. The "American Institute of Architects," "AIA," the AIA Logo, "A201," and "AIA Contract Documents" are registered trademarks and may not be used without permission. This document was produced by AIA software at 16:31:54 ET on 05/19/2022 under Order No.7850528272 which expires on 08/08/2022, is not for resale, is licensed for one-time use only, and may only be used in accordance with the AIA Contract Documents® Terms of Service. To report copyright violations, e-mail copyright@aia.org.
User Notes:
(1818773814)

approvals with an independent testing laboratory or entity acceptable to the Owner, or with the appropriate public authority, and shall bear all related costs of tests, inspections, and approvals. The Contractor shall give the Architect timely notice of when and where tests and inspections are to be made so that the Architect may be present for such procedures. The Owner shall bear costs of tests, inspections, or approvals that do not become requirements until after bids are received or negotiations concluded. The Owner shall directly arrange and pay for tests, inspections, or approvals where building codes or applicable laws or regulations so require.

§ 13.4.2 If the Architect, Owner, or public authorities having jurisdiction determine that portions of the Work require additional testing, inspection, or approval not included under Section 13.4.1, the Architect will, upon written authorization from the Owner, instruct the Contractor to make arrangements for such additional testing, inspection, or approval, by an entity acceptable to the Owner, and the Contractor shall give timely notice to the Architect of when and where tests and inspections are to be made so that the Architect may be present for such procedures. Such costs, except as provided in Section 13.4.3, shall be at the Owner's expense.

§ 13.4.3 If procedures for testing, inspection, or approval under Sections 13.4.1 and 13.4.2 reveal failure of the portions of the Work to comply with requirements established by the Contract Documents, all costs made necessary by such failure, including those of repeated procedures and compensation for the Architect's services and expenses, shall be at the Contractor's expense.

§ 13.4.4 Required certificates of testing, inspection, or approval shall, unless otherwise required by the Contract Documents, be secured by the Contractor and promptly delivered to the Architect.

§ 13.4.5 If the Architect is to observe tests, inspections, or approvals required by the Contract Documents, the Architect will do so promptly and, where practicable, at the normal place of testing.

§ 13.4.6 Tests or inspections conducted pursuant to the Contract Documents shall be made promptly to avoid unreasonable delay in the Work.

§ 13.5 Interest

Payments due and unpaid under the Contract Documents shall bear interest from the date payment is due at the rate the parties agree upon in writing or, in the absence thereof, at the legal rate prevailing from time to time at the place where the Project is located.

ARTICLE 14 TERMINATION OR SUSPENSION OF THE CONTRACT

§ 14.1 Termination by the Contractor

§ 14.1.1 The Contractor may terminate the Contract if the Work is stopped for a period of 30 consecutive days through no act or fault of the Contractor, a Subcontractor, a Sub-subcontractor, their agents or employees, or any other persons or entities performing portions of the Work, for any of the following reasons:

- **.1** Issuance of an order of a court or other public authority having jurisdiction that requires all Work to be stopped;
- **.2** An act of government, such as a declaration of national emergency, that requires all Work to be stopped;
- **.3** Because the Architect has not issued a Certificate for Payment and has not notified the Contractor of the reason for withholding certification as provided in Section 9.4.1, or because the Owner has not made payment on a Certificate for Payment within the time stated in the Contract Documents; or
- **.4** The Owner has failed to furnish to the Contractor reasonable evidence as required by Section 2.2.

§ 14.1.2 The Contractor may terminate the Contract if, through no act or fault of the Contractor, a Subcontractor, a Sub-subcontractor, their agents or employees, or any other persons or entities performing portions of the Work, repeated suspensions, delays, or interruptions of the entire Work by the Owner as described in Section 14.3, constitute in the aggregate more than 100 percent of the total number of days scheduled for completion, or 120 days in any 365-day period, whichever is less.

§ 14.1.3 If one of the reasons described in Section 14.1.1 or 14.1.2 exists, the Contractor may, upon seven days' notice to the Owner and Architect, terminate the Contract and recover from the Owner payment for Work executed, as well as reasonable overhead and profit on Work not executed, and costs incurred by reason of such termination.

AIA Document A201® – 2017. Copyright © 1911, 1915, 1918, 1925, 1937, 1951, 1958, 1961, 1963, 1966, 1970, 1976, 1987, 1997, 2007 and 2017 by The American Institute of Architects. All rights reserved. The "American Institute of Architects," "AIA," the AIA Logo, "A201," and "AIA Contract Documents" are registered trademarks and may not be used without permission. This document was produced by AIA software at 16:31:54 ET on 05/19/2022 under Order No.7850528272 which expires on 08/08/2022, is not for resale, is licensed for one-time use only, and may only be used in accordance with the AIA Contract Documents® Terms of Service. To report copyright violations, e-mail copyright@aia.org.
User Notes: (1818773814)

§ 14.1.4 If the Work is stopped for a period of 60 consecutive days through no act or fault of the Contractor, a Subcontractor, a Sub-subcontractor, or their agents or employees or any other persons or entities performing portions of the Work because the Owner has repeatedly failed to fulfill the Owner's obligations under the Contract Documents with respect to matters important to the progress of the Work, the Contractor may, upon seven additional days' notice to the Owner and the Architect, terminate the Contract and recover from the Owner as provided in Section 14.1.3.

§ 14.2 Termination by the Owner for Cause

§ 14.2.1 The Owner may terminate the Contract if the Contractor

- **.1** repeatedly refuses or fails to supply enough properly skilled workers or proper materials;
- **.2** fails to make payment to Subcontractors or suppliers in accordance with the respective agreements between the Contractor and the Subcontractors or suppliers;
- **.3** repeatedly disregards applicable laws, statutes, ordinances, codes, rules and regulations, or lawful orders of a public authority; or
- **.4** otherwise is guilty of substantial breach of a provision of the Contract Documents.

§ 14.2.2 When any of the reasons described in Section 14.2.1 exist, and upon certification by the Architect that sufficient cause exists to justify such action, the Owner may, without prejudice to any other rights or remedies of the Owner and after giving the Contractor and the Contractor's surety, if any, seven days' notice, terminate employment of the Contractor and may, subject to any prior rights of the surety:

- **.1** Exclude the Contractor from the site and take possession of all materials, equipment, tools, and construction equipment and machinery thereon owned by the Contractor;
- **.2** Accept assignment of subcontracts pursuant to Section 5.4; and
- **.3** Finish the Work by whatever reasonable method the Owner may deem expedient. Upon written request of the Contractor, the Owner shall furnish to the Contractor a detailed accounting of the costs incurred by the Owner in finishing the Work.

§ 14.2.3 When the Owner terminates the Contract for one of the reasons stated in Section 14.2.1, the Contractor shall not be entitled to receive further payment until the Work is finished.

§ 14.2.4 If the unpaid balance of the Contract Sum exceeds costs of finishing the Work, including compensation for the Architect's services and expenses made necessary thereby, and other damages incurred by the Owner and not expressly waived, such excess shall be paid to the Contractor. If such costs and damages exceed the unpaid balance, the Contractor shall pay the difference to the Owner. The amount to be paid to the Contractor or Owner, as the case may be, shall be certified by the Initial Decision Maker, upon application, and this obligation for payment shall survive termination of the Contract.

§ 14.3 Suspension by the Owner for Convenience

§ 14.3.1 The Owner may, without cause, order the Contractor in writing to suspend, delay or interrupt the Work, in whole or in part for such period of time as the Owner may determine.

§ 14.3.2 The Contract Sum and Contract Time shall be adjusted for increases in the cost and time caused by suspension, delay, or interruption under Section 14.3.1. Adjustment of the Contract Sum shall include profit. No adjustment shall be made to the extent

- **.1** that performance is, was, or would have been, so suspended, delayed, or interrupted, by another cause for which the Contractor is responsible; or
- **.2** that an equitable adjustment is made or denied under another provision of the Contract.

§ 14.4 Termination by the Owner for Convenience

§ 14.4.1 The Owner may, at any time, terminate the Contract for the Owner's convenience and without cause.

§ 14.4.2 Upon receipt of notice from the Owner of such termination for the Owner's convenience, the Contractor shall

- **.1** cease operations as directed by the Owner in the notice;
- **.2** take actions necessary, or that the Owner may direct, for the protection and preservation of the Work; and
- **.3** except for Work directed to be performed prior to the effective date of termination stated in the notice, terminate all existing subcontracts and purchase orders and enter into no further subcontracts and purchase orders.

AIA Document A201® – 2017. Copyright © 1911, 1915, 1918, 1925, 1937, 1951, 1958, 1961, 1963, 1966, 1970, 1976, 1987, 1997, 2007 and 2017 by The American Institute of Architects. All rights reserved. The "American Institute of Architects," "AIA," the AIA Logo, "A201," and "AIA Contract Documents" are registered trademarks and may not be used without permission. This document was produced by AIA software at 16:31:54 ET on 05/19/2022 under Order No.7850528272 which expires on 08/08/2022, is not for resale, is licensed for one-time use only, and may only be used in accordance with the AIA Contract Documents® Terms of Service. To report copyright violations, e-mail copyright@aia.org.
User Notes:
(1818773814)

§ 14.4.3 In case of such termination for the Owner's convenience, the Owner shall pay the Contractor for Work properly executed; costs incurred by reason of the termination, including costs attributable to termination of Subcontracts; and the termination fee, if any, set forth in the Agreement.

ARTICLE 15 CLAIMS AND DISPUTES

§ 15.1 Claims

§ 15.1.1 Definition

A Claim is a demand or assertion by one of the parties seeking, as a matter of right, payment of money, a change in the Contract Time, or other relief with respect to the terms of the Contract. The term "Claim" also includes other disputes and matters in question between the Owner and Contractor arising out of or relating to the Contract. The responsibility to substantiate Claims shall rest with the party making the Claim. This Section 15.1.1 does not require the Owner to file a Claim in order to impose liquidated damages in accordance with the Contract Documents.

§ 15.1.2 Time Limits on Claims

The Owner and Contractor shall commence all Claims and causes of action against the other and arising out of or related to the Contract, whether in contract, tort, breach of warranty or otherwise, in accordance with the requirements of the binding dispute resolution method selected in the Agreement and within the period specified by applicable law, but in any case not more than 10 years after the date of Substantial Completion of the Work. The Owner and Contractor waive all Claims and causes of action not commenced in accordance with this Section 15.1.2.

§ 15.1.3 Notice of Claims

§ 15.1.3.1 Claims by either the Owner or Contractor, where the condition giving rise to the Claim is first discovered prior to expiration of the period for correction of the Work set forth in Section 12.2.2, shall be initiated by notice to the other party and to the Initial Decision Maker with a copy sent to the Architect, if the Architect is not serving as the Initial Decision Maker. Claims by either party under this Section 15.1.3.1 shall be initiated within 21 days after occurrence of the event giving rise to such Claim or within 21 days after the claimant first recognizes the condition giving rise to the Claim, whichever is later.

§ 15.1.3.2 Claims by either the Owner or Contractor, where the condition giving rise to the Claim is first discovered after expiration of the period for correction of the Work set forth in Section 12.2.2, shall be initiated by notice to the other party. In such event, no decision by the Initial Decision Maker is required.

§ 15.1.4 Continuing Contract Performance

§ 15.1.4.1 Pending final resolution of a Claim, except as otherwise agreed in writing or as provided in Section 9.7 and Article 14, the Contractor shall proceed diligently with performance of the Contract and the Owner shall continue to make payments in accordance with the Contract Documents.

§ 15.1.4.2 The Contract Sum and Contract Time shall be adjusted in accordance with the Initial Decision Maker's decision, subject to the right of either party to proceed in accordance with this Article 15. The Architect will issue Certificates for Payment in accordance with the decision of the Initial Decision Maker.

§ 15.1.5 Claims for Additional Cost

If the Contractor wishes to make a Claim for an increase in the Contract Sum, notice as provided in Section 15.1.3 shall be given before proceeding to execute the portion of the Work that is the subject of the Claim. Prior notice is not required for Claims relating to an emergency endangering life or property arising under Section 10.4.

§ 15.1.6 Claims for Additional Time

§ 15.1.6.1 If the Contractor wishes to make a Claim for an increase in the Contract Time, notice as provided in Section 15.1.3 shall be given. The Contractor's Claim shall include an estimate of cost and of probable effect of delay on progress of the Work. In the case of a continuing delay, only one Claim is necessary.

§ 15.1.6.2 If adverse weather conditions are the basis for a Claim for additional time, such Claim shall be documented by data substantiating that weather conditions were abnormal for the period of time, could not have been reasonably anticipated, and had an adverse effect on the scheduled construction.

Init.
/

AIA Document A201® – 2017. Copyright © 1911, 1915, 1918, 1925, 1937, 1951, 1958, 1961, 1963, 1966, 1970, 1976, 1987, 1997, 2007 and 2017 by The American Institute of Architects. All rights reserved. The "American Institute of Architects," "AIA," the AIA Logo, "A201," and "AIA Contract Documents" are registered trademarks and may not be used without permission. This document was produced by AIA software at 16:31:54 ET on 05/19/2022 under Order No.7850528272 which expires on 08/08/2022, is not for resale, is licensed for one-time use only, and may only be used in accordance with the AIA Contract Documents® Terms of Service. To report copyright violations, e-mail copyright@aia.org.
User Notes:
(1818773814)

§ 15.1.7 Waiver of Claims for Consequential Damages

The Contractor and Owner waive Claims against each other for consequential damages arising out of or relating to this Contract. This mutual waiver includes

.1 damages incurred by the Owner for rental expenses, for losses of use, income, profit, financing, business and reputation, and for loss of management or employee productivity or of the services of such persons; and

.2 damages incurred by the Contractor for principal office expenses including the compensation of personnel stationed there, for losses of financing, business and reputation, and for loss of profit, except anticipated profit arising directly from the Work.

This mutual waiver is applicable, without limitation, to all consequential damages due to either party's termination in accordance with Article 14. Nothing contained in this Section 15.1.7 shall be deemed to preclude assessment of liquidated damages, when applicable, in accordance with the requirements of the Contract Documents.

§ 15.2 Initial Decision

§ 15.2.1 Claims, excluding those where the condition giving rise to the Claim is first discovered after expiration of the period for correction of the Work set forth in Section 12.2.2 or arising under Sections 10.3, 10.4, and 11.5, shall be referred to the Initial Decision Maker for initial decision. The Architect will serve as the Initial Decision Maker, unless otherwise indicated in the Agreement. Except for those Claims excluded by this Section 15.2.1, an initial decision shall be required as a condition precedent to mediation of any Claim. If an initial decision has not been rendered within 30 days after the Claim has been referred to the Initial Decision Maker, the party asserting the Claim may demand mediation and binding dispute resolution without a decision having been rendered. Unless the Initial Decision Maker and all affected parties agree, the Initial Decision Maker will not decide disputes between the Contractor and persons or entities other than the Owner.

§ 15.2.2 The Initial Decision Maker will review Claims and within ten days of the receipt of a Claim take one or more of the following actions: (1) request additional supporting data from the claimant or a response with supporting data from the other party, (2) reject the Claim in whole or in part, (3) approve the Claim, (4) suggest a compromise, or (5) advise the parties that the Initial Decision Maker is unable to resolve the Claim if the Initial Decision Maker lacks sufficient information to evaluate the merits of the Claim or if the Initial Decision Maker concludes that, in the Initial Decision Maker's sole discretion, it would be inappropriate for the Initial Decision Maker to resolve the Claim.

§ 15.2.3 In evaluating Claims, the Initial Decision Maker may, but shall not be obligated to, consult with or seek information from either party or from persons with special knowledge or expertise who may assist the Initial Decision Maker in rendering a decision. The Initial Decision Maker may request the Owner to authorize retention of such persons at the Owner's expense.

§ 15.2.4 If the Initial Decision Maker requests a party to provide a response to a Claim or to furnish additional supporting data, such party shall respond, within ten days after receipt of the request, and shall either (1) provide a response on the requested supporting data, (2) advise the Initial Decision Maker when the response or supporting data will be furnished, or (3) advise the Initial Decision Maker that no supporting data will be furnished. Upon receipt of the response or supporting data, if any, the Initial Decision Maker will either reject or approve the Claim in whole or in part.

§ 15.2.5 The Initial Decision Maker will render an initial decision approving or rejecting the Claim, or indicating that the Initial Decision Maker is unable to resolve the Claim. This initial decision shall (1) be in writing; (2) state the reasons therefor; and (3) notify the parties and the Architect, if the Architect is not serving as the Initial Decision Maker, of any change in the Contract Sum or Contract Time or both. The initial decision shall be final and binding on the parties but subject to mediation and, if the parties fail to resolve their dispute through mediation, to binding dispute resolution.

§ 15.2.6 Either party may file for mediation of an initial decision at any time, subject to the terms of Section 15.2.6.1.

§ 15.2.6.1 Either party may, within 30 days from the date of receipt of an initial decision, demand in writing that the other party file for mediation. If such a demand is made and the party receiving the demand fails to file for mediation within 30 days after receipt thereof, then both parties waive their rights to mediate or pursue binding dispute resolution proceedings with respect to the initial decision.

AIA Document A201® – 2017. Copyright © 1911, 1915, 1918, 1925, 1937, 1951, 1958, 1961, 1963, 1966, 1970, 1976, 1987, 1997, 2007 and 2017 by The American Institute of Architects. All rights reserved. The "American Institute of Architects," "AIA," the AIA Logo, "A201," and "AIA Contract Documents" are registered trademarks and may not be used without permission. This document was produced by AIA software at 16:31:54 ET on 05/19/2022 under Order No.7850528272 which expires on 08/08/2022, is not for resale, is licensed for one-time use only, and may only be used in accordance with the AIA Contract Documents® Terms of Service. To report copyright violations, e-mail copyright@aia.org.
User Notes:
(1818773814)

§ 15.2.7 In the event of a Claim against the Contractor, the Owner may, but is not obligated to, notify the surety, if any, of the nature and amount of the Claim. If the Claim relates to a possibility of a Contractor's default, the Owner may, but is not obligated to, notify the surety and request the surety's assistance in resolving the controversy.

§ 15.2.8 If a Claim relates to or is the subject of a mechanic's lien, the party asserting such Claim may proceed in accordance with applicable law to comply with the lien notice or filing deadlines.

§ 15.3 Mediation

§ 15.3.1 Claims, disputes, or other matters in controversy arising out of or related to the Contract, except those waived as provided for in Sections 9.10.4, 9.10.5, and 15.1.7, shall be subject to mediation as a condition precedent to binding dispute resolution.

§ 15.3.2 The parties shall endeavor to resolve their Claims by mediation which, unless the parties mutually agree otherwise, shall be administered by the American Arbitration Association in accordance with its Construction Industry Mediation Procedures in effect on the date of the Agreement. A request for mediation shall be made in writing, delivered to the other party to the Contract, and filed with the person or entity administering the mediation. The request may be made concurrently with the filing of binding dispute resolution proceedings but, in such event, mediation shall proceed in advance of binding dispute resolution proceedings, which shall be stayed pending mediation for a period of 60 days from the date of filing, unless stayed for a longer period by agreement of the parties or court order. If an arbitration is stayed pursuant to this Section 15.3.2, the parties may nonetheless proceed to the selection of the arbitrator(s) and agree upon a schedule for later proceedings.

§ 15.3.3 Either party may, within 30 days from the date that mediation has been concluded without resolution of the dispute or 60 days after mediation has been demanded without resolution of the dispute, demand in writing that the other party file for binding dispute resolution. If such a demand is made and the party receiving the demand fails to file for binding dispute resolution within 60 days after receipt thereof, then both parties waive their rights to binding dispute resolution proceedings with respect to the initial decision.

§ 15.3.4 The parties shall share the mediator's fee and any filing fees equally. The mediation shall be held in the place where the Project is located, unless another location is mutually agreed upon. Agreements reached in mediation shall be enforceable as settlement agreements in any court having jurisdiction thereof.

§ 15.4 Arbitration

§ 15.4.1 If the parties have selected arbitration as the method for binding dispute resolution in the Agreement, any Claim subject to, but not resolved by, mediation shall be subject to arbitration which, unless the parties mutually agree otherwise, shall be administered by the American Arbitration Association in accordance with its Construction Industry Arbitration Rules in effect on the date of the Agreement. The Arbitration shall be conducted in the place where the Project is located, unless another location is mutually agreed upon. A demand for arbitration shall be made in writing, delivered to the other party to the Contract, and filed with the person or entity administering the arbitration. The party filing a notice of demand for arbitration must assert in the demand all Claims then known to that party on which arbitration is permitted to be demanded.

§ 15.4.1.1 A demand for arbitration shall be made no earlier than concurrently with the filing of a request for mediation, but in no event shall it be made after the date when the institution of legal or equitable proceedings based on the Claim would be barred by the applicable statute of limitations. For statute of limitations purposes, receipt of a written demand for arbitration by the person or entity administering the arbitration shall constitute the institution of legal or equitable proceedings based on the Claim.

§ 15.4.2 The award rendered by the arbitrator or arbitrators shall be final, and judgment may be entered upon it in accordance with applicable law in any court having jurisdiction thereof.

§ 15.4.3 The foregoing agreement to arbitrate and other agreements to arbitrate with an additional person or entity duly consented to by parties to the Agreement, shall be specifically enforceable under applicable law in any court having jurisdiction thereof.

AIA Document A201® – 2017. Copyright © 1911, 1915, 1918, 1925, 1937, 1951, 1958, 1961, 1963, 1966, 1970, 1976, 1987, 1997, 2007 and 2017 by The American Institute of Architects. All rights reserved. The "American Institute of Architects," "AIA," the AIA Logo, "A201," and "AIA Contract Documents" are registered trademarks and may not be used without permission. This document was produced by AIA software at 16:31:54 ET on 05/19/2022 under Order No.7850528272 which expires on 08/08/2022, is not for resale, is licensed for one-time use only, and may only be used in accordance with the AIA Contract Documents® Terms of Service. To report copyright violations, e-mail copyright@aia.org.
User Notes:
(1818773814)

§ 15.4.4 Consolidation or Joinder

§ 15.4.4.1 Subject to the rules of the American Arbitration Association or other applicable arbitration rules, either party may consolidate an arbitration conducted under this Agreement with any other arbitration to which it is a party provided that (1) the arbitration agreement governing the other arbitration permits consolidation, (2) the arbitrations to be consolidated substantially involve common questions of law or fact, and (3) the arbitrations employ materially similar procedural rules and methods for selecting arbitrator(s).

§ 15.4.4.2 Subject to the rules of the American Arbitration Association or other applicable arbitration rules, either party may include by joinder persons or entities substantially involved in a common question of law or fact whose presence is required if complete relief is to be accorded in arbitration, provided that the party sought to be joined consents in writing to such joinder. Consent to arbitration involving an additional person or entity shall not constitute consent to arbitration of any claim, dispute or other matter in question not described in the written consent.

§ 15.4.4.3 The Owner and Contractor grant to any person or entity made a party to an arbitration conducted under this Section 15.4, whether by joinder or consolidation, the same rights of joinder and consolidation as those of the Owner and Contractor under this Agreement.

AIA Document A201® – 2017. Copyright © 1911, 1915, 1918, 1925, 1937, 1951, 1958, 1961, 1963, 1966, 1970, 1976, 1987, 1997, 2007 and 2017 by The American Institute of Architects. All rights reserved. The "American Institute of Architects," "AIA," the AIA Logo, "A201," and "AIA Contract Documents" are registered trademarks and may not be used without permission. This document was produced by AIA software at 16:31:54 ET on 05/19/2022 under Order No.7850528272 which expires on 08/08/2022, is not for resale, is licensed for one-time use only, and may only be used in accordance with the AIA Contract Documents® Terms of Service. To report copyright violations, e-mail copyright@aia.org.
User Notes:
(1818773814)

Additions and Deletions Report for
AIA® Document A201® – 2017

This Additions and Deletions Report, as defined on page 1 of the associated document, reproduces below all text the author has added to the standard form AIA document in order to complete it, as well as any text the author may have added to or deleted from the original AIA text. Added text is shown underlined. Deleted text is indicated with a horizontal line through the original AIA text.

Note: This Additions and Deletions Report is provided for information purposes only and is not incorporated into or constitute any part of the associated AIA document. This Additions and Deletions Report and its associated document were generated simultaneously by AIA software at 16:31:54 ET on 05/19/2022.

PAGE 1

Hennessey Fire Department
Hennessey, Oklahoma

...

Kingfisher County Commissioners
101 S. Main St. #9
Kingfisher, Oklahoma 73750

...

(Name, legal status and address)

Architects in Partnership, LLC
3220 Marshall Avenue
Norman, Oklahoma 73072
Telephone Number: (405) 360-1300
Fax Number: (405) 360-1431

Additions and Deletions Report for AIA Document A201® – 2017. Copyright © 1911, 1915, 1918, 1925, 1937, 1951, 1958, 1961, 1963, 1966, 1970, 1976, 1987, 1997, 2007 and 2017 by The American Institute of Architects. All rights reserved. The "American Institute of Architects," "AIA," the AIA Logo, "A201," and "AIA Contract Documents" are registered trademarks and may not be used without permission. This document was produced by AIA software at 16:31:54 ET on 05/19/2022 under Order No.7850528272 which expires on 08/08/2022, is not for resale, is licensed for one-time use only, and may only be used in accordance with the AIA Contract Documents® Terms of Service. To report copyright violations, e-mail copyright@aia.org.
User Notes: (1818773814)

Certification of Document's Authenticity

AIA® Document D401™ – 2003

I, Gang Li, hereby certify, to the best of my knowledge, information and belief, that I created the attached final document simultaneously with its associated Additions and Deletions Report and this certification at 16:31:54 ET on 05/19/2022 under Order No. 7850528272 from AIA Contract Documents software and that in preparing the attached final document I made no changes to the original text of AIA® Document A201™ – 2017, General Conditions of the Contract for Construction, as published by the AIA in its software, other than those additions and deletions shown in the associated Additions and Deletions Report.

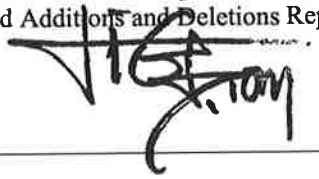

(Signed)

Principal

(Title)

5.19.22

(Dated)

AIA Document D401™ – 2003. Copyright © 1992 and 2003 by The American Institute of Architects. All rights reserved. The "American Institute of Architects," "AIA," the AIA Logo, and "AIA Contract Documents" are registered trademarks and may not be used without permission. This document was produced by AIA software at 16:31:54 ET on 05/19/2022 under Order No.7850528272 which expires on 08/08/2022, is not for resale, is licensed for one-time use only, and may only be used in accordance with the AIA Contract Documents® Terms of Service. To report copyright violations, e-mail copyright@aia.org.
User Notes: (1818773814)

PART 1 - GENERAL

1.01 SUMMARY

A. These Supplementary Conditions amend and supplement the General Conditions defined in Document 00 72 00 - General Conditions and other provisions of the Contract Documents as indicated below. Provisions that are not so amended or supplemented remain in full force and effect.

B. The terms used in these Supplementary Conditions that are defined in the General Conditions have the meanings assigned to them in the General Conditions.

1.02 RELATED SECTIONS

A. Section 00 50 00 - Contracting Forms and Supplements.

B. Section 01 42 00 - References.

1.03 REFERENCE STANDARDS

A. AIA A503 - Guide for Supplementary Conditions; 2017.

1.04 MODIFICATIONS TO GENERAL CONDITIONS

A. The following supplements modify AIA Document A201-2017, General Conditions of the Contract for Construction. Where a portion of the General Conditions is modified or deleted by these Supplementary Conditions, the unaltered portions of the General Conditions shall remain in effect.

1.05 ARTICLE 1 - GENERAL PROVISIONS:

A. Add new Clause 1.1.1.1 to Subparagraph 1.1.1 THE CONTRACT DOCUMENTS immediately following Subparagraph 1.1.1 to read as follows:

1.1.1.1 The Owner has prepared a Subsoil Investigation Report on the project site. This report shall not be deemed to be a part of the Contract Documents. As a convenience to Bidders and the Contractor, this report is on file and may be examined at the Office of the Architect during normal business hours or it may be bound within the specifications.

B. The fourth sentence of Subparagraph 1.1.2 THE CONTRACT shall be modified to read as follows:

The Contract Documents shall not be construed to create a contractual relationship of any kind (1) between the Contractor and the Architect or the Architect’s consultants, (2) between any Subcontractor, Sub-subcontractor or a Material Supplier and the Architect or the Architect’s consultants, (3) between the Owner and a Subcontractor, Sub subcontractor, or a Material Supplier (4) between the Owner and Architect or the Architect’s consultants, or (5) between any persons or entities other than the Owner and Contractor.

C. Add new Clause 1.1.3.1 to Subparagraph 1.1.3 THE WORK to read as follows:

1.1.3.1 It is agreed that the definition of the term "Work" for the purposes of the Architect's observations of the Work shall not include temporary shoring, bracing, scaffolding, form work, safety barriers, trench bracing and other similar items referred to herein as "temporary facilities," material moving equipment to include cranes and elevators, or any other temporary structures or construction equipment or aids, for which the Contractor shall have sole responsibility.

D. Add the following sentence to the end of Subparagraph 1.1.6 THE SPECIFICATIONS:

Other items or requirements related to the Work or the Project may also be included in the Specifications.

E. Add new Subparagraph 1.1.9 to Paragraph 1.1 BASIC DEFINITIONS immediately following Subparagraph 1.1.8 INITIAL DECISION MAKER to read as follows:

1.1.9 THE PROJECT SITE

The Project Site is the tract of ground upon which the Project is to be situated and is generally defined on the Plot Plan or Site Plan Drawing. The Project may be located on more than one Project Sites which may be located remote from each other.

F. Add the following sentences at the end of Subparagraph 1.2.2:

Organization of the Drawings and Specifications into a format for easy cross reference by any person or entity is for the specific purpose of convenience only and such cross references shall not be considered as being full and complete. The omission of any cross reference shall not relieve the Contractor of his responsibility to perform all of the Work required by the Contract Documents.

G. Add new Subparagraph 1.2.4 to Paragraph 1.2 CORRELATION AND INTENT OF THE CONTRACT

DOCUMENTS immediately following Subparagraph 1.2.3 to read as follows:

1.2.4 All of the Contract Documents are complementary and do not have a system of precedence. In the event of conflicts or discrepancies among the separate parts of the Contract Documents, or within any one part of the Contract Documents, and subject to the terms of Subparagraph 3.2.1 and Supplementary Clause 3.2.1.1, the Architect shall upon request from the Owner, or Contractor, consistent with Subparagraphs 4.2.11 and 4.2.12, interpret the conflict or discrepancy based upon the Contract Documents as a whole. Should such a conflict or discrepancy occur, it is the specific intent of the Contract Documents to require the better quality or greater quantity of Work be performed and the Architects interpretation shall be consistent with this intent.

H. Add the following sentence at the end of Paragraph 1.3:

The capitalization of other words or terms, or the failure to capitalize any word or term, throughout the Contract Documents, shall be interpreted to have no meaning and shall be without effect on all interpretations of the Contract Documents.

1.06 ARTICLE 2 - OWNER

A. Subparagraph 2.3.4 shall be revised to read as follows:

The Owner shall furnish surveys describing the Project Site. The Architect makes no representations to the accuracy or completeness of these surveys. Such surveys may contain descriptions of physical characteristics, legal limitations, utility locations, permanent benchmarks, existing structures, slopes and contours, legal descriptions and other such pertinent information. Such Owner furnished surveys may be bound with the Drawings or may be fully or partially transcribed onto the Plot Plan or Site Plan Drawing. This survey shall be a part of the Drawings and, as such, shall be a part of the Contract Documents.

B. Add new Subparagraph 2.3.7 immediately following Subparagraph 2.3.6 to read as follows:

2.3.7 The Owner's instructions to the Contractor shall be communicated through the Architect.

C. Add new Subparagraph 2.4.1 to Paragraph 2.4 OWNER'S RIGHT TO STOP WORK to read as follows:

2.4.1 The Owners right to stop the Work shall not imply that the Owner, or the Architect, has any duty, obligation or responsibility to determine either the safety of the Contractors means, methods, techniques or sequences, including but not limited to, temporary shoring, bracing, scaffolding, form work, safety barriers, trench bracing, and other similar items, referred to herein as "temporary facilities," or their compliance with the requirements of laws, codes, regulations and safety requirements, which shall be the full and sole responsibility of the Contractor and the Contractor shall solely bear any damages or injury, including death, arising therefrom.

D. Add new Subparagraph 2.5.1 to Paragraph 2.5 OWNER'S RIGHT TO CARRY OUT THE WORK to read as follows:

2.5.1 Should the Contractor fail or refuse to sign the Change Order, and should the Contractor not give written notice of his specific reasons within a seven (7) day period after his receipt of the Change Order, or should the Contractor not accept delivery of the Change Order, a Construction Change Directive for a like amount shall be issued in compliance with Paragraph 7.3 CONSTRUCTION CHANGE DIRECTIVES.

1.07 ARTICLE 3 - CONTRACTOR

A. Revise words "ANY ERRORS" in the second sentence of Subparagraph 3.2.2 to read as follows:

"any open, obvious or patent errors"

B. Add new Clause 3.2.2.1 immediately following Subparagraph 3.2.2 to read as follows:

3.2.1.1 During his careful study as required in Subparagraph 3.2.2, the Contractor shall note all typographical and spelling errors in the Construction Documents. Any such errors which produce a phrase or sentence in compliance with both well-known technical and trade meanings and common English usage shall not be deemed a typographical or spelling error. All other such typographical or spelling errors will produce phrases or sentences which are inconsistent with well-known technical and trade meanings or common English usage. The Contractor shall report all such errors to the Architect in compliance with Subparagraph 3.2.2.

C. Revise words "ANY NONCONFORMITY" in the Subparagraph 3.2.3 to read as follows:

"any open, obvious or patent nonconformity"

D. The third sentence of Subparagraph 3.2.4 shall be modified to read as follows:

"The Contractor shall not be liable to the Owner or Architect for damages resulting from errors, inconsistencies or omissions in the Contract Documents or for differences between field measurements or conditions and the Contract Documents unless such errors inconsistencies, omissions or differences were open, obvious or patent and should have been discovered by Contractor during a careful examination of

the various Drawings and other Contract Documents.

E. The second sentence of Subparagraph 3.3.1 shall be modified by adding the words "temporary facilities and safety precautions and programs" immediately following the word "techniques." The second sentence shall be additionally modified by deleting the words, "unless the Contract Documents give other specific instructions concerning these matters."

F. Add new Clause 3.4.3.1 immediately following Subparagraph 3.4.3 to read as follows:

3.4.3.1. The Contractor shall adopt and maintain a policy strictly prohibiting social contact between the employees of the Contractor, Subcontractors, Sub-subcontractors, Material Suppliers or any other persons for whose acts the Contractor is responsible and any students, regardless of age, or underage employees of the Owner on or around the Project Site. All applicable employees shall be informed of this policy by the Contractor and the Superintendent of the Contractor shall be responsible for enforcement of this policy.

G. Add new Subparagraph 3.4.4 to read as follows:

3.4.4 After the Contract has been executed, the Owner will consider a formal request for the substitution of products, systems, means, methods or designs in place of those specified only under the conditions set forth in the Additional Project Requirements of Division C of the Contract Documents. By making requests for substitutions based upon this Subparagraph, the Contractor represents and certifies that:

1. He has personally investigated the proposed substitute products, systems, means, methods or designs and has determined that it is equal or superior in all respects to that specified;

2. He will provide the same warranty for the substitution that the Contractor would for that specified;

3. The cost data presented is complete and includes all related costs under this Contract except the Architects redesign costs, and waives all claims for additional costs related to the substitution which subsequently become apparent;

4. He will coordinate the installation of the accepted substitute, making such changes as may be required for the Work to be complete in all respects.

H. Add new Subparagraph 3.6.1 to read as follows:

3.6.1 Certain Public and Non Profit Organization Owners may be exempt, either wholly or partially, from taxes as defined in Subparagraph 3.6. Where applicable, these exemptions are fully described elsewhere in the Contract Documents.

I. Subparagraph 3.7.2 shall be modified by adding the following sentences to the end of Subparagraph:

Compliance with one or more specific laws, ordinances, rules, regulations and lawful orders of public authorities may be brought to the Contractors specific attention elsewhere in the Contract Documents. The inclusion or omission of any law, ordinance, rule, regulation or lawful order of a public authority shall not relieve the Contractor of his duty, obligation and responsibility for compliance with all laws, ordinances, rules, regulations and lawful orders of public authorities.

J. Add new Clause 3.7.2.1 immediately following Subparagraph 3.7.2 to read as follows:

3.7.2.1 In general, it is not the Contractor's responsibility to ascertain that the Contract Documents are in accordance with applicable laws, ordinances, statutes, standards, building codes, rules and regulations. However, building trades licensed by regulatory authority shall be held responsible for full and complete knowledge of all applicable laws, ordinances, statues, standards, building codes, rules and regulations as they apply to their own licensed trade. Where the Contract Documents specifically direct that portions of the Work be completed in compliance with certain or applicable laws, ordinances, statues, standards, building codes, rules and regulations, it is the Contractor's duty, obligation and responsibility to diligently and carefully research and study, and to acquire full knowledge of, such laws, ordinances, statutes, standards, building codes, rules and regulations. If the Contractor observes that portions of the Contract Documents are at variance from applicable laws, ordinances, statues, standards, building codes, rules and regulations, or is informed of such variance by any public authority or other entity, the Contractor shall promptly notify the Architect in writing, and necessary changes shall be accomplished by appropriate Modification. Nothing in these requirements shall relieve the Contractor of his responsibility for compliance with the requirements of the Contract Documents where those requirements exceed those of the applicable laws, ordinances, statutes, standards, building codes, rules and regulations.

K. Add the following sentence at the end of Subparagraph 3.7.3:

Claims for additional cost will not be approved by the Owner for changes required to comply with applicable laws, ordinances, statutes, standards, building codes, rules and regulations for those portions

of the Work for which the Contractor is required by the Contract for Construction to have knowledge of the applicable laws, ordinances, statues, standards, building codes, rules and regulations.

L. Add new Subparagraph 3.7.6 immediately following Subparagraph 3.7.5 to read as follows:

3.7.6 Applicable laws, ordinances, statutes, standards, building codes, rules and regulations are defined as those laws, ordinances, statutes, standards, building codes, rules and regulations which are in effect on the Bid Date as defined in the Invitation or Advertisement to Bid. Should any applicable law, ordinance, statute, standard, building code, rule or regulation, or interpretation thereof, change during the progress of the Work, and should any such change require the Contractor to perform either more or less work, the Contract Sum and Contract Time shall be appropriately adjusted in compliance with the requirements of ARTICLE 7, CHANGES IN THE WORK.

M. The first sentence of Subparagraph 3.9.1 shall be modified by adding the words "on a full time basis" immediately after the word "attendance".

N. Add new Subparagraph 3.10.4 immediately following Subparagraph 3.10.3 to read as follows:

3.10.4 Nothing in the requirement to submit construction schedules, or to revise such schedules, or any review of such schedules by the Owner or Architect, shall give rise to a duty, obligation or responsibility of the Owner or Architect to any Contractor, Subcontractor, Sub subcontractor, Material Supplier, or any other entity involved in the Work, to insure completion of the Work within the Contract Time. It is the sole duty, responsibility and obligation of the Contractor to complete the Work within the Contract Time.

O. The second sentence of Subparagraph 3.12.8 shall be modified to read as follows:

Specifically informing the Architect in writing of deviations shall be defined as a letter submitted with the Shop Drawing, Product Data, Sample or similar submittal which shall contain the following phrase, "Your attention is directed to the following deviations from the Requirements of the Contract Documents" followed by a detailed written listing of all such deviations. The Contractor shall not be relieved of responsibility for errors or omissions in Shop Drawings, Product Data, Samples or similar submittals by the Architect's approval thereof. Any portion of the Work which fails to conform to the requirements of the Contract Documents shall be corrected in compliance with Article 12 UNCOVERING AND CORRECTION OF WORK and the Architect's approval of Shop Drawings, Product Data, Samples or similar submittals shall not relieve the Contractor of his duty, obligation and responsibility to make any such required corrections.

P. Add the following sentence to the end of Subparagraph 3.12.9:

Specific attention in writing shall be defined as a letter submitted with the Shop Drawings, Product Data, Sample or similar submittal which shall contain the following phrase, "Your attention is directed to the following revisions which are in addition to those revisions that you requested" followed by a detailed written listing of all such revisions.

Q. Add new Subparagraph 3.12.11 immediately following Clause 3.12.10.2 to read as follows:

3.12.11 Letters of Conformance will not be acceptable in lieu of Shop Drawings or other required submittals.

1.08 ARTICLE 4 - ARCHITECT

A. Add new Clause 4.2.1.1 immediately following Subparagraph 4.2.1 to read as follows:

4.2.1.1 Nothing in the Agreement shall be construed to mean or to imply that the Architect has any duty, obligation or responsibility to supervise the Work.

B. The first sentence of Subparagraph 4.2.2 shall be modified by adding the words "as a whole" immediately after the words "will visit the site."

C. The third sentence of Subparagraph 4.2.2 shall be modified by adding the words "temporary facilities" immediately following the word "techniques".

D. Add new Clauses 4.2.2.1, 4.2.2.2 and 4.2.2.3 immediately following Subparagraph 4.2.2 to read as follows:

4.2.2.1 It is understood that the Architect's observations of the Work shall be conducted on a sampling basis and that the observed samples of the Work, at the time observed, may not be representative of all work by the Contractor in terms of quality and quantity.

4.2.2.2 Nothing in the Agreement shall be construed to mean or to imply:

1. That the Architect has any duty, obligation or responsibility to observe the work of any individual Subcontractor, Sub subcontractor, Tradesman, Material Supplier or other person or entity during the progress of that Subcontractor's, Sub Subcontractors, Tradesmen, Material Suppliers or other persons or entities Work.

2. That the Architect has any duty, obligation or responsibility to observe, note and report to the Contractor every discrepancy, error, instance of work of poor quality and

variances from the requirements of the Contract Documents which may be present during any period of observation of the Work. The Architect's failure to observe, note and report to the Contractor any discrepancy, error, instance of work of poor quality or variance from the requirements of the Contract Documents shall not relieve the Contractor of his obligation to perform the work in accordance with the Contract Documents.

3. That the Architect has any duty, obligation or responsibility to observe, note and report to the Contractor any discrepancy, error, instance of work of poor quality or variance from the requirements of the Contract Documents at any specific time or period during the progress of the Work. Work shall be corrected under the requirements of Article 12 UNCOVERING AND CORRECTION OF WORK without respect to the time or period when the Work requiring correction was discovered and reported to the Contractor.

4. That the Architect has any duty, obligation or responsibility to protect the Contractor or any Subcontractor, Sub Subcontractor, Material Supplier or other person or entity involved in the Work against their own construction errors or other variance from the requirements of the Contract Documents during his observations of the Work.

5. That the Architect has any duty, obligation or responsibility to verify the accuracy of Documents and Samples at the Project Site as defined in Subparagraph 3.11.

6. That the Architect has any duty, obligation or responsibility to observe those portions of the Work excluded from the definition of the term "Work" in Clause 1.1.3.1

4.2.2.3 Nothing in the Agreement shall be construed to mean or imply that the Architect has any duty, obligation or responsibility to provide for the safety of the Contractor, Subcontractors, Sub-subcontractors, Material Suppliers, or their agents or employees, any other persons performing portions of the work, or any other persons who may be at the Project Site either legitimately or illegitimately.

E. Add new Clauses 4.2.6.1 and 4.2.6.2 immediately following Subparagraph 4.2.6 to read as follows:

4.2.6.1 The Architect shall not have the authority to reject the Contractor's temporary facilities, construction means, methods, techniques, sequences or procedures or safety precautions and programs.

4.2.6.2 The Architect shall not have the authority to stop the Work for any reason. The exercise of the Architect's authority to reject Work under Subparagraph 4.2.6 shall in no case be interpreted as an order to stop the Work.

F. The second sentence of Subparagraph 4.2.7 shall be modified by adding the words, "within the constraints of the Contractor's schedule of submittals and the Architect's current workload." at the end of the sentence.

1.09 ARTICLE 5 - SUBCONTRACTORS

A. Add new Clause 5.2.1.1 immediately following Subparagraph 5.2.1 to read as follows:

5.2.1.1 The exercise of the Owner's and Architect's authority to make, or not to make, reasonable objection to any proposed person or entity shall not relieve the Contractor of his duty, obligation and responsibility to complete all Work in full compliance with the requirements of the Contract Documents and shall not be construed to mean the approval or rejection of any particular process or material.

B. Subparagraph 5.2.4 shall be modified by adding a sentence immediately prior to the first sentence to read as follows:

The Contractor shall not change a Subcontractor, person or entity previously selected without first notifying the Owner through the Architect of the proposed change in writing and allowing the Owner or Architect reasonable time, after due investigation, to raise a reasonable objection.

C. Add new Subparagraph 5.3.1 immediately following Paragraph 5.3. to read as follows:

5.3.1 The Contractor shall indemnify and hold harmless the Owner, Architect, Architect's Consultants and Agents and employees of any of them from and against claims, damages, losses and expenses, including, but not limited to, attorney's fees, arising out of the Contractor's failure to bind a Subcontractor or Subcontractors to all the terms of the Bidding Documents and the Contract Documents or the Contractor's failure to insure that Subcontractors bind each and every Sub Subcontractor to all the terms of the Bidding Documents or the Contract Documents.

D. Add new Paragraph 5.5 SUPERINTENDENT and Subparagraph 5.5.1 immediately following Subparagraph 5.4.2 to read as follows:

5.5 SUPERINTENDENT

5.5.1 Each Subcontractor and Sub subcontractor shall employ or name a competent Superintendent or

Foreman and necessary assistants who shall be in attendance on a full-time basis at the Project Site during the performance of the Subcontractors or Sub subcontractor's portion of the Work. The Superintendent or Foreman shall represent the Subcontractor or Sub subcontractor, and communications given to the Superintendent or Foreman shall be as binding as if given to the Subcontractor or Sub subcontractor. Important communications shall be confirmed in writing. Other communications shall be similarly confirmed with written request in each case.

1.10 ARTICLE 6 - CONSTRUCTION BY OWNER OR BY SEPARATE CONTRACTORS

A. Add new Subparagraph 6.2.6 immediately following Subparagraph 6.2.5 to read as follows:

6.2.6 Should a Claim against the Owner be filed by a Separate Contractor alleging damage caused by the Contractor, the Owner shall notify the Contractor of such claim. The Contractor shall defend the Owner in all Claim proceedings at the Owner's expense. Should an award or judgement against the Owner be secured by the Separate Contractor, the Contractor shall pay or satisfy said award or judgement and shall reimburse the Owner for all attorney's fees, arbitration costs, court costs, additional architectural fees, and other costs which the Owner has incurred.

1.11 ARTICLE 7 - CHANGES IN THE WORK

A. In Subparagraph 7.3.4 delete the phrase "in case of an increase in the Contract Sum," from the first sentence.

B. The first and second sentences of Subparagraph 7.3.8 shall be modified to read as follows:

The amount of credit or addition for a change which results in a net increase or decrease in the Contract Sum shall be actual net cost as confirmed by the Architect to include a reasonable corresponding adjustment for overhead and profit. When both additions and credits are involved in a change, the overhead and profit allowance shall be calculated on the basis of the net change.

C. Add new Subparagraph 7.3.11 immediately following Subparagraph 7.3.10 to read as follows:

7.3.11 Prior to final payment, all Construction Change Directives issued during the progress of the Work shall be converted into Change Orders and signed by the Contractor. Should the Owner and Contractor fail to agree with the determination made by the Architect concerning adjustments in the Contract Sum and the Contract Time, or otherwise fail to reach agreements upon the adjustments, a controversy shall exist and such controversy shall be submitted to arbitration in compliance with the requirements of Paragraph 15.4 ARBITRATION.

D. Add new Paragraph 7.5 EXPEDITION immediately following Paragraph 7.4. to read as follows:

7.5 EXPEDITION

7.5.1 The Contractor shall not proceed with Changes in the Work authorized under Paragraphs 7.2 or 7.3 until receipt of the appropriate signed documents.

7.5.2 It is recognized that under certain circumstances, changes in the Work, if not processed expeditiously, may delay or endanger the Work. Upon certification by the Architect that unacceptable delay may be caused, or that the Work may be endangered, the Owner may authorize the Contractor to immediately proceed with a Change in the Work. All such authorizations will contain an estimated change in the Contract Sum and an estimated change in the Contract Time. The Contractor shall proceed promptly with the Change in the Work upon receipt of such authorization. Final determination of the changes in the Contract Sum and Contract Time shall be made in a reasonable time and the authorization shall be converted into a Change Order or a Construction Change Directive.

1.12 ARTICLE 8 - TIME

A. Add new Clauses 8.1.4.1 and 8.1.4.2 immediately following Subparagraph 8.1.4 to read as follows:

8.1.4.1 Calendar day shall be defined as a continuous twenty four (24) hour period beginning at 12:00 o'clock midnight.

8.1.4.2 Working day, if used, shall be defined as a Calendar Day, exclusive of Saturdays, Sundays and Federal Holidays when weather or other conditions beyond the Contractor's control do not prevent the completion of at least four (4) hours of work on the principal unit of work underway between the hours of 7:00 o'clock AM and 6:00 o'clock PM local time.

1.13 ARTICLE 9 - PAYMENTS AND COMPLETION

A. Add new Clause 9.3.1.3 immediately following Clause 9.3.1.2 to read as follows:

9.3.1.3 Until Substantial Completion, the Owner shall pay ninety percent (90%) of the amount due the Contractor on account of progress payments unless otherwise provided by statute.

B. Add new Clause 9.3.2.1 immediately following Subparagraph 9.3.2 to read as follows:

9.3.2.1 On each and every Application and Certificate for Payment upon which the Contractor applies for payment for materials stored on the Project Site but not yet incorporated into the Work, or

applies for payment for materials stored off the Project Site, the Contractor shall include a statement as follows: "At time of payment, for value received, the Contractor and applicable Subcontractors, Sub Subcontractors and Material Suppliers, jointly and severely, hereby sell, assign or transfer unto the Owner the property described as stored materials on this Application and Certificate for Payment and do hereby warrant the Title to said property and do hereby certify that said property is free of all liens and encumbrances." Should this statement not be included with the Application and Certificate for Payment, it shall be included by reference with the same force and effect as if it had been written thereon unless the Contractor states his reasons in writing for omitting the statement.

C. Subparagraph 9.4.2 shall be modified by adding the words, "temporary facilities" immediately after the word "techniques" in the fourth sentence.

D. Add new Subparagraph 9.5.5 immediately following Subparagraph 9.5.4 to read as follows:

9.5.5 The Owner shall have the right to act as Agent for the Contractor in disbursing such funds as have been withheld pursuant to Paragraph 9.5 to the party or parties entitled to payment therefrom. The Owner shall render the Contractor an accounting of funds so disbursed.

E. Add new Clauses 9.8.1.1 and 9.8.1.2 immediately following Subparagraph 9.8.1 to read as follows:

9.8.1.1 All inspections required by Federal, State or Local Regulatory Authorities shall be complete prior to the issuance of the Certificate of Substantial Completion unless specifically noted elsewhere. When so required by Regulatory Authority, the Contractor shall also obtain and submit to the Architect a Use or Occupancy Permit prior to the issuance of the Certificate of Substantial Completion. It is the Contractor's responsibility to determine or ascertain what inspections are required, to schedule all such inspections, and to notify the Architect of the time and date of all such inspections a minimum of seven (7) days prior to the inspection date.

9.8.1.2 Should any regulatory inspection disclose any Work which is not in compliance with the Contract Documents, the Contractor shall, prior to the issuance of the Certificate of Substantial Completion, complete or correct such Work promptly. The Contractor shall then schedule another inspection by the appropriate regulatory authority and notify the Architect of the time and date of such reinspection.

F. The first sentence of Subparagraph 9.8.2 shall be modified by adding the phrase "and after all regulatory inspections are complete and, if required, a Use or Occupancy Permit is obtained" immediately following the words "is substantially complete".

G. Subparagraph 9.8.4 shall be modified by deleting the words "and insurance" from the first sentence.

H. Add new Subparagraph 9.8.6 immediately following Subparagraph 9.8.5 to read as follows:

9.8.6 Unless otherwise agreed upon in writing, the issuance of a Certificate of Substantial Completion shall not constitute acceptance of Work not in compliance with the requirements of the Contact Documents.

1.14 ARTICLE 10 - PROTECTION OF PERSONS AND PROPERTY

A. Add new Clause 10.2.4.1 immediately following Subparagraph 10.2.4 to read as follows:

10.2.4.1 When use or storage of explosives or other hazardous materials or equipment are necessary, the Contractor shall give the Owner reasonable advance notice prior to using or storing such hazardous materials.

B. Subparagraph 10.2.7 shall be revised to read as follows:

The Contractor shall be solely responsible for designing and providing all necessary bracing, shoring and tying of all structures, decks and framing and for all other temporary facilities. The Contractor shall adequately brace, shore or otherwise support all elements of the Work to prevent any structural failure which could result in damage to the Work, property or injury or death to persons. The Contractor shall not load or permit any part of the Project or Project Site to be loaded so as to endanger its safety.

C. Add new Clause 10.2.7.1 immediately following Subparagraph 10.2.7 to read as follows:

10.2.7.1 The Contractor shall be solely responsible for the adequacy and safety of all hoisting equipment and scaffolding.

D. Add the following sentence to Subparagraph 10.3.2 at the end of the paragraph:

The Work in the affected area shall be resumed in the absence of asbestos or polychlorinated biphenyl (PCB), or when it has been rendered harmless, or by mediation or arbitration under Paragraph 15.3 MEDIATION and Paragraph 15.4 ARBITRATION, which shall be commenced upon demand by either party without the necessity of a determination by the Architect.

E. Add new Clause 10.3.2.1 immediately following Subparagraph 10.3.2 to read as follows:

10.3.2.1 Asbestos shall be defined as Asbestos Containing Building Material (ACBM) which contains one

percent (1%) or greater of Asbestos as determined by the Polarized Light Microscopy Analysis (PLM), within the meaning of Public Law 99 519 together with the United States Environmental Protection Agency Regulations, Section 763.83 promulgated October 30, 1987, Federal Register, Volume 52, No. 210 defining Asbestos Containing Building Material (ACBM) As modified or supplemented on the Bid Date.

1.15 ARTICLE 11 - INSURANCE AND BONDS

A. Subparagraph 11.3.1 shall be modified by deleting the word "Owner"

B. Add new Clause 11.3.1.1 immediately following Subparagraph 11.3.1 to read as follows:

11.3.7.1 The Owner and Contractor intend that all policies provided in response to the property insurance provisions of the Agreement shall protect all of the parties insured and shall provide primary coverage for all losses and damages caused by the perils covered thereby. Accordingly, all such policies shall contain provisions to the effect that in the event of payment of any loss or damage the insurer will have no rights of recovery against any of the parties named as insured or additional insured.

1.16 ARTICLE 12 - UNCOVERING AND CORRECTION OF WORK

(Not Supplemented)

1.17 ARTICLE 13 - MISCELLANEOUS PROVISIONS

A. Add the following sentence immediately following the first sentence of Subparagraph 13.4.2.

Should the Contractor fail to, or refuse to, make arrangements for such additional testing, the Owner may, after written notice to the Contractor, make arrangements for such additional testing.

B. The first sentence of Subparagraph 13.4.3 shall be modified by adding the words "cost of testing" after the phrase "of repeated procedures".

C. Add new Paragraph 13.6 immediately following Clause 13.5.to read as follows:

13.6 OVERTIME WORK

13.6.1 All Overtime Work as defined by Federal and State Statue required to complete the Work in the Contract Time shall be included in the Contract Sum and the Contractor shall work overtime as required to complete the Work within the Contract Time. The Contract Sum shall not be adjusted for overtime work required to complete the Work in the Contract Time.

13.6.2 The Owner may order, in writing, additional Overtime Work to be performed. The Owner shall bear all costs of such Overtime Work and the Contact Sum shall be adjusted as provided in ARTICLE 7 - CHANGES IN THE WORK.

1.18 ARTICLE 14 - TERMINATION OR SUSPENSION OF THE CONTRACT

A. Add new Clause 14.2.1.5 to Subparagraph 14.2.1 immediately following Clause 14.2.1.4 to read as follows:

14.2.1.5 is adjudged a bankrupt, or if he makes a general assignment for the benefit of his creditors, or if a receiver is appointed on account of his insolvency.

1.19 ARTICLE 15 – CLAIMS AND DISPUTES

A. Add new Clauses 15.1.6.2.1, 15.1.6.2.2 and 15.1.6.2.3 immediately following Clause 15.6.1.2 to read as follows:

15.6.1.2.1 The Contractor shall diligently and carefully research and study weather records for the Project Site for the purpose of determining the anticipated number of adverse weather days which will be encountered during the progress of the Work. An adverse weather day is defined as a day for which the temperature falls below 32°F or precipitation of 0.50 inches or more occurs such that the completion of at least four hours of work on the principal unit of work underway, between the hours of 7:00 o'clock A.M. and 6:00 o'clock P.M., local time, is not possible. This data shall be included with any claim submitted under Clause 15.6.1.2. Weather days for that month have been exceeded. Normal adverse Weather Days shall be as outlined in Table A and described in Section 108.07, Determination and Extension of Contract Time, by Oklahoma Department of Transportation Division.

15.6.1.2.2 Through submission of his Bid, the Contractor attests and warrants that his proposed Contract Time was prepared with full allowance for the anticipated number of adverse weather days.

15.6.1.2.3 Throughout the progress of the Work, the Contractor shall maintain accurate records on a calendar day basis of actual adverse weather days, to include weekends and holidays. These records shall be included with any claim submitted under Subparagraph 15.6.1.2.

END OF SECTION

PART 1 - GENERAL

1.01 RELATED DOCUMENTS

A. Drawings and general provisions of the Contract, including General and Supplementary Conditions and Division 01 Specification Sections, apply to this Section.

1.02 SUMMARY

A. Section Includes:

1. Project information.
2. Work covered by Contract Documents.
3. Work by Owner.
4. Salvage requirements.
5. Owner-furnished products.
6. Access to site.
7. Coordination with occupants.
8. Work restrictions.
9. Specification and drawing conventions.
10. Miscellaneous provisions.

B. Related Requirements:

1. Section 01 50 00 "Temporary Facilities and Controls" for limitations and procedures governing temporary use of Owner's facilities.

1.03 WORK COVERED BY THE CONTRACT DOCUMENTS

A. The Work of Project is defined by the Contract Documents and consists of the following:

1. Portion of the existing Hennessey fire department building demolition.
2. New pre-engineered metal addition including a meeting room, a kitchen, office spaces, and restrooms.

B. The Work is located at:

1. 501 S Main St.
   Hennessey, OK 73742

C. The Work will be constructed for:

1. Kingfisher County Commissioners
   101 South Main Street #9.
   Kingfisher, OK 73750

D. The Partner in Charge is Gang Li

E. The Project Manager is Mary Baily

1.04 TYPE OF CONTRACT

A. Project will be constructed under a Single Prime contract.

1.05 WORK BY OWNER

A. General: Cooperate fully with Owner so work may be carried out smoothly, without interfering with or delaying work under this Contract or work by Owner. Coordinate the Work of this Contract with work performed by Owner.

B. Concurrent Work: Owner will perform the following construction operations at Project site. Those operations will be conducted simultaneously with work under this Contract.

1. Installation of communication and IT service.

1.06 SALVAGE REQUIREMENT

A. Unless otherwise indicated, demolition waste becomes property of Contractor.

B. Unless otherwise indicated, all equipment that must be removed due to interference with work of this contract remains the property of the Owner, and may be salvaged at the Owner's discretion.

C. Owner wishes to salvage, refurbish, and/or reuse the following materials and store and/or reinstall as

itemized below. Drawings also may indicate items to be salvaged and stored on Owner's premises and the location of storage. Coordinate all salvage activities with owner.

1. Item No. 1: Existing south wall end columns and associated steel girt, purlin, and base chanel.
    a. Handling Contractor shall refurbish and reinstall as indicated in the Project documents.

D. Materials and/or items scheduled above for relocation and which are damaged during dismantling or reassembly operations shall be repaired and restored to good operative condition. The Contractor may, at his discretion and upon the approval of the Owner, substitute new materials and/or items of like design and quality in lieu of materials and/or items to be relocated.

1.07 OWNER-FURNISHED PRODUCTS

A. Owner will furnish products indicated. The Work includes receiving, unloading, handling, storing, protecting, and installing Owner-furnished products and making building services connections. Furnish all labor, materials, equipment and incidentals necessary to accommodate the equipment or items furnished by the Owner.

B. Owner-Furnished and Contractor-Installed Products

1. The Contractor shall be responsible for all rough-in required for the item; all final connections required for the item; the placement of the item in its proper location within the Project; and all patch and repair work required.
2. The Contractor shall also be responsible for coordinating a delivery date with the Owner, scheduled with adequate lead time for ordering and delivery such to prevent delays in the Work.
3. The Owner shall be responsible for supplying the information pertinent to the rough-in requirements for the item and for having the item delivered to the Project Site at such time as to prevent delays in the Work in compliance with the Contractor schedule.
4. Owner-Furnished and Contractor-Installed items are denoted <OFCI> in the Contract Documents.

C. Owner-Furnished and Installed Products

1. The Contractor shall be responsible for rough-in required for the item.
2. The Owner shall furnish all information concerning special rough-in requirements, if applicable. The Owner shall be responsible for placement to the item in its final position and any patch and repair required.
3. Owner furnished and installed items are denoted <NIC> in the Contract Documents.

1.08 CONTRACTORS USE OF SITE AND PREMISES

A. General: Contractor shall have full use of Project site for construction operations during construction period. Contractor's use of Project site is limited only by Owner's right to perform work or to retain other contractors on portions of Project.

B. Use of Site: Limit use of Project site to areas within the Contract limits indicated. Do not disturb portions of Project site beyond areas in which the Work is indicated.

C. Provide access to and from site as required by law and by Owner:

1. Emergency Building Exits During Construction: Keep all exits required by code open during construction period; provide temporary exit signs if exit routes are temporarily altered.
2. Do not obstruct roadways, sidewalks, Entrance or other public ways without permit. Keep driveways and entrances serving premises clear and available to Owner, Owner's employees, and emergency vehicles at all times. Do not use these areas for parking or storage of materials.
    a. Schedule deliveries to minimize use of driveways and entrances by construction operations.
    b. Schedule deliveries to minimize space and time requirements for storage of materials and equipment on-site.

D. Existing building spaces may not be used for storage.

E. Utility Outages and Shutdown:

1. Limit disruption of utility services to hours the building is unoccupied.
2. Do not disrupt or shut down life safety systems, including but not limited to fire sprinklers and fire alarm system, without 7 days notice to Owner and authorities having jurisdiction.
3. Prevent accidental disruption of utility services to other facilities.

1.09 OWNER OCCUPANCY

A. Partial Owner Occupancy: Owner will occupy the premises during entire construction period, with the exception of areas under construction. Cooperate with Owner during construction operations to minimize

conflicts and facilitate Owner usage. Perform the Work so as not to interfere with Owner's operations. Maintain existing exits unless otherwise indicated.

1. Maintain access to existing walkways, corridors, and other adjacent occupied or used facilities. Do not close or obstruct walkways, corridors, or other occupied or used facilities without written permission from Owner and authorities having jurisdiction.
2. Provide not less than 72 hours' notice to Owner of activities that will affect Owner's operations.

B. The Owner will occupy the Project after Substantial Completion. Should the Owner require occupancy and occupy the Project prior to issuance of Substantial Completion Certificate, Contractor shall not consider this act an acceptance of any deficient work or deem the project substantially complete.

1.10 WORK RESTRICTIONS

A. Work Restrictions, General: Comply with restrictions on construction operations.

1. Comply with limitations on use of public streets and with other requirements of authorities having jurisdiction.

B. Existing Utility Interruptions: Do not interrupt utilities serving facilities occupied by Owner or others unless permitted under the following conditions and then only after providing temporary utility services according to requirements indicated:

1. Notify Owner not less than two days in advance of proposed utility interruptions.
2. Obtain Owner's written permission before proceeding with utility interruptions.

D. Noise, Vibration, and Odors: Coordinate operations that may result in high levels of noise and vibration, odors, or other disruption to Owner occupancy with Owner.

1. Notify Owner not less than two days in advance of proposed disruptive operations.
2. Obtain Owner's written permission before proceeding with disruptive operations.

E. Nonsmoking Building: The Hennessey Fire Department is a non-smoking building. Smoking is not permitted within the building or on the construction site.

F. Controlled Substances: Use of tobacco products and other controlled substances within the existing building is not permitted.

1.11 OTHER FEATURES

A. At the completion of all work periods the work area shall be cleared, all tools, equipment, materials and other items removed from the work area.

B. Prior to leaving the Project Site at the completion of any work period, take special precautions to insure that the facilities of the Owner have been fully and completely secured.

1.12 SPECIAL PAYMENT PROCEDURES

A. 15th of the month: Last day to submit Payment Request to Architect

B. 20th of the month: Last day to submit Payment Request to Owner

C. 10th day of the following month: Payment will be made to the Contractor

D. Architect cannot assure timely submission of Payment Requests received after the date noted in <A> above.

1.13 CONSTRUCTION OCCUPANCY

A. The Construction Occupancy Date shall be the date of the Notice to Proceed.

1.14 SPECIFICATION SECTIONS APPLICABLE TO ALL CONTRACTS

A. Unless otherwise noted, all provisions of the sections listed below apply to all contracts. Specific items of work listed under individual contract descriptions constitute exceptions.

B. Section 01 20 00 - Price and Payment Procedures.

C. Section 01 25 00 - Substitutions Procedures

D. Section 01 30 00 - Administrative Requirements.

E. Section 01 35 53 - Security Procedures.

F. Section 01 40 00 - Quality Requirements.

G. Section 01 41 00 - References.

H. Section 01 50 00 - Temporary Facilities and Controls.

I. Section 01 51 00 - Temporary Utilities.

J. Section 01 55 00 - Vehicular Access and Parking.

K. Section 01 60 00 - Product Requirements.

L. Section 01 77 00 - Closeout Procedures.

M. Section 01 78 00 -Closeout Submittals.

1.15 SPECIFICATION AND DRAWING CONVENTIONS

A. Specification Content: The Specifications use certain conventions for the style of language and the intended meaning of certain terms, words, and phrases when used in particular situations. These conventions are as follows:

1. Imperative mood and streamlined language are generally used in the Specifications. The words "shall," "shall be," or "shall comply with," depending on the context, are implied where a colon (:) is used within a sentence or phrase.

2. Specification requirements are to be performed by Contractor unless specifically stated otherwise.

3. Anything mentioned in the specifications and not shown on the drawings, or shown on the drawings and not mentioned in the specifications, shall be of like effect as if shown on or mentioned in both. Any clarification and additional information needed, an RFI per 01 31 00 shall prepare and submit to architect.

4. In case of any inconsistency, any apparent difference, or any other apparent discrepancy in drawings, in specifications, or between drawings and specifications, which is most advantageous to the project interpreted by architect according to 00 73 00 Supplementary Condition 1.2.4 will govern. No modifications to the Contract Price will be granted under this situation to follow architect's direction unless contractor specified what was included in the bid form.

B. Division 01 General Requirements: Requirements of Sections in Division 01 apply to the Work of all Sections in the Specifications.

C. Drawing Coordination: Requirements for materials and products identified on the Drawings are described in detail in the Specifications. One or more of the following are used on the Drawings to identify materials and products:

1. Terminology: Materials and products are identified by the typical generic terms used in the individual Specifications Sections.

2. Abbreviations: Materials and products are identified by abbreviations and scheduled on Drawings.

3. Keynoting: Materials and products are identified by reference keynotes referencing Specification Section numbers found in this Project Manual.

1.21 SEQUENCING OF WORK

A. The Work shall proceed continuously from the Notice to Proceed until Final Completion.

B. Substantial Completion of the project is expecting on or before 15 JUNE 2023.

PART 2 - PRODUCTS

2.01 OWNER-FURNISHED AND CONTRACTOR-INSTALLED PRODUCTS:

1. Washer.
2. Extractor.
3. Dryer
4. Ice Machine.
5. Freezer.
6. Fridge.
7. 8 Burner Cooking Range

2.02 OWNER-FURNISHED AND INSTALLED PRODUCTS:

Not Used

2.03 CONTRACTOR-FURNISHED AND OWNER-INSTALLED PRODUCTS:

Not Used

PART 3 - EXECUTION

3.01 GENERAL

A. Comply with all applicable codes, ordinances and requirements specified in Division 22 - Plumbing, Division 23 - HVAC and in Division 26 - Electrical.

B. Installation, where required, shall be complete, in accordance with manufacturer's written instructions and the best practices and standards of the trade involved.

END OF SECTION

PART 1 - GENERAL

1.01 RELATED DOCUMENTS

A. Drawings and general provisions of the Contract, including General and Supplementary Conditions and other Division 01 Specification Sections, apply to this Section.

1.02 SECTION INCLUDES

A. Procedures for preparation and submittal of applications for progress payments.

B. Documentation of changes in Contract Sum and Contract Time.

C. Change procedures.

D. Correlation of Contractor submittals based on changes.

E. Procedures for preparation and submittal of application for final payment.

1.03 SCHEDULE OF VALUES

A. Coordination: Coordinate preparation of the schedule of values with preparation of Contractor's construction schedule.

1. Coordinate line items in the schedule of values with other required administrative forms and schedules, including the following:
    a. Application for Payment forms with continuation sheets.
    b. Submittal schedule.
    c. Items required to be indicated as separate activities in Contractor's construction schedule.
2. Submit the schedule of values to Architect at earliest possible date, but no later than 14 days before the date scheduled for submittal of initial Application for Payment.
3. Subschedules for Phased Work: Where the Work is separated into phases requiring separately phased payments, provide subschedules showing values coordinated with each phase of payment.
4. Subschedules for Separate Elements of Work: Where the Contractor's construction schedule defines separate elements of the Work, provide subschedules showing values coordinated with each element.

B. Format and Content: Use Project Manual table of contents as a guide to establish line items for the schedule of values. Provide at least one line item for each Specification Section.

1. Identification: Include the following Project identification on the schedule of values:
    a. Project name and location.
    b. Name of Architect.
    c. Architect's project number.
    d. Contractor's name and address.
    e. Date of submittal.
2. Form to be used: AIA Form G702 and AIA Form G703 -Application and Certification for Payment Continuation Sheet.
3. Provide a breakdown of the Contract Sum in enough detail to facilitate continued evaluation of Applications for Payment and progress reports. Coordinate with Project Manual table of contents. Provide multiple line items for principal subcontract amounts in excess of five percent of the Contract Sum.
    a. Include separate line items under Contractor and principal subcontracts for Project closeout requirements in an amount totaling five percent of the Contract Sum and subcontract amount.
4. Round amounts to nearest whole dollar; total shall equal the Contract Sum.
5. Provide a separate line item in the schedule of values for each part of the Work where Applications for Payment may include materials or equipment purchased or fabricated and stored, but not yet installed.
    a. Differentiate between items stored on-site and items stored off-site. If required, include

evidence of insurance.

6. Allowances: Provide a separate line item in the schedule of values for each allowance. Show line-item value of unit-cost allowances, as a product of the unit cost, multiplied by measured quantity to achieve the total for the item. Use information indicated in the Contract Documents to determine quantities.

7. Each item in the schedule of values and Applications for Payment shall be complete. Include total cost and proportionate share of general overhead and profit for each item.

    a. Temporary facilities and other major cost items that are not direct cost of actual work-in-place may be shown either as separate line items in the schedule of values or distributed as general overhead expense, at Contractor's option.

8. Schedule Updating: Update and resubmit the schedule of values before the next Applications for Payment when Change Orders or Construction Change Directives result in a change in the Contract Sum. a. Include each Change Order as a new line item.

9. Electronic media printout including equivalent information will be considered in lieu of standard form specified; submit sample to Architect for approval.

10. Forms filled out by hand will not be accepted.

1.04 APPLICATIONS FOR PAYMENT

A. Each Application for Payment following the initial Application for Payment shall be consistent with previous applications and payments as certified by Architect and paid for by Owner.

1. Initial Application for Payment, Application for Payment at time of Substantial Completion, and final Application for Payment involve additional requirements.

B. Payment Application Times: The date for each progress payment is indicated in the Agreement between Owner and Contractor. The period of construction work covered by each Application for Payment is the period indicated in the Agreement.

1. Submit draft copy of Application for Payment seven days prior to due date for review by Architect and Owner.

C. Application for Payment Forms: AIA Form G702 and AIA Form G703 -Application and Certification for Payment Continuation Sheet.

D. Application Preparation: Complete every entry on form. Notarize and execute by a person authorized to sign legal documents on behalf of Contractor. Architect will return incomplete applications without action.

1. Entries shall match data on the schedule of values and Contractor's construction schedule. Use updated schedules if revisions were made.

2. Include amounts for work completed following previous Application for Payment, whether or not payment has been received. Include only amounts for work completed at time of Application for Payment.

3. Include amounts of Change Orders and Construction Change Directives issued before last day of construction period covered by application.

4. Indicate separate amounts for work being carried out under Owner-requested project acceleration.

5. Electronic media printout including equivalent information will be considered in lieu of standard form specified; submit sample to Architect for approval.

6. Forms filled out by hand will not be accepted.

E. Stored Materials: Include in Application for Payment amounts applied for materials or equipment purchased or fabricated and stored, but not yet installed. Differentiate between items stored on-site and items stored off-site.

1. Provide certificate of insurance, evidence of transfer of title to Owner, and consent of surety to payment, for stored materials.

2. Provide supporting documentation that verifies amount requested, such as paid invoices. Match amount requested with amounts indicated on documentation; do not include overhead and profit on stored materials.

3. Provide summary documentation for stored materials indicating the following:

    a. Value of materials previously stored and remaining stored as of date of previous Applications for Payment.

    b. Value of previously stored materials put in place after date of previous Application for Payment and on or before date of current Application for Payment.

c. Value of materials stored since date of previous Application for Payment and remaining stored as of date of current Application for Payment.

F. Transmittal: Submit either four signed and notarized original hard copies or digital copy in PDF format of each Application for Payment to Architect by a method ensuring receipt within 24 hours. Digital copy or one copy shall include waivers of lien and similar attachments.

1. Transmit each copy with a transmittal form listing attachments and recording appropriate information about application.

G. Waivers of Mechanic's Lien: With each Application for Payment, submit waivers of mechanic's liens from subcontractors, sub-subcontractors, and suppliers for construction period covered by the previous application.

1. Submit partial waivers on each item for amount requested in previous application, after deduction for retainage, on each item.
2. When an application shows completion of an item, submit conditional final or full waivers.
3. Owner reserves the right to designate which entities involved in the Work must submit waivers.
4. Submit final Application for Payment with or preceded by conditional final waivers from every entity involved with performance of the Work covered by the application who is lawfully entitled to a lien.
5. Waiver Forms: Submit executed waivers of lien on forms, acceptable to Owner.

H. When Architect requires substantiating information, submit data justifying dollar amounts in question. Provide one copy of data with cover letter for each copy of submittal. Show application number and date, and line item by number and description.

I. Initial Application for Payment: Administrative actions and submittals that must precede or coincide with submittal of first Application for Payment include the following:

1. List of subcontractors.
2. Schedule of values.
3. Contractor's construction schedule (preliminary if not final).
4. Products list (preliminary if not final).
5. Schedule of unit prices.
6. Submittal schedule (preliminary if not final).
7. List of Contractor's staff assignments.
8. List of Contractor's principal consultants.
9. Copies of building permits.
10. Copies of authorizations and licenses from authorities having jurisdiction for performance of the Work.
11. Initial progress report.
12. Report of preconstruction conference.

J. Application for Payment at Substantial Completion: After Architect issues the Certificate of Substantial Completion, submit an Application for Payment showing 100 percent completion for portion of the Work claimed as substantially complete.

1. Include documentation supporting claim that the Work is substantially complete and a statement showing an accounting of changes to the Contract Sum.
2. This application shall reflect Certificate(s) of Substantial Completion issued previously for Owner occupancy of designated portions of the Work.

K. Final Payment Application: After completing Project closeout requirements as specified in Section 01 70 00, submit final Application for Payment with releases and supporting documentation not previously submitted and accepted, including, but not limited, to the following:

1. Evidence of completion of Project closeout requirements.
2. Insurance certificates for products and completed operations where required and proof that taxes, fees, and similar obligations were paid.
3. Updated final statement, accounting for final changes to the Contract Sum.
4. AIA Document G706, "Contractor's Affidavit of Payment of Debts and Claims."
5. AIA Document G706A, "Contractor's Affidavit of Release of Liens."
6. AIA Document G707, "Consent of Surety to Final Payment."

7. Evidence that claims have been settled.

8. Final meter readings for utilities, a measured record of stored fuel, and similar data as of date of Substantial Completion or when Owner took possession of and assumed responsibility for corresponding elements of the Work.

9. Final liquidated damages settlement statement.

1.05 CONTRACT MODIFICATION PROCEDURES

A. Owner-Initiated Proposal Requests: Architect will issue a detailed description of proposed changes in the Work that may require adjustment to the Contract Sum or the Contract Time. If necessary, the description will include supplemental or revised Drawings and Specifications.

1. Work Change Proposal Requests issued by Architect are not instructions either to stop work in progress or to execute the proposed change.

2. Within time specified in Proposal Request or 14 days, when not otherwise specified, after receipt of Proposal Request, submit a quotation estimating cost adjustments to the Contract Sum and the Contract Time necessary to execute the change.

a. Include a list of quantities of products required or eliminated and unit costs, with total amount of purchases and credits to be made. If requested, furnish survey data to substantiate quantities.

b. Indicate applicable taxes, delivery charges, equipment rental, and amounts of trade discounts.

c. Include costs of labor and supervision directly attributable to the change.

d. Include an updated Contractor's construction schedule that indicates the effect of the change, including, but not limited to, changes in activity duration, start and finish times, and activity relationship. Use available total float before requesting an extension of the Contract Time.

B. Contractor-Initiated Proposals: If latent or changed conditions require modifications to the Contract, Contractor may initiate a claim by submitting a request for a change to Architect.

1. Include a statement outlining reasons for the change and the effect of the change on the Work. Provide a complete description of the proposed change. Indicate the effect of the proposed change on the Contract Sum and the Contract Time.

2. Include a list of quantities of products required or eliminated and unit costs, with total amount of purchases and credits to be made. If requested, furnish survey data to substantiate quantities.

3. Indicate applicable delivery charges, equipment rental, and amounts of trade discounts.

4. Include costs of labor and supervision directly attributable to the change.

5. Include an updated Contractor's construction schedule that indicates the effect of the change, including, but not limited to, changes in activity duration, start and finish times, and activity relationship. Use available total float before requesting an extension of the Contract Time.

6. Comply with requirements in Section 01 25 00 "Substitution Procedures" if the proposed change requires substitution of one product or system for product or system specified.

C. Administrative Change Orders

1. For minor changes not involving an adjustment to the Contract Sum or Contract Time, Architect will issue instructions directly to Contractor.

2. For other required changes, Architect will issue a document signed by Owner instructing Contractor to proceed with the change, for subsequent inclusion in a Change Order.

a. The document will describe the required changes and will designate method of determining any change in Contract Sum or Contract Time.

b. Promptly execute the change.

3. For changes for which advance pricing is desired, Architect will issue a document that includes a detailed description of a proposed change with supplementary or revised drawings and specifications, a change in Contract Time for executing the change with a stipulation of any overtime work required and the period of time during which the requested price will be considered valid. Contractor shall prepare and submit a fixed price quotation within 15 days.

4. Contractor may propose a change by submitting a request for change to Architect, describing the proposed change and its full effect on the Work, with a statement describing the reason for the change, and the effect on the Contract Sum and Contract Time with full documentation and a statement describing the effect on Work by separate or other contractors. Document any requested substitutions in accordance with Section 01 60 00.

5. Computation of Change in Contract Amount: As specified in the Agreement and Conditions of the Contract.
    a. For change requested by Architect for work falling under a fixed price contract, the amount will be based on Contractor's price quotation.
    b. For change requested by Contractor, the amount will be based on the Contractor's request for a Change Order as approved by Architect.
    c. For pre-determined unit prices and quantities, the amount will base on the fixed unit prices.
    d. For change ordered by Architect without a quotation from Contractor, the amount will be determined by Architect based on the Contractor's substantiation of costs as specified for Time and Material work.
6. Substantiation of Costs: Provide full information required for evaluation.
    a. On request, provide following data:
        1). Quantities of products, labor, and equipment.
        2). Taxes, insurance, and bonds.
        3). Overhead and profit.
        4). Justification for any change in Contract Time.
        5). Credit for deletions from Contract, similarly documented.
    b. Support each claim for additional costs with additional information:
        1). Origin and date of claim.
        2). Dates and times work was performed, and by whom.
        3). Time records and wage rates paid.
        4). Invoices and receipts for products, equipment, and subcontracts, similarly documented.
    c. For Time and Material work, submit itemized account and supporting data after completion of change, within time limits indicated in the Conditions of the Contract.
7. Execution of Change Orders: Architect will issue Change Orders for signatures of parties as provided in the Conditions of the Contract.
8. After execution of Change Order, promptly revise Schedule of Values and Application for Payment forms to record each authorized Change Order as a separate line item and adjust the Contract Sum.
9. Promptly revise progress schedules to reflect any change in Contract Time, revise sub-schedules to adjust times for other items of work affected by the change, and resubmit.
10. Promptly enter changes in Project Record Documents.

PART 2 - PRODUCTS

NOT USED

PART 3 - EXECUTION

NOT USED

END OF SECTION

PART 1 - GENERAL

1.01 RELATED DOCUMENTS

A. Drawings and general provisions of the Contract, including General and Supplementary Conditions and Division 01 Specification Sections, apply to this Section.

1.02 SUMMARY

A. Section includes administrative and procedural requirements governing allowances.

1. Certain items are specified in the Contract Documents by allowances. Allowances have been established in lieu of additional requirements and to defer selection of actual materials and equipment to a later date when direction will be provided to Contractor. If necessary, additional requirements will be issued by Change Order.

B. Section Includes:

1. Cash allowances.
2. Unit-cost allowances.
3. Quantity allowances.
4. Contingency allowance.
5. Inspection and testing allowances. - Use of allowances for inspection and testing agencies (those included as part of contractor's base bid cost and those that are not) are included in Section 01 40 00 Quality Requirements.
6. Payment and modification procedures relating to allowances.

1.03 RELATED REQUIREMENTS

A. Section 01 20 00 - Price and Payment Procedures: Additional payment and modification procedures.

B. Section 01 22 00 - Unit Prices: for procedures for using unit prices.

C. Section 01 40 00 - Quality Requirements: for procedures governing the use of allowances for testing and inspecting.

1.04 SELECTION AND PURCHASE

A. At the earliest feasible date after Contract award, advice the Architect of the date when the final selection and purchase of each product or system described by an allowance must be completed in order to avoid delay in performance of the Work.

1. When requested by the Architect, obtain proposals for each allowance for use in making final selections; include recommendations that are relevant to performance of the Work.
2. Purchase products and systems as selected by the Architect from the designated supplier.

1.05 SUBMITTALS

A. Submit proposals for purchase of products or systems included in allowances, in the form specified for Change Orders.

B. Submit invoices or delivery slips to indicate actual quantities of materials delivered to the site for use in fulfillment of each allowance.

C. Submit time sheets and other documentation to show labor time and cost for installation of allowance items that include installation as part of the allowance.

D. Coordinate and process submittals for allowance items in same manner as for other portions of the Work.

1.06 COORDINATION

A. Coordinate allowance items with other portions of the Work. Furnish templates as required to coordinate installation.

1.07 CASH UNIT-COST AND QUANTITY ALLOWANCES

A. Costs Included in Cash Allowances: Cost of product to Contractor or subcontractor, less applicable trade discounts, less cost of delivery to site.

B. Costs Not Included in Cash Allowances: Product delivery to site and handling at the site, including unloading, uncrating, and storage; protection of products from elements and from damage; and labor for installation and finishing. All those shall be included as part of the Contract Sum and not part of the allowance.

C. Architect Responsibilities:

1. Consult with Contractor for consideration and selection of products, suppliers, and installers.
2. Select products in consultation with Owner and transmit decision to Contractor.
3. Prepare Change Order.

D. Contractor Responsibilities:

1. Assist Architect in selection of products, suppliers, and installers.
2. Obtain proposals from suppliers and installers and offer recommendations.
3. On notification of which products have been selected, execute purchase agreement with designated supplier and installer.
4. Arrange for and process shop drawings, product data, and samples. Arrange for delivery.
5. Promptly inspect products upon delivery for completeness, damage, and defects. Submit claims for transportation damage.

E. Differences in costs will be adjusted by Change Order.

1.08 CONTINGENCY ALLOWANCE

A. Use the contingency allowance only as directed for the Owner's purposes. Funds will be drawn from the Contingency Allowance only by Change Order.

1. The Contractor's related costs for products or equipment ordered by the Owner under the contingency allowance, including delivery, installation, taxes, insurance, equipment rental, and similar costs are not part of the Contract Sum. However, no costs for Performance Bonds and Contractor’s Insurance can be added to Change Orders using Contingency Allowance funds until the original contract sum for which the bonds and insurances have been written for has been exceeded.
2. Change Orders authorizing use of funds from the contingency allowance will include the Contractor's related costs and reasonable overhead and profit margins (see Supplementary General Conditions).

B. At closeout of Contract, funds remaining in Contingency Allowance will be credited to Owner by Change Order.

1.09 INSPECTION AND TESTING ALLOWANCES

A. Testing and inspecting allowances include the cost of engaging testing agencies, actual tests and inspections, and reporting results.

B. Inspection and testing allowances include the cost of engaging the inspection or testing agencies and costs for reporting the results of **unanticipated** below grade soil conditions. General Contractor shall include in his regular job costs, the inspection and testing required for footing and foundation soil compaction, concrete testing as specified in those sections of these specifications.

C. The allowance does not include incidental labor required to assist the testing agency or costs for retesting if previous tests and inspections result in failure. The cost for incidental labor to assist the testing agency shall be included in the Contract Sum.

D. Costs of services not required by the Contract Documents are not included in the allowance.

E. At Project closeout, credit unused amounts remaining in the inspection and testing allowance to Owner by Change Order.

1.10 UNUSED MATERIALS

A. Return unused materials to the manufacturer or supplier for credit to the Owner, after installation has been completed and accepted.

B. Where it is not economically feasible to return unused material for credit and when requested by the Architect, prepare unused material for the Owner's storage, and deliver to the Owner's storage space as directed. Otherwise, disposal of excess material is the Contractor's responsibility.

1.11 ADJUSTMENT OF ALLOWANCES

A. Allowance Adjustment: To adjust allowance amounts, prepare a Change Order proposal based on the difference between purchase amount and the allowance, multiplied by final measurement of work-in-place where applicable. If applicable, include reasonable allowances for cutting losses, tolerances, mixing wastes, normal product imperfections, and similar margins.

1. Include installation costs in purchase amount only where indicated as part of the allowance.
2. If requested, prepare explanation and documentation to substantiate distribution of overhead costs and other margins claimed.

3. Submit substantiation of a change in scope of work, if any, claimed in Change Orders related to unit-cost allowances.

4. Owner reserves the right to establish the quantity of work-in-place by independent quantity survey, measure, or count.

B. Submit claims for increased costs because of a change in scope or nature of the allowance described in the Contract Documents, whether for the purchase order amount or Contractor's handling, labor, installation, overhead, and profit.

1. Do not include Contractor's or subcontractor's indirect expense in the Change Order cost amount unless it is clearly shown that the nature or extent of work has changed from what could have been foreseen from information in the Contract Documents.

2. No change to Contractor's indirect expense is permitted for selection of higher- or lower-priced materials or systems of the same scope and nature as originally indicated.

PART 2 - PRODUCTS

NOT USED

PART 3 - EXECUTION

3.01 INSPECTION

A. Inspect products covered by an allowance promptly upon delivery for damage or defects.

3.02 PREPARATION

A. Coordinate materials and their installation for each allowance with related materials and installations to ensure that each allowance item is completely integrated and interfaced with related construction activities.

3.03 SCHEDULE OF ALLOWANCES

A. Allowance No. 1: Testing and Inspecting - One (1) percent of cost of construction. Including special testing and report as specified in Section 01 45 33 “Code-Required Special Inspections and Procedures”

1. This fund shall be listed separately on the Schedule of Values. Should an additive or deductive Change Order occur on this Project, this fund amount will be adjusted upward or downward an amount exactly equal to the amount of said Change Order. At the conclusion of the Project, the Owner and Contractor agree to execute a deductive Change Order in the full amount remaining in the OWNER CONTINGENCY Fund. For the purposes of calculating the percentage of project completion on the Contractor's monthly Application and Certification for Payment, the amount in the CONTINGENCY ALLOWANCE fund shall be excluded.

END OF SECTION

PART 1 - GENERAL

1.01 RELATED DOCUMENTS

A. Drawings and general provisions of the Contract, including General and Supplementary Conditions and Division 01 Specification Sections, apply to this Section.

1.02 SECTION INCLUDES

A. List of unit prices, for use in preparing Bids.

B. Measurement and payment criteria applicable to Work performed under a unit price payment method.

C. Defect assessment and non-payment for rejected work.

1.03 COSTS INCLUDED

A. Unit Prices included on the Bid Form shall include full compensation for all required labor, products, tools, equipment, plant, transportation, services and incidentals; erection, application or installation of an item of the Work; overhead and profit.

1.04 UNIT QUANTITIES SPECIFIED

A. Quantities indicated in the Bid Form are for bidding and contract purposes only. Quantities and measurements of actual Work will determine the payment amount.

1.05 MEASUREMENT OF QUANTITIES

A. Measurement methods delineated in the individual specification sections complement the criteria of this section. In the event of conflict, the requirements of the individual specification section govern.

B. Take all measurements and compute quantities. Measurements and quantities will be verified by Contractor and Architect.

C. Assist by providing necessary equipment, workers, and survey personnel as required.

D. Measurement Devices:

1. Weigh Scales: Inspected, tested and certified by the applicable state Weights and Measures department within the past year

2. Platform Scales: Of sufficient size and capacity to accommodate the conveying vehicle.

3. Metering Devices: Inspected, tested and certified by the applicable state department within the past year.

E. Measurement by Weight: Concrete reinforcing steel, rolled or formed steel or other metal shapes will be measured by handbook weights. Welded assemblies will be measured by handbook or scale weight.

F. Measurement by Volume: Measured by cubic dimension using mean length, width and height or thickness.

G. Measurement by Area: Measured by square dimension using mean length and width or radius.

H. Linear Measurement: Measured by linear dimension, at the item centerline or mean chord.

I. Stipulated Price Measurement: Items measured by weight, volume, area, or linear means or combination, as appropriate, as a completed item or unit of the Work.

J. Perform surveys required to determine quantities, including control surveys to establish measurement reference lines. Notify Architect prior to starting work.

K. Contractor's Engineer Responsibilities: Sign surveyor's field notes or keep duplicate field notes, calculate and certify quantities for payment purposes.

1.06 PAYMENT

A. Payment for Work governed by unit prices will be made on the basis of the actual measurements and quantities of Work that is incorporated in or made necessary by the Work and accepted by the Architect, multiplied by the unit price.

B. Payment will not be made for any of the following:

1. Products wasted or disposed of in a manner that is not acceptable.

2. Products determined as unacceptable before or after placement.

3. Products not completely unloaded from the transporting vehicle.

4. Products placed beyond the lines and levels of the required Work.

5. Products remaining on hand after completion of the Work.

6. Loading, hauling, and disposing of rejected Products.

1.07 DEFECT ASSESSMENT

A. Replace Work, or portions of the Work, not conforming to specified requirements.

B. If, in the opinion of Architect, it is not practical to remove and replace the Work, Architect will direct one of the following remedies:

1. The defective Work may remain, but the unit price will be adjusted to a new unit price at the discretion of Architect.

2. The defective Work will be partially repaired to the instructions of the Architect, and the unit price will be adjusted to a new unit price at the discretion of Architect.

C. The individual specification sections may modify these options or may identify a specific formula or percentage price reduction.

D. The authority of Architect to assess the defect and identify payment adjustment is final.

1.08 SCHEDULE OF UNIT PRICES

A. Item: No.1; Unit price per square foot to install four (4) inch concrete sidewalk on four (4) inch sand base per Section 32 13 14 “Concrete Walks and Pads”.

PART 2 - PRODUCTS

NOT USED

PART 3 - EXECUTION

NOT USED

END OF SECTION

PART 1 - GENERAL

1.01 RELATED DOCUMENTS

A. Drawings and general provisions of the Contract, including General and Supplementary Conditions and other Division 01 Specification Sections, apply to this Section.

1.02 SUMMARY

A. Section includes administrative and procedural requirements for alternates.

1.03 DEFINITIONS

A. Alternate: An amount proposed by bidders and stated on the Bid Form for certain work defined in the bidding requirements that may be added to or deducted from the base bid amount if Owner decides to accept a corresponding change either in the amount of construction to be completed or in the products, materials, equipment, systems, or installation methods described in the Contract Documents.

1. Alternates described in this Section are part of the Work only if enumerated in the Agreement.
2. The cost or credit for each alternate is the net addition to or deduction from the Contract Sum to incorporate alternate into the Work. No other adjustments are made to the Contract Sum.

1.04 PROCEDURES

A. Coordination: Revise or adjust affected adjacent work as necessary to completely integrate work of the alternate into Project.

1. Include as part of each alternate, miscellaneous devices, accessory objects, and similar items incidental to or required for a complete installation whether or not indicated as part of alternate.

B. Notification: Immediately following award of the Contract, each party involved shall be notified in writing of the status of each alternate, in particular whether alternates have been accepted, rejected, or deferred for later consideration. Notification shall include a complete description of negotiated revisions to alternates.

C. Execute accepted alternates under the same conditions as other work of the Contract.

D. Schedule: A schedule of alternates is included at the end of this Section. Specification Sections referenced in schedule contain requirements for materials necessary to achieve the work described under each alternate.

PART 2 - PRODUCTS

NOT USED

PART 3 - EXECUTION

3.01 SCHEDULE OF ALTERNATES

A. Alternate No. 1: New Metal Wall Panel

1. Base Bid: Not include and keep existing.
2. Alternate: Demo existing metal wall panels, replace with new metal wall panels on east side. demo metal roof and gutter/downspouts east side, replace with new metal roof panels, gutters, and downspouts east side as indicated on drawing sheet A-101.

B. Alternate No. 2: Brick Edge

1. Base Bid: Not include.
2. Alternate: Add brick ledge to existing east side as indicated on drawing sheet A-101.

C. Alternate No. 3: New Brick Veneer

1. Base Bid: Not include.
2. Alternate: Add brick to remaining building. Portions of north and south elevations and all of east side as indicated on drawing sheet A-101.

END OF SECTION

PART 1 - GENERAL

1.01 RELATED DOCUMENTS

A. Drawings and general provisions of the Contract, including General and Supplementary Conditions and Division 01 Specification Sections, apply to this Section.

1.02 SUMMARY

A. Section includes administrative and procedural requirements for substitutions.

B. Related Section:

1. Section 01 21 00 - Allowances for products selected under an allowance.
2. Section 01 23 00 - Alternates for products selected under an alternate.
3. Section 01 60 00 - Product Requirements for requirements for submitting comparable product submittals for products by listed manufacturers.

1.03 DEFINITIONS

A. Substitutions: Changes in products, materials, equipment, and methods of construction from those required by the Contract Documents and proposed by Contractor.

1. Substitutions for Cause: Changes proposed by Contractor that are required due to changed Project conditions, such as unavailability of product, regulatory changes, or unavailability of required warranty terms.
2. Substitutions for Convenience: Changes proposed by Contractor or Owner that are not required in order to meet other Project requirements but may offer advantage to Contractor or Owner.

1.04 SUBMITTALS

A. Substitution Requests: Submit three copies of each request for consideration. Identify product or fabrication or installation method to be replaced. Include Specification Section number and title and Drawing numbers and titles.

1. During the Bidding Phase Substitution Request Form: CSI Form 1.5C
2. After the Bidding Phase Substitution Request Form: CSI Form 13.1A.
3. Documentation: Show compliance with requirements for substitutions and the following, as applicable:
    a. Statement indicating why specified product or fabrication or installation cannot be provided, if applicable.
    b. Coordination information, including a list of changes or modifications needed to other parts of the Work and to construction performed by Owner and separate subcontractors that will be necessary to accommodate proposed substitution.
    c. Detailed comparison of significant qualities of proposed substitution with those of the Work specified. Include annotated copy of applicable specification section. Significant qualities may include attributes such as performance, weight, size, durability, visual effect, sustainable design characteristics, warranties, and specific features and requirements indicated. Indicate deviations, if any, from the Work specified.
    d. Product Data, including drawings and descriptions of products and fabrication and installation procedures.
    e. Samples, where applicable or requested.
    f. Certificates and qualification data, where applicable or requested.
    g. List of similar installations for completed projects with project names and addresses and names and addresses of architects and owners.
    h. Material test reports from a qualified testing agency indicating and interpreting test results for compliance with requirements indicated.
    i. Research reports evidencing compliance with building code in effect for Project, from ICC-ES.
    j. Detailed comparison of Contractor's construction schedule using proposed substitution with products specified for the Work, including effect on the overall Contract Time. If specified product or method of construction cannot be provided within the Contract

Time, include letter from manufacturer, on manufacturer's letterhead, stating date of receipt of purchase order, lack of availability, or delays in delivery.

k. Cost information, including a proposal of change, if any, in the Contract Sum.

l. Contractor's certification that proposed substitution complies with requirements in the Contract Documents except as indicated in substitution request, is compatible with related materials, and is appropriate for applications indicated.

m. Contractor's waiver of rights to additional payment or time that may subsequently become necessary because of failure of proposed substitution to produce indicated results.

4. Architect's Action: If necessary, Architect will request additional information or documentation for evaluation within seven days of receipt of a request for substitution. Architect will notify Contractor of acceptance or rejection of proposed substitution within 15 days of receipt of request, or seven days of receipt of additional information or documentation, whichever is later.

a. Forms of Acceptance: Change Order, Construction Change Directive, or Architect's Supplemental Instructions for minor changes in the Work.

b. Use product specified if Architect does not issue a decision on use of a proposed substitution within time allocated.

1.05 QUALITY ASSURANCE

A. Compatibility of Substitutions: Investigate and document compatibility of proposed substitution with related products and materials. Engage qualified testing agency to perform compatibility tests recommended by manufacturers.

1.06 PROCEDURES

A. Coordination: Revise or adjust affected work as necessary to integrate work of the approved substitutions.

PART 2 - PRODUCTS

2.01 SUBSTITUTIONS

A. Substitutions for Cause: Submit requests for substitution immediately upon discovery of need for change, but not later than 15 days prior to time required for preparation and review of related submittals.

1. Conditions: Architect will consider Contractor's request for substitution when the following conditions are satisfied:

a. Requested substitution is consistent with the Contract Documents and will produce indicated results.

b. Requested substitution will not adversely affect Contractor's construction schedule.

c. Requested substitution has received necessary approvals of authorities having jurisdiction.

d. Requested substitution is compatible with other portions of the Work.

e. Requested substitution has been coordinated with other portions of the Work.

f. Requested substitution provides specified warranty.

g. If requested substitution involves more than one contractor, requested substitution has been coordinated with other portions of the Work, is uniform and consistent, is compatible with other products, and is acceptable to all contractors involved.

B. Substitutions for Convenience: Architect will consider requests for substitution if received within 60 days after the Notice to Proceed.

1. Conditions: Architect will consider Contractor's request for substitution when the following conditions are satisfied:

a. Requested substitution offers Owner a substantial advantage in cost, time, energy conservation, or other considerations, after deducting additional responsibilities Owner must assume. Owner's additional responsibilities may include compensation to Architect for redesign and evaluation services, increased cost of other construction by Owner, and similar considerations.

b. Requested substitution does not require extensive revisions to the Contract Documents.

c. Requested substitution is consistent with the Contract Documents and will produce indicated results.

d. Requested substitution will not adversely affect contractor's construction schedule.

e. Requested substitution has received necessary approvals of authorities having jurisdiction.

f. Requested substitution is compatible with other portions of the Work.

g. Requested substitution has been coordinated with other portions of the Work.

h. Requested substitution provides specified warranty.

i. If requested substitution involves more than one subcontractor, requested substitution has been coordinated with other portions of the Work, is uniform and consistent, is compatible with other products, and is acceptable to all subcontractors involved.

PART 3 - EXECUTION

NOT USED

END OF SECTION

DIVISION 01 - GENERAL REQUIREMENTS

ADMINISTRATIVE REQUIREMENTS SECTION 01 30 00

PART 1 - GENERAL

1.01 RELATED DOCUMENTS

A. Drawings and general provisions of the Contract, including General and Supplementary Conditions and Division 01 Specification Sections, apply to this Section.

1.02 SECTION INCLUDES

A. Preconstruction meeting.

B. Site mobilization meeting.

1.03 PROJECT COORDINATION

A. Project Coordinator: Contractor.

B. Cooperate with the Project Coordinator in allocation of mobilization areas of site; for field offices and sheds, for vehicle access, traffic, and parking facilities.

C. During construction, coordinate use of site and facilities through the Project Coordinator.

D. Comply with Project Coordinator's procedures for intra-project communications; submittals, reports and records, schedules, coordination drawings, and recommendations; and resolution of ambiguities and conflicts.

E. Comply with instructions of the Project Coordinator for use of temporary utilities and construction facilities.

F. Coordinate field engineering and layout work under instructions of the Project Coordinator.

G. Make the following types of submittals to Architect through the Project Coordinator:

1. Requests for interpretation.
2. Requests for substitution.
3. Shop drawings, product data, and samples.
4. Test and inspection reports.
5. Design data.
6. Manufacturer's instructions and field reports.
7. Applications for payment and change order requests.
8. Progress schedules.
9. Coordination drawings.
10. Closeout submittals.

PART 2 - PRODUCTS

NOT USED

PART 3 - EXECUTION

3.01 PRECONSTRUCTION MEETING

A. Contractor will schedule a meeting after Notice of Award.

B. Attendance Required:

1. Owner.
2. Architect.
3. Contractor.

C. Agenda:

1. Execution of Owner-Contractor Agreement.
2. Submission of executed bonds and insurance certificates.
3. Distribution of Contract Documents.
4. Submission of list of Subcontractors, list of Products, schedule of values, and progress schedule.
5. Procedures and processing of field decisions, submittals, and substitutions, applications for

payments, proposal request, Change Orders, and Contract closeout procedures.

6. Scheduling.

D. Record minutes and distribute copies within two days after meeting to participants, with two copies to Architect, Owner, participants, and those affected by decisions made.

3.02 SITE MOBILIZATION MEETING

A. Contractor will schedule a meeting at the Project Site prior to Contractor Occupancy.

B. Attendance Required:

1. Contractor.
2. Owner.
3. Architect.
4. Contractor's Superintendent.
5. Major Subcontractors.

C. Agenda:

1. Use of premises by Owner.
2. Owner's requirements and occupancy prior to completion.
3. Construction facilities and controls provided by Owner.
4. Temporary utilities provided by Owner.
5. Survey and building layout.
6. Security and housekeeping procedures.
7. Schedules.
8. Application for payment procedures.
9. Procedures for testing.
10. Procedures for maintaining record documents.
11. Requirements for start-up of equipment.
12. Inspection and acceptance of equipment put into service during construction period.

D. Record minutes and distribute copies within two days after meeting to participants, with two copies to Architect, Owner, participants, and those affected by decisions made.

END OF SECTION

PART 1 - GENERAL

1.01 RELATED DOCUMENTS

A. Drawings and general provisions of the Contract, including General and Supplementary Conditions and Division 01 Specification Sections, apply to this Section.

1.02 SUMMARY

A. Section includes administrative provisions for coordinating construction operations on Project including, but not limited to, the following:

1. General coordination procedures.
2. Coordination drawings.
3. Requests for Information (RFIs).
4. Project meetings.

B. Related Sections:

1. Section 01 73 00 - Execution for procedures for coordinating general installation and field-engineering services, including establishment of benchmarks and control points.
2. Section 01 77 00 - Closeout Procedures for coordinating closeout of the Contract.

1.03 DEFINITIONS

A. RFI: Request from Owner, or Architect seeking information from each other during construction.

1.04 INFORMATIONAL SUBMITTALS

A. Subcontract List: Prepare a written summary identifying individuals or firms proposed for each portion of the Work, including those who are to furnish products or equipment fabricated to a special design. Include the following information in tabular form:

1. Name, address, and telephone number of entity performing subcontract or supplying products.
2. Number and title of related Specification Section(s) covered by subcontract.
3. Drawing number and detail references, as appropriate, covered by subcontract.

B. Key Personnel Names: Within 15 days of starting construction operations, submit a list of key personnel assignments, including superintendent and other personnel in attendance at Project site. Identify individuals and their duties and responsibilities; list addresses and telephone numbers, including home, office, and cellular telephone numbers and e-mail addresses. Provide names, addresses, and telephone numbers of individuals assigned as alternates in the absence of individuals assigned to Project.

1. Post copies of list in project meeting room, in temporary field office, on Project Web site, and by each temporary telephone. Keep list current at all times.

1.05 COORDINATION

A. Coordination: Coordinate construction operations included in different Sections of the Specifications to ensure efficient and orderly installation of each part of the Work. Coordinate construction operations, included in different Sections that depend on each other for proper installation, connection, and operation.

1. Schedule construction operations in sequence required to obtain the best results where installation of one part of the Work depends on installation of other components, before or after its own installation.
2. Coordinate installation of different components to ensure maximum performance and accessibility for required maintenance, service, and repair.
3. Make adequate provisions to accommodate items scheduled for later installation.

B. Prepare memoranda for distribution to each party involved, outlining special procedures required for coordination. Include such items as required notices, reports, and list of attendees at meetings.

1. Prepare similar memoranda for Owner and separate subcontractors if coordination of their Work is required.

C. Administrative Procedures: Coordinate scheduling and timing of required administrative procedures with other construction activities to avoid conflicts and to ensure orderly progress of the Work. Such administrative activities include, but are not limited to, the following:

1. Preparation of Contractor's construction schedule.

2. Preparation of the schedule of values.
3. Installation and removal of temporary facilities and controls.
4. Delivery and processing of submittals.
5. Progress meetings.
6. Preinstallation conferences.
7. Project closeout activities.
8. Startup and adjustment of systems.
9. Project closeout activities.

1.06 COORDINATION DRAWINGS

A. Coordination Drawings, General: Prepare coordination drawings in accordance with requirements in individual Sections, where installation is not completely shown on Shop Drawings, where limited space availability necessitates coordination, or if coordination is required to facilitate integration of products and materials fabricated or installed by more than one entity.

1. Content: Project-specific information, drawn accurately to a scale large enough to indicate and resolve conflicts. Do not base coordination drawings on standard printed data. Include the following information, as applicable:
   a. Use applicable Drawings as a basis for preparation of coordination drawings. Prepare sections, elevations, and details as needed to describe relationship of various systems and components.
   b. Indicate functional and spatial relationships of components of architectural, structural, civil, mechanical, and electrical systems.
   c. Indicate space requirements for routine maintenance and for anticipated replacement of components during the life of the installation.
   d. Show location and size of access doors required for access to concealed dampers, valves, and other controls.
   e. Indicate required installation sequences.
   f. Indicate dimensions shown on the Drawings. Specifically note dimensions that appear to be in conflict with submitted equipment and minimum clearance requirements. Provide alternate sketches to Architect indicating proposed resolution of such conflicts. Minor dimension changes and difficult installations will not be considered changes to the Contract.

B. Coordination Drawing Organization: Organize coordination drawings as follows:

1. Floor Plans and Reflected Ceiling Plans: Show architectural and structural elements, and mechanical, plumbing, fire protection, fire alarm, and electrical Work. Show locations of visible ceiling-mounted devices relative to acoustical ceiling grid.
2. Plenum Space: Indicate subframing for support of ceiling and wall systems, mechanical and electrical equipment, and related Work. Locate components within ceiling plenum to accommodate layout of light fixtures indicated on Drawings.
3. Mechanical Rooms: Provide coordination drawings for mechanical rooms showing plans and elevations of mechanical, plumbing, fire protection, fire alarm, and electrical equipment.
4. Structural Penetrations: Indicate penetrations and openings required for all disciplines.
5. Slab Edge and Embedded Items: Indicate slab edge locations and sizes and locations of embedded items for metal fabrications, sleeves, anchor bolts, bearing plates, angles, door floor closers, slab depressions for floor finishes, curbs and housekeeping pads, and similar items.
6. Mechanical and Plumbing Work: Show the following:
   a. Sizes and bottom elevations of ductwork, piping, and conduit runs, including insulation, bracing, flanges, and support systems.
   b. Dimensions of major components, such as dampers, valves, diffusers, access doors, cleanouts and electrical distribution equipment.
   c. Fire-rated enclosures around ductwork.
7. Electrical Work: Show the following:
   a. Runs of vertical and horizontal conduit 1-1/4 inches (31.5 mm) in diameter and larger.
   b. Light fixture, exit light, emergency battery pack, smoke detector, and other fire alarm locations.

c. Panel board, switch board, switchgear, transformer, busway, generator, and motor control center locations.

d. Location of pull boxes and junction boxes, dimensioned from column center lines.

8. Fire-Protection System: Show the following:

a. Locations of standpipes, mains piping, branch lines, pipe drops, and sprinkler heads.

9. Review: Architect will review coordination drawings to confirm that the Work is being coordinated, but not for the details of the coordination, which are the Contractor's responsibility.

C. Coordination Digital Data Files: Prepare coordination digital data files according to the following requirements:

1. File Preparation Format: Same digital data software program, version, and operating system as original Drawings.

2. File Submittal Format: Submit or post coordination drawing files using Portable Data File (PDF) format.

3. Architect will furnish Contractor one set of digital data files of Drawings for use in preparing coordination digital data files.

a. Architect makes no representations as to the accuracy or completeness of digital data files as they relate to Drawings.

b. Contractor shall execute a data licensing agreement in the form of AIA Document C106.

1.07 REQUESTS FOR INFORMATION (RFIs)

A. General: Immediately on discovery of the need for additional information or interpretation of the Contract Documents, contractor shall prepare and submit an RFI in the form specified.

1. Architect will return RFIs submitted to Architect by other entities controlled by Contractor with no response.

2. Coordinate and submit RFIs in a prompt manner so as to avoid delays in Contractor's work or work of subcontractors.

B. Content of the RFI: Include a detailed, legible description of item needing information or interpretation and the following:

1. Project name.

2. Project number.

3. Date.

4. Name of Contractor.

5. Name of Architect.

6. RFI number, numbered sequentially.

7. RFI subject.

8. Specification Section number and title and related paragraphs, as appropriate.

9. Drawing number and detail references, as appropriate.

10. Field dimensions and conditions, as appropriate.

11. Contractor's suggested resolution. If Contractor's solution(s) impacts the Contract Time or the Contract Sum, Contractor shall state impact in the RFI.

12. Contractor's signature.

13. Attachments: Include sketches, descriptions, measurements, photos, Product Data, Shop Drawings, coordination drawings, and other information necessary to fully describe items needing interpretation.

a. Include dimensions, thicknesses, structural grid references, and details of affected materials, assemblies, and attachments on attached sketches.

C. RFI Forms: Software-generated form with substantially the same content as indicated above, acceptable to Architect.

1. Attachments shall be electronic files in Adobe Acrobat PDF format.

D. Architect's Action: Architect will review each RFI, determine action required, and respond. Allow seven working days for Architect's response for each RFI. RFIs received by Architect after 1:00 p.m. will be considered as received the following working day.

1. The following RFIs will be returned without action:

a. Requests for approval of submittals.

b. Requests for approval of substitutions.

c. Requests for approval of Contractor's means and methods.

d. Requests for coordination information already indicated in the Contract Documents.

e. Requests for adjustments in the Contract Time or the Contract Sum.

f. Requests for interpretation of Architect's actions on submittals.

g. Incomplete RFIs or inaccurately prepared RFIs.

2. Architect's action may include a request for additional information, in which case Architect's time for response will date from time of receipt of additional information.

3. Architect's action on RFIs that may result in a change to the Contract Time or the Contract Sum may be eligible for Contractor to submit Change Proposal according to Section 01 20 00 – Price and Payment Procedures, 1.05 Contract Modification Procedures.

a. If Contractor believes the RFI response warrants change in the Contract Time or the Contract Sum, notify Architect in writing within 10 days of receipt of the RFI response.

E. On receipt of Architect's action, update the RFI log and immediately distribute the RFI response to affected parties. Review response and notify Architect within seven days if Contractor disagrees with response.

1. Identification of related Minor Change in the Work, Construction Change Directive, and Proposal Request, as appropriate.

F. RFI Log: Prepare, maintain, and submit a tabular log of RFIs organized by the RFI number. Submit log weekly. Use CSI Log Form 13.2B. Include the following:

1. Project name.

2. Name and address of Contractor.

3. Name and address of Architect.

4. RFI number including RFIs that were dropped and not submitted.

5. RFI description.

6. Date the RFI was submitted.

7. Date Architect's response was received.

8. Identification of related Minor Change in the Work, Construction Change Directive, and Proposal Request, as appropriate.

9. Identification of related Field Order, Work Change Directive, and Proposal Request, as appropriate.

1.08 PROJECT MEETINGS

A. General: Schedule and conduct meetings and conferences at Project site, unless otherwise indicated.

1. Attendees: Inform participants and others involved, and individuals whose presence is required, of date and time of each meeting. Notify Owner and Architect of scheduled meeting dates and times.

2. Agenda: Prepare the meeting agenda. Distribute the agenda to all invited attendees.

3. Minutes: Entity responsible for conducting meeting will record significant discussions and agreements achieved. Distribute the meeting minutes to everyone concerned, including Owner and Architect, within three days of the meeting.

B. Preconstruction Conference: Conduct a preconstruction conference before starting construction, at a time convenient to Owner and Architect, but no later than 15 days after execution of the Agreement.

1. Conduct the conference to review responsibilities and personnel assignments.

2. Attendees: Authorized representatives of Owner, Architect, and their consultants; Contractor and its superintendent; major subcontractors; suppliers; and other concerned parties shall attend the conference. Participants at the conference shall be familiar with Project and authorized to conclude matters relating to the Work.

3. Agenda: Discuss items of significance that could affect progress, including the following:

a. Tentative construction schedule.

b. Phasing.

c. Critical work sequencing and long-lead items.

d. Designation of key personnel and their duties.
e. Procedures for processing field decisions and Change Orders.
f. Procedures for RFIs.
g. Procedures for testing and inspecting.
h. Procedures for processing Applications for Payment.
i. Distribution of the Contract Documents.
j. Submittal procedures.
k. Sustainable design requirements.
l. Preparation of record documents.
m. Use of the premises.
n. Work restrictions.
o. Working hours.
p. Owner's occupancy requirements.
q. Responsibility for temporary facilities and controls.
r. Procedures for moisture and mold control.
s. Procedures for disruptions and shutdowns.
t. Construction waste management and recycling.
u. Parking availability.
v. Office, work, and storage areas. w. Equipment deliveries and priorities.
x. First aid.
y. Security.
z. Progress cleaning.

3. Minutes: Entity responsible for conducting meeting will record and distribute meeting minutes.

C. Preinstallation Conferences: Conduct a preinstallation conference at Project site before each construction activity that requires coordination with other construction.

1. Attendees: Installer and representatives of manufacturers and fabricators involved in or affected by the installation and its coordination or integration with other materials and installations that have preceded or will follow, shall attend the meeting. Advise Architect of scheduled meeting dates.
2. Agenda: Review progress of other construction activities and preparations for the particular activity under consideration, including requirements for the following:
a. Contract Documents.
b. Options.
c. Related RFIs.
d. Related Change Orders. e. Purchases.
f. Deliveries. g. Submittals.
h. Review of mockups.
i. Possible conflicts.
j. Compatibility problems.
k. Time schedules.
l. Weather limitations.
m. Manufacturer's written recommendations.
n. Warranty requirements.
o. Compatibility of materials.
p. Acceptability of substrates.
q. Temporary facilities and controls.
r. Space and access limitations.
s. Regulations of authorities having jurisdiction.
t. Testing and inspecting requirements.

u. Installation procedures.

v. Coordination with other work.

w. Required performance results.

x. Protection of adjacent work.

y. Protection of construction and personnel.

3. Record significant conference discussions, agreements, and disagreements, including required corrective measures and actions.

4. Reporting: Distribute minutes of the meeting to each party present and to other parties requiring information.

5. Do not proceed with installation if the conference cannot be successfully concluded. Initiate whatever actions are necessary to resolve impediments to performance of the Work and reconvene the conference at earliest feasible date.

D. Progress Meetings: Conduct progress meetings at monthly intervals.

1. Coordinate dates of meetings with preparation of payment requests.

2. Attendees: In addition to representatives of Owner and Architect, Contractor, each subcontractor, supplier, and other entity concerned with current progress or involved in planning, coordination, or performance of future activities shall be represented at these meetings. All participants at the meeting shall be familiar with Project and authorized to conclude matters relating to the Work.

3. Agenda: Review and correct or approve minutes of previous progress meeting. Review other items of significance that could affect progress. Include topics for discussion as appropriate to status of Project.

a. Contractor's Construction Schedule: Review progress since the last meeting. Determine whether each activity is on time, ahead of schedule, or behind schedule, in relation to Contractor's construction schedule. Determine how construction behind schedule will be expedited; secure commitments from parties involved to do so. Discuss whether schedule revisions are required to ensure that current and subsequent activities will be completed within the Contract Time.

1). Review schedule for next period.

b. Review present and future needs of each entity present, including the following:

1). Interface requirements.

2). Sequence of operations.

3). Status of submittals.

4). Deliveries.

5). Off-site fabrication.

6). Access.

7). Site utilization.

8). Temporary facilities and controls.

9). Progress cleaning.

10). Quality and work standards.

11). Status of correction of deficient items.

12). Field observations.

13). Status of RFIs.

14). Status of proposal requests.

15). Pending changes.

16). Status of Change Orders.

17). Pending claims and disputes.

18). Documentation of information for payment requests.

4. Minutes: Entity responsible for conducting the meeting will record and distribute the meeting minutes to each party present and to parties requiring information.

a. Schedule Updating: Revise GC's construction schedule after each progress meeting where revisions to the schedule have been made or recognized. Issue revised schedule

concurrently with the report of each meeting.

PART 2 - PRODUCTS

NOT USED

PART 3 - EXECUTION

NOT USED

END OF SECTION

PART I - GENERAL

1.01 RELATED DOCUMENTS

A. Drawings and general provisions of the Contract, including General and Supplementary Conditions and Division 01 Specification Sections, apply to this Section.

1.02 SECTION INCLUDES

A. Coordination documents.

1.03 RELATED REQUIREMENTS

A. Section 01 30 00 - Administrative Requirements: Additional requirements for coordination.

B. Section 01 60 00 - Product Requirements: Spare parts and maintenance materials.

C. Section 01 78 00 - Closeout Submittals: Project record documents.

D. Section 01 79 00 - Demonstration and Training: Demonstration and Training.

1.04 MECHANICAL AND ELECTRICAL COORDINATOR

A. The Contractor will employ and pay for services of a person, technically qualified and administratively experienced in field coordination of the type of work required to be coordinated, for the duration of the Work.

PART 2 - PRODUCTS

NOT USED

PART 3 - EXECUTION

3.01 COORDINATION REQUIRED

A. Coordinate the work listed below:

1. Fire Suppression: Division 21.
2. Plumbing: Division 22.
3. Heating, Ventilating, and Air Conditioning: Division 23.
4. Electrical: Division 26.
5. Communications: Division 27.
6. Electronic Safety and Security: Division 28.

B. Coordinate progress schedules, including dates for submittals and for delivery of products.

C. Conduct meetings among subcontractors and others concerned, to establish and maintain coordination and schedules, and to resolve coordination matters in dispute.

D. Participate in progress meetings. Report on progress of work to be adjusted under coordination requirements, and any required changes in schedules. Transmit minutes of meetings and reports to concerned parties.

3.02 COORDINATION DOCUMENTS

A. Prepare coordination drawings to organize installation of products for efficient use of available space, for proper sequence of installation, and to identify potential conflicts.

B. Prepare a master schedule identifying responsibilities for activities that directly relate to this work, including submittals and temporary utilities; organize by specification section.

C. Identify electrical power characteristics and control wiring required for each item of equipment.

D. Maintain documents for the duration of the work, recording changes due to site instructions, modifications or adjustments.

3.03 COORDINATION OF SUBMITTALS

A. Review shop drawings, product data, and samples for compliance with Contract Documents and for coordination with related work. Transmit copies of reviewed documents to Architect.

B. Check field dimensions and clearances and relationship to available space and anchors.

C. Check compatibility with equipment and work of other sections, electrical characteristics, and operational

control requirements.

D. Check motor voltages and control characteristics.

E. Coordinate controls, interlocks, wiring of switches, and relays.

F. Coordinate wiring and control diagrams.

G. When changes in the work are made, review their effect on other work.

H. Verify information and coordinate maintenance of record documents.

3.04 COORDINATION OF SUBSTITUTIONS AND MODIFICATIONS

A. Review proposals and requests for substitution prior to submission to Architect.

B. Verify compliance with Contract Documents and for compatibility with work of other sections.

C. Submit with recommendation for action.

3.05 OBSERVATION OF WORK

A. Observe work for compliance with Contract Documents.

B. Maintain a list of observed deficiencies and defects; promptly submit.

3.06 DOCUMENTATION

A. Observe and maintain a record of tests. Record:

1. Specification section number and product name.
2. Name of Contractor, subcontractor.
3. Name of testing agency and name of inspector.
4. Name of manufacturer's representative present.
5. Date, time, and duration of tests.
6. Type of test, and results.
7. Retesting required.

B. Assemble background documentation for dispute and claim settlement.

C. Submit copies of documentation to Architect upon request.

3.07 EQUIPMENT START-UP

A. Verify utilities, connections, and controls are complete and equipment is in operable condition as required by Section 01 77 00.

B. Observe start-up and adjustments, test run, record time and date of start-up, and results.

C. Observe equipment demonstrations made to Owner; record times and additional information required for operation and maintenance manuals.

3.08 INSPECTION AND ACCEPTANCE OF EQUIPMENT

A. Prior to inspection, verify that equipment is tested, operational, clean, and ready for operation.

B. Assist Architect with review. Prepare list of items to be completed and corrected.

END OF SECTION

PART I - GENERAL

1.01 RELATED DOCUMENTS

A. Drawings and general provisions of the Contract, including General and Supplementary Conditions and Division 01 Specification Sections, apply to this Section.

1.02 SUMMARY

A. CPM schedule is a mutually-agreed construction plan which demonstrates to the Owner that the contractor has thought through all elements of the construction process, has conformed to the requirements of the contract, and can and will execute the activities within the contractual time frames. The CPM schedule also may be used as a tool for communication, re-examination of methodology, and settlement of disputes.

B. Section includes administrative and procedural requirements for documenting the progress of construction during performance of the Work, including the following:

1. Contractor's construction schedule.
2. Daily construction reports.
3. Field condition reports.

1.03 DEFINITIONS

A. Activity: A discrete part of a project that can be identified for planning, scheduling, monitoring, and controlling the construction project. Activities included in a construction schedule consume time and resources.

1. Critical Activity: An activity on the critical path that must start and finish on the planned early start and finish times.
2. Predecessor Activity: An activity that precedes another activity in the network. 3. Successor Activity: An activity that follows another activity in the network.

B. CPM: Critical path method, which is a method of planning and scheduling a construction project where activities are arranged based on activity relationships. Network calculations determine when activities can be performed and the critical path of the Project.

C. Critical Path: The longest connected chain of interdependent activities through the network schedule that establishes the minimum overall Project duration and contains no float.

D. Float: The measure of leeway in starting and completing an activity.

1. Float time is not for the exclusive use or benefit of either Owner or Contractor, but is a jointly owned, expiring Project resource available to both parties as needed to meet schedule milestones and Contract completion date.

1.04 INFORMATIONAL SUBMITTALS

A. Format for Submittals: Submit required submittals in the following format:

1. PDF electronic file.
2. Two paper copies.

B. Start-up Network Diagram: Of size required to display entire network for entire construction period. Show logic ties for activities.

C. Contractor's Construction Schedule: Initial schedule, of size required to display entire schedule for entire construction period.

1. Submit a working electronic copy of schedule, using software indicated, and labeled to comply with requirements for submittals. Include type of schedule (initial or updated) and date on label.

D. CPM Reports: Concurrent with CPM schedule, submit each of the following reports. Format for each activity in reports shall contain activity number, activity description, original duration, remaining duration, early start date, early finish date, late start date, late finish date, and total float in calendar days.

1. Activity Report: List of all activities sorted by activity number and then early start date, or actual start date if known.
2. Logic Report: List of preceding and succeeding activities for all activities, sorted in ascending order by activity number and then early start date, or actual start date if known.
3. Total Float Report: List of all activities sorted in ascending order of total float.

4. Earnings Report: Compilation of Contractor's total earnings from the Notice to Proceed until most recent Application for Payment.

E. Daily Construction Reports: Submit at monthly intervals.

F. Field Condition Reports: Submit at time of discovery of differing conditions.

1.05 COORDINATION

A. Coordinate preparation and processing of schedules and reports with performance of construction activities and with scheduling and reporting of separate subcontractors.

B. Coordinate Contractor's construction schedule with the schedule of values, list of subcontracts, submittal schedule, progress reports, payment requests, and other required schedules and reports.

1. Secure time commitments for performing critical elements of the Work from entities involved.

2. Coordinate each construction activity in the network with other activities and schedule them in proper sequence.

PART 2 - PRODUCTS

2.01 CONTRACTOR'S CONSTRUCTION SCHEDULE, GENERAL

A. Time Frame: Extend schedule from date established for the Notice to Proceed to date of Substantial Completion.

1. Contract completion date shall not be changed by submission of a schedule that shows an early completion date, unless specifically authorized by Change Order.

B. Activities: Treat each story or separate area as a separate numbered activity for each principal element of the Work. Comply with the following:

1. Activity Duration: Define activities so no activity is longer than 20 days, unless specifically allowed by Architect.

2. Procurement Activities: Include procurement process activities for the following long lead items and major items, requiring a cycle of more than 60 days, as separate activities in schedule. Procurement cycle activities include, but are not limited to, submittals, approvals, purchasing, fabrication, and delivery.

3. Submittal Review Time: Include review and resubmittal times indicated in Division 1 Section "Submittal Procedures" in schedule. Coordinate submittal review times in Contractor's construction schedule with submittal schedule.

4. Startup and Testing Time: Include not less than 15 days for startup and testing.

5. Substantial Completion: Indicate completion in advance of date established for Substantial Completion, and allow time for Architect's administrative procedures necessary for certification of Substantial Completion.

6. Punch List and Final Completion: Include not more than 30 days for punch list and final completion.

C. Constraints: Include constraints and work restrictions indicated in the Contract Documents and as follows in schedule, and show how the sequence of the Work is affected.

1. Phasing: Arrange list of activities on schedule by phase.

2. Work under More Than One Contract: Include a separate activity for each contract.

3. Work by Owner: Include a separate activity for each portion of the Work performed by Owner.

4. Work Restrictions: Show the effect of the following items on the schedule:

a. Coordination with existing construction.

b. Limitations of continued occupancies.

c. Uninterruptible services.

d. Partial occupancy before Substantial Completion.

e. Use of premises restrictions.

f. Provisions for future construction.

g. Seasonal variations.

h. Environmental control.

5. Work Stages: Indicate important stages of construction for each major portion of the Work.

D. Recovery Schedule: When periodic update indicates the Work is 14 or more calendar days behind the

current approved schedule, submit a separate recovery schedule indicating means by which Contractor intends to regain compliance with the schedule.

E. Computer Scheduling Software: Prepare schedules using current version of a program that has been developed specifically to manage construction schedules.

1. Utilize scheduling component of project Web site software specified in Division 01 Section "Project Management and Coordination", for Windows operating system.

2.02 CONTRACTOR'S CONSTRUCTION SCHEDULE (GANTT CHART)

A. Gantt-Chart Schedule: Submit a comprehensive, fully developed, horizontal Gantt-chart-type, Contractor's construction schedule within 30 days of date established for the Notice to Proceed.

B. Preparation: Indicate each significant construction activity separately. Identify first workday of each week with a continuous vertical line.

1. For construction activities that require three months or longer to complete, indicate an estimated completion percentage in 10 percent increments within time bar.

2.03 REPORTS

A. Daily Construction Reports: Prepare a daily construction report recording the following information concerning events at Project site:

1. List of subcontractors at Project site.
2. List of separate contractors at Project site.
3. Approximate count of personnel at Project site.
4. Equipment at Project site.
5. Material deliveries.
6. High and low temperatures and general weather conditions, including presence of rain or snow.
7. Accidents.
8. Meetings and significant decisions.
9. Unusual events.
10. Stoppages, delays, shortages, and losses.
11. Meter readings and similar recordings.
12. Emergency procedures.
13. Orders and requests of authorities having jurisdiction.
14. Change Orders received and implemented.
15. Construction Change Directives received and implemented.
16. Services connected and disconnected.
17. Equipment or system tests and startups.
18. Partial completions and occupancies.
19. Substantial Completions authorized.

B. Field Condition Reports: Immediately on discovery of a difference between field conditions and the Contract Documents, prepare and submit a detailed report. Submit with a Request for Information. Include a detailed description of the differing conditions, together with recommendations for changing the Contract Documents.

PART 3 - EXECUTION

3.01 CONTRACTOR'S CONSTRUCTION SCHEDULE

A. Contractor's Construction Schedule Updating: At monthly intervals, update schedule to reflect actual construction progress and activities. Issue schedule one week before each regularly scheduled progress meeting.

1. Revise schedule immediately after each meeting or other activity where revisions have been recognized or made. Issue updated schedule concurrently with the report of each such meeting.
2. Include a report with updated schedule that indicates every change, including, but not limited to, changes in logic, durations, actual starts and finishes, and activity durations.
3. As the Work progresses, indicate final completion percentage for each activity.

B. Distribution: Distribute copies of approved schedule to Architect, Owner, separate contractors, testing and inspecting agencies, and other parties identified by Contractor with a need-to-know schedule

responsibility.

1. Post copies in Project meeting rooms and temporary field offices.
2. When revisions are made, distribute updated schedules to the same parties and post in the same locations. Delete parties from distribution when they have completed their assigned portion of the Work and are no longer involved in performance of construction activities.

END OF SECTION

CONTRACTOR'S CONSTRUCTION REPORT

REPORT NO. _____

CONTRACTOR _____ DATE _____

JOB DESCRIPTION _____ CONTRACT COMPLETION DATE: _____

WORKING DAY YES _____ NO _____ WEATHER _____

CRAFTS WORKING THIS DATE:

CONTRACTOR		SUB-CONTRACTORS	
CRAFT	MEN	CRAFT	MEN
1.		1.	
2.		2.	
3.		3.	

DESCRIPTION OF WORK DONE THIS DATE: _____

INFORMATION REQUESTED FROM A & E: _____

CONTRACTOR'S SUPT. _____

PART 1 - GENERAL

1.01 RELATED DOCUMENTS

A. Drawings and general provisions of the Contract, including General and Supplementary Conditions and other Division 01 Specification Sections, apply to this Section.

1.02 SUMMARY

A. Section includes requirements for the submittal schedule and administrative and procedural requirements for submitting Shop Drawings, Product Data, Samples, and other submittals.

B. Related Sections:

1. Section 01 32 00 - Construction Progress Documentation for submitting schedules and reports, including GC's construction schedule.
2. Section 01 78 00 - Closeout Submittals for submitting record Drawings, record Specifications, and record Product Data.

1.03 DEFINITIONS

A. Action Submittals: Written and graphic information and physical samples that require Architect's responsive action.

B. Informational Submittals: Written and graphic information and physical samples that do not require Architect's responsive action. Submittals may be rejected for not complying with requirements.

C. Portable Document Format (PDF): An open standard file format licensed by Adobe Systems used for representing documents in a device-independent and display resolution-independent fixed-layout document format.

1.04 ACTION SUBMITTALS

A. Submittal Schedule: Submit a schedule of submittals, arranged in chronological order by dates required by construction schedule. Include time required for review, ordering, manufacturing, fabrication, and delivery when establishing dates. Include additional time required for making corrections or modifications to submittals noted by the Architect and additional time for handling and reviewing submittals required by those corrections.

1. Coordinate submittal schedule with list of subcontracts, the schedule of values, and Contractor's construction schedule.

1.05 SUBMITTAL ADMINISTRATIVE REQUIREMENTS

A. Architect's Digital Data Files: Electronic copies of CAD Drawings of the Contract Drawings will be provided by Architect for Contractor's use in preparing submittals.

1. Architect will furnish Contractor one set of digital data drawing files of the Contract Drawings for use in preparing Shop Drawings and Project record drawings.
    a. Architect makes no representations as to the accuracy or completeness of digital data drawing files as they relate to the Contract Drawings.
    b. Digital Drawing Software Program: The Contract Drawings are available in .DWG format. Other BIM formats may be made available on request if BIM has been utilized in the preparation of the Contract Documents.
    c. Contractor shall execute a data licensing agreement in the form of AIA Document C106, Digital Data Licensing Agreement.
    d. The following digital data files will be furnished for each appropriate discipline:
        1). Floor plans.
        2). Reflected ceiling plans.
        3). BIM model, if available.

B. Coordination: Coordinate preparation and processing of submittals with performance of construction activities.

1. Coordinate each submittal with fabrication, purchasing, testing, delivery, other submittals, and related activities that require sequential activity.
2. Submit all submittal items required for each Specification Section concurrently unless partial submittals for portions of the Work are indicated on approved submittal schedule.

3. Submit action submittals and informational submittals required by the same Specification Section as separate packages under separate transmittals.

4. Coordinate transmittal of different types of submittals for related parts of the Work so processing will not be delayed because of need to review submittals concurrently for coordination.

    a. Architect reserves the right to withhold action on a submittal requiring coordination with other submittals until related submittals are received.

C. Processing Time: Allow time for submittal review, including time for resubmittals, as follows. Time for review shall commence on Architect's receipt of submittal. No extension of the Contract Time will be authorized because of failure to transmit submittals enough in advance of the Work to permit processing, including resubmittals.

1. Initial Review: Allow 15 days for initial review of each submittal. Allow additional time if coordination with subsequent submittals is required. Architect will advise Contractor when a submittal being processed must be delayed for coordination.

2. Intermediate Review: If intermediate submittal is necessary, process it in same manner as initial submittal.

3. Resubmittal Review: Allow 15 days for review of each resubmittal.

4. Concurrent Consultant Review: Where the Contract Documents indicate that submittals may be transmitted simultaneously to Architect and to Architect's consultants, allow 15 days for review of each submittal. Submittal will be returned to Architect before being returned to Contractor.

D. Identification and Information: Place a permanent label or title block on each paper copy submittal item for identification.

1. Indicate name of firm or entity that prepared each submittal on label or title block.

2. Provide a space approximately 6 by 8 inches (150 by 200 mm) on label or beside title block to record GC's review and approval markings and action taken by Architect.

3. Include the following information for processing and recording action taken:

    a. Project name.

    b. Date.

    c. Name of Architect.

    d. Name of Contractor.

    e. Name of subcontractor.

    f. Name of supplier.

    g. Name of manufacturer.

    h. Submittal number or other unique identifier, including revision identifier.

        1). Submittal number shall use Specification Section number followed by a decimal point and then a sequential number (e.g., 061000.01). Resubmittals shall include an alphabetic suffix after another decimal point (e.g., 061000.01.A).

    i. Number and title of appropriate Specification Section.

    j. Drawing number and detail references, as appropriate.

    k. Location(s) where product is to be installed, as appropriate.

    l. Other necessary identification.

4. Transmittal for Paper Submittals: Assemble each submittal individually and appropriately for transmittal and handling. Transmit each submittal using a transmittal form. Architect will discard submittals received from sources other than Contractor.

    a. On an attached separate sheet, prepared on GC's letterhead, record relevant information, requests for data, revisions other than those requested by Architect on previous submittals, and deviations from requirements in the Contract Documents, including minor variations and limitations. Include same identification information as related submittal.

    b. Transmittal Form for Paper Submittals: Provide locations on form for the following information:

        1). Project name.

        2). Date.

        3). Destination (To:).

4). Source (From:).

5). Name and address of Architect.

6). Name of Contractor.

7). Name of firm or entity that prepared submittal.

9). Names of subcontractor, manufacturer, and supplier.

10) Category and type of submittal.

11) Submittal purpose and description.

12). Specification Section number and title.

13). Specification paragraph number or drawing designation and generic name for each of multiple items.

14). Drawing number and detail references, as appropriate.

15). Indication of full or partial submittal.

16). Transmittal number.

17). Submittal and transmittal distribution record.

18). Remarks.

19). Signature of transmitter.

E. Electronic Submittals: Identify and incorporate information in each electronic submittal file as follows:

1. Assemble complete submittal package into a single indexed file with links enabling navigation to each item.

2. Name file with submittal number or other unique identifier, including revision identifier.

a. File name shall use project identifier and Specification Section number followed by a decimal point and then a sequential number (e.g., LNHS-061000.01). Resubmittals shall include an alphabetic suffix after another decimal point (e.g., LNHS-061000.01.A).

3. Provide means for insertion to permanently record GC's review and approval markings and action taken by Architect.

4. Transmittal Form for Electronic Submittals: Use software-generated form from electronic project management software acceptable to Owner, containing the following information:

a. Project name.

b. Date.

c. Name and address of Architect.

d. Name of GC.

e. Name of Contractor.

f. Name of firm or entity that prepared submittal.

g. Names of subcontractor.

h. Category and type of submittal.

i. Submittal purpose and description.

j. Specification Section number and title.

k. Specification paragraph number or drawing designation and generic name for each of multiple items.

l. Drawing number and detail references, as appropriate.

m. Location(s) where product is to be installed, as appropriate.

n. Related physical samples submitted directly.

o. Indication of full or partial submittal.

p. Transmittal number.

q. Submittal and transmittal distribution record.

r. Other necessary identification.

s. Remarks.

F. Options: Identify options requiring selection by the Architect.

G. Deviations and Additional Information: On an attached separate sheet, prepared on Contractor's letterhead, record relevant information, requests for data, revisions other than those requested by

Architect on previous submittals, and deviations from requirements in the Contract Documents, including minor variations and limitations. Include same identification information as related submittal.

H. Additional Paper Copies: Unless additional copies are required for final submittal, and unless Architect observes noncompliance with provisions in the Contract Documents, initial submittal may serve as final submittal.

1. Submit one copy of submittal to concurrent reviewer in addition to specified number of copies to Architect.

I. Resubmittals: Make resubmittals in same form and number of copies as initial submittal.

1. Note date and content of previous submittal.

2. Note date and content of revision in label or title block and clearly indicate extent of revision.

3. Resubmit submittals until they are marked with approval notation from Architect's action stamp.

J. Distribution: Furnish copies of final submittals to manufacturers, subcontractors, suppliers, fabricators, installer's, authorities having jurisdiction, and others as necessary for performance of construction activities. Show distribution on transmittal forms.

K. Use for Construction: Use only final submittals that are marked with approval notation from Architect's action stamp.

PART 2 - PRODUCTS

2.01 SUBMITTAL PROCEDURES

A. General Submittal Procedure Requirements:

1. Submit electronic submittals via email as PDF electronic files.

a. Architect will return annotated file. Annotate and retain one copy of file as an electronic Project record document file.

2. Action Submittals: Submit three paper copies of each submittal, unless otherwise indicated. Architect will return two copies.

3. Informational Submittals: Submit two paper copies of each submittal, unless otherwise indicated. Architect will not return copies.

4. Closeout Submittals and Maintenance Material Submittals: Comply with requirements specified in Division 01 Section "Closeout Procedures."

5. Certificates and Certifications Submittals: Provide a statement that includes signature of entity responsible for preparing certification. Certificates and certifications shall be signed by an officer or other individual authorized to sign documents on behalf of that entity.

a. Provide a digital signature with digital certificate on electronically-submitted certificates and certifications where indicated.

b. Provide a notarized statement on original paper copy certificates and certifications where indicated.

6. Test and Inspection Reports Submittals: Comply with requirements specified in Section 01 40 00 - Quality Requirements.

B. Product Data: Collect information into a single submittal for each element of construction and type of product or equipment.

1. If information must be specially prepared for submittal because standard published data are not suitable for use, submit as Shop Drawings, not as Product Data.

2. Mark each copy of each submittal to show which products and options are applicable.

3. Include the following information, as applicable:

a. Manufacturer's catalog cuts.

b. Manufacturer's product specifications.

c. Standard color charts.

d. Statement of compliance with specified referenced standards.

e. Testing by recognized testing agency.

f. Application of testing agency labels and seals.

g. Notation of coordination requirements.

h. Availability and delivery time information.

4. For equipment, include the following in addition to the above, as applicable:
    a. Wiring diagrams showing factory-installed wiring.
    b. Printed performance curves.
    c. Operational range diagrams.
    d. Clearances required to other construction, if not indicated on accompanying Shop Drawings.
5. Submit Product Data before or concurrent with Samples.
6. Submit Product Data in the following format:
    a. PDF electronic file.
    b. Three paper copies of Product Data, unless otherwise indicated. Architect will return two copies.

C. Shop Drawings: Prepare Project-specific information, drawn accurately to scale. Do not base Shop Drawings on reproductions of the Contract Documents or standard printed data.
1. Preparation: Fully illustrate requirements in the Contract Documents. Include the following information, as applicable:
    a. Identification of products. b. Schedules.
    c. Compliance with specified standards.
    d. Notation of coordination requirements.
    e. Notation of dimensions established by field measurement.
    f. Relationship and attachment to adjoining construction clearly indicated.
    g. Seal and signature of professional engineer if specified.
2. Sheet Size: Except for templates, patterns, and similar full-size drawings, submit Shop Drawings on sheets at least 8-1/2 by 11 inches (215 by 280 mm) but no larger than 30 by 42 inches (750 by 1067 mm).
3. Submit Shop Drawings in the following format:
    a. PDF electronic file.
    b. Three opaque copies of each submittal. Architect will retain two copies; remainder will be returned.

D. Samples: Submit Samples for review of kind, color, pattern, and texture for a check of these characteristics with other elements and for a comparison of these characteristics between submittal and actual component as delivered and installed.
1. Transmit Samples that contain multiple, related components such as accessories together in one submittal package.
2. Identification: Attach label on unexposed side of Samples that includes the following:
    a. Generic description of Sample.
    b. Product name and name of manufacturer.
    c. Sample source.
    d. Number and title of applicable Specification Section.
3. Disposition: Maintain sets of approved Samples at Project site, available for quality-control comparisons throughout the course of construction activity. Sample sets may be used to determine final acceptance of construction associated with each set.
    a. Samples that may be incorporated into the Work are indicated in individual Specification Sections. Such Samples must be in an undamaged condition at time of use.
    b. Samples not incorporated into the Work, or otherwise designated as Owner's property, are the property of Contractor.
4. Samples for Initial Selection: Submit manufacturer's color charts consisting of units or sections of units showing the full range of colors, textures, and patterns available.
    a. Number of Samples: Submit one full set(s) of available choices where color, pattern, texture, or similar characteristics are required to be selected from manufacturer's product line. Architect will return submittal with options selected.
5. Samples for Verification: Submit full-size units or Samples of size indicated, prepared from same material to be used for the Work, cured and finished in manner specified, and physically identical with material or product proposed for use, and that show full range of color and texture

variations expected. Samples include, but are not limited to, the following: partial sections of manufactured or fabricated components; small cuts or containers of materials; complete units of repetitively used materials; swatches showing color, texture, and pattern; color range sets; and components used for independent testing and inspection.

a. Number of Samples: Submit three sets of Samples. Architect will retain two Sample sets; remainder will be returned. Mark up and retain one returned Sample set as a Project record sample.

1). If variation in color, pattern, texture, or other characteristic is inherent in material or product represented by a Sample, submit at least three sets of paired units that show approximate limits of variations.

E. Product Schedule: As required in individual Specification Sections, prepare a written summary indicating types of products required for the Work and their intended location. Include the following information in tabular form:

1. Submit product schedule in the following format:

a. PDF electronic file.

b. Three paper copies of product schedule or list, unless otherwise indicated. Architect will return two copies.

F. GC's Construction Schedule: Comply with requirements specified in Section 01 32 00 - Construction Progress Documentation.

G. Application for Payment: Comply with requirements specified in Section 01 20 00 – Price and Payment Procedures.

H. Schedule of Values: Comply with requirements specified in Section 01 20 00 – Price and Payment Procedures.

I. Subcontract List: Prepare a written summary identifying individuals or firms proposed for each portion of the Work, including those who are to furnish products or equipment fabricated to a special design. Use CSI Form 1.5A.

1. Submit subcontract list in the following format:

a. PDF electronic file.

b. Number of Copies: Three paper copies of subcontractor list, unless otherwise indicated. Architect will return two copies.

J. Coordination Drawings: Comply with requirements specified in Section 01 31 00 - Project Management and Coordination.

K. Qualification Data: Prepare written information that demonstrates capabilities and experience of firm or person. Include lists of completed projects with project names and addresses, contact information of architects and owners, and other information specified.

L. Welding Certificates: Prepare written certification that welding procedures and personnel comply with requirements in the Contract Documents. Submit record of Welding Procedure Specification and Procedure Qualification Record on American Welding Society (AWS) forms. Include names of firms and personnel certified.

M. Installer Certificates: Submit written statements on manufacturer's letterhead certifying that Installer complies with requirements in the Contract Documents and, where required, is authorized by manufacturer for this specific Project.

N. Manufacturer Certificates: Submit written statements on manufacturer's letterhead certifying that manufacturer complies with requirements in the Contract Documents. Include evidence of manufacturing experience where required.

O. Product Certificates: Submit written statements on manufacturer's letterhead certifying that product complies with requirements in the Contract Documents.

P. Material Certificates: Submit written statements on manufacturer's letterhead certifying that material complies with requirements in the Contract Documents.

Q. Material Test Reports: Submit reports written by a qualified testing agency, on testing agency's standard form, indicating and interpreting test results of material for compliance with requirements in the Contract Documents.

R. Product Test Reports: Submit written reports indicating current product produced by manufacturer complies with requirements in the Contract Documents. Base reports on evaluation of tests performed by manufacturer and witnessed by a qualified testing agency, or on comprehensive tests performed by a qualified testing agency.

S. Research Reports: Submit written evidence, from a model code organization acceptable to authorities

having jurisdiction, that product complies with building code in effect for Project.

T. Schedule of Tests and Inspections: Comply with requirements specified in Section 01 40 00 - Quality Requirements.

U. Preconstruction Test Reports: Submit reports written by a qualified testing agency, on testing agency's standard form, indicating and interpreting results of tests performed before installation of product, for compliance with performance requirements in the Contract Documents.

V. Compatibility Test Reports: Submit reports written by a qualified testing agency, on testing agency's standard form, indicating and interpreting results of compatibility tests performed before installation of product. Include written recommendations for primers and substrate preparation needed for adhesion.

W. Field Test Reports: Submit reports indicating and interpreting results of field tests performed either during installation of product or after product is installed in its final location, for compliance with requirements in the Contract Documents.

X. Maintenance Data: Comply with requirements specified in Section 01 78 00 - Closeout Submittals.

Y. Design Data: Prepare and submit written and graphic information, including, but not limited to, performance and design criteria, list of applicable codes and regulations, and calculations. Include list of assumptions and other performance and design criteria and a summary of loads. Include load diagrams if applicable. Provide name and version of software, if any, used for calculations. Include page numbers.

2.02 DELEGATED-DESIGN SERVICES

A. Performance and Design Criteria: Where professional design services or certifications by a design professional are specifically required of Contractor by the Contract Documents, provide products and systems complying with specific performance and design criteria indicated.

1. If criteria indicated are not sufficient to perform services or certification required, submit a written request for additional information to Architect.

B. Delegated-Design Services Certification: In addition to Shop Drawings, Product Data, and other required submittals, submit three paper copies of certificate, signed and sealed by the responsible design professional, for each product and system specifically assigned to Contractor to be designed or certified by a design professional.

1. Indicate that products and systems comply with performance and design criteria in the Contract Documents. Include list of codes, loads, and other factors used in performing these services.

PART 3 - EXECUTION

3.01 CONTRACTOR'S REVIEW

A. Action and Informational Submittals: Review each submittal and check for coordination with other Work of the Contract and for compliance with the Contract Documents. Note corrections and field dimensions. Mark with approval stamp before submitting to Architect.

B. Project Closeout and Maintenance/Material Submittals: Refer to requirements in Section 01 77 00 - Closeout Procedures.

C. Approval Stamp: Stamp each submittal with a uniform, approval stamp. Include Project name and location, submittal number, Specification Section title and number, name of reviewer, date of Contractor's approval, and statement certifying that submittal has been reviewed, checked, and approved for compliance with the Contract Documents.

3.02 ARCHITECT'S ACTION

A. General: Architect will not review submittals that do not bear GC's approval stamp and will return them without action.

B. Action Submittals: Architect will review each submittal, make marks to indicate corrections or modifications required, and return it. Architect will stamp each submittal with an action stamp and will mark stamp appropriately to indicate action.

C. Informational Submittals: Architect will review each submittal and will not return it, or will return it if it does not comply with requirements. Architect will forward each submittal to appropriate party.

D. Incomplete submittals are not acceptable, will be considered nonresponsive, and will be returned without review.

E. Submittals not required by the Contract Documents may not be reviewed and may be discarded.

END OF SECTION

PART 1 - GENERAL

1.01 RELATED DOCUMENTS

A. Drawings and general provisions of the Contract, including General and Supplementary Conditions and Division 01 Specification Sections, apply to this Section.

1.02 SECTION INCLUDES

A. Security measures including entry control and personnel identification.

1.03 SECURITY PROGRAM

A. Protect Work, existing premises and Owner's operations from theft, vandalism, and unauthorized entry.

B. Initiate program at project mobilization.

C. Maintain program throughout construction period until Owner occupancy.

1.04 ENTRY CONTROL

A. Restrict entrance of persons and vehicles into Project site and existing facilities.

B. Allow entrance only to authorized persons with proper identification.

C. Maintain log of workers and visitors, make available to Owner on request.

PART 2 - PRODUCTS

NOT USED

PART 3 - EXECUTION

NOT USED

END OF SECTION

PART 1 - GENERAL

1.01 RELATED DOCUMENTS

A. Drawings and general provisions of the Contract, including General and Supplementary Conditions and other Division 01 Specification Sections, apply to this Section.

1.02 SUMMARY

A. Section includes administrative and procedural requirements for quality assurance and quality control.

B. Testing and inspecting services are required to verify compliance with requirements specified or indicated. These services do not relieve Contractor of responsibility for compliance with the Contract Document requirements.

1. Specified tests, inspections, and related actions do not limit Contractor's other quality-assurance and -control procedures that facilitate compliance with the Contract Document requirements.

2. Specified tests, inspections, and related actions do not limit Contractor's other quality assurance and -control procedures that facilitate compliance with the Contract Document requirements.

3. Requirements for Contractor to provide quality-assurance and -control services required by Architect, Owner, or authorities having jurisdiction are not limited by provisions of this Section.

4. Specific test and inspection requirements are not specified in this Section.

C. Related Sections:

1. Divisions 2 through 33 Sections for specific test and inspection requirements.

1.03 DEFINITIONS

A. Quality-Assurance Services: Activities, actions, and procedures performed before and during execution of the Work to guard against defects and deficiencies and substantiate that proposed construction will comply with requirements.

B. Quality-Control Services: Tests, inspections, procedures, and related actions during and after execution of the Work to evaluate that actual products incorporated into the Work and completed construction comply with requirements. Services do not include contract enforcement activities performed by Architect.

C. Mockups: Full size physical assemblies that are constructed on-site. Mockups are constructed to verify selections made under sample submittals; to demonstrate aesthetic effects and, where indicated, qualities of materials and execution; to review coordination, testing, or operation; to show interface between dissimilar materials; and to demonstrate compliance with specified installation tolerances. Mockups are not Samples. Unless otherwise indicated, approved mockups establish the standard by which the Work will be judged.

D. Preconstruction Testing: Tests and inspections performed specifically for the Project before products and materials are incorporated into the Work to verify performance or compliance with specified criteria.

E. Product Testing: Tests and inspections that are performed by an NRTL, an NVLAP, or a testing agency qualified to conduct product testing and acceptable to authorities having jurisdiction, to establish product performance and compliance with specified requirements.

F. Source Quality-Control Testing: Tests and inspections that are performed at the source, i.e., plant, mill, factory, or shop.

G. Field Quality-Control Testing: Tests and inspections that are performed on-site for installation of the Work and for completed Work.

H. Testing Agency: An entity engaged to perform specific tests, inspections, or both. Testing laboratory shall mean the same as testing agency.

I. Installer/Applicator/Erector: Subcontractor, or Sub-subcontractor, to perform a particular construction operation, including installation, erection, application, and similar operations.

1. Use of trade-specific terminology in referring to a trade or entity does not require that certain construction activities be performed by accredited or unionized individuals, or that requirements specified apply exclusively to specific trade or trades.

J. Experienced: When used with an entity or individual, "experienced" means having successfully completed a minimum of five previous projects similar in nature, size, and extent to this Project; being familiar with special requirements indicated; and having complied with requirements of authorities having jurisdiction.

1.04 CONFLICTING REQUIREMENTS

A. Referenced Standards: If compliance with two or more standards is specified and the standards establish different or conflicting requirements for minimum quantities or quality levels, comply with the most stringent requirement. Refer conflicting requirements that are different, but apparently equal, to Architect for a decision before proceeding.

B. Minimum Quantity or Quality Levels: The quantity or quality level shown or specified shall be the minimum provided or performed. The actual installation may comply exactly with the minimum quantity or quality specified, or it may exceed the minimum within reasonable limits. To comply with these requirements, indicated numeric values are minimum or maximum, as appropriate, for the context of requirements. Refer uncertainties to Architect for a decision before proceeding.

1.05 ACTION SUBMITTALS

A. Shop Drawings: For integrated exterior mockups, provide plans, sections, and elevations, indicating materials and size of mockup construction.

1. Indicate manufacturer and model number of individual components.
2. Provide axonometric drawings for conditions difficult to illustrate in two dimensions.

1.06 INFORMATIONAL SUBMITTALS

A. Contractor's Quality-Control Plan: For quality-assurance and quality-control activities and responsibilities.

B. Qualification Data: For Contractor's quality-control personnel.

C. Testing Agency Qualifications: For testing agencies specified in "Quality Assurance" Article to demonstrate their capabilities and experience. Include proof of qualifications in the form of a recent report on the inspection of the testing agency by a recognized authority.

D. Schedule of Tests and Inspections: Prepare in tabular form and include the following:

1. Specification Section number and title.
2. Entity responsible for performing tests and inspections.
3. Description of test and inspection.
4. Identification of applicable standards.
5. Identification of test and inspection methods.
6. Number of tests and inspections required.
7. Time schedule or time span for tests and inspections.
8. Requirements for obtaining samples.
9. Unique characteristics of each quality-control service.

1.07 CONTRACTOR'S QUALITY-CONTROL PLAN

A. Quality-Control Plan, General: Submit quality-control plan within 10 days of Notice to Proceed, and not less than five days prior to preconstruction conference. Submit in format acceptable to Architect. Identify personnel, procedures, controls, instructions, tests, records, and forms to be used to carry out Contractor's quality-assurance and quality-control responsibilities. Coordinate with Contractor's construction schedule.

B. Quality-Control Personnel Qualifications: Engage qualified full-time personnel trained and experienced in managing and executing quality-assurance and quality-control procedures similar in nature and extent to those required for Project.

1. Project quality-control manager may also serve as Project superintendent.

C. Submittal Procedure: Describe procedures for ensuring compliance with requirements through review and management of submittal process. Indicate qualifications of personnel responsible for submittal review.

D. Testing and Inspection: In quality-control plan, include a comprehensive schedule of Work requiring testing or inspection, including the following:

1. Contractor-performed tests and inspections including subcontractor-performed tests and inspections. Include required tests and inspections and Contractor-elected tests and inspections.
2. Special inspections required by authorities having jurisdiction and indicated on the "Statement of Special Inspections."

E. Continuous Inspection of Workmanship: Describe process for continuous inspection during construction to identify and correct deficiencies in workmanship in addition to testing and inspection specified. Indicate types of corrective actions to be required to bring work into compliance with standards of workmanship established by Contract requirements and approved mockups.

F. Monitoring and Documentation: Maintain testing and inspection reports including log of approved and

rejected results. Include work Architect has indicated as nonconforming or defective. Indicate corrective actions taken to bring nonconforming work into compliance with requirements. Comply with requirements of authorities having jurisdiction.

1.08 REPORTS AND DOCUMENTS

A. Test and Inspection Reports: Prepare and submit certified written reports specified in other Sections. Include the following:

1. Date of issue.
2. Project title and number.
3. Name, address, and telephone number of testing agency.
4. Dates and locations of samples and tests or inspections.
5. Names of individuals making tests and inspections.
6. Description of the Work and test and inspection method.
7. Identification of product and Specification Section.
8. Complete test or inspection data.
9. Test and inspection results and an interpretation of test results.
10. Record of temperature and weather conditions at time of sample taking and testing and inspecting.
11. Comments or professional opinion on whether tested or inspected Work complies with the Contract Document requirements.
12. Name and signature of laboratory inspector.
13. Recommendations on retesting and reinspecting.

B. Manufacturer's Field Reports: Prepare written information documenting tests and inspections specified in other Sections. Include the following:

1. Name, address, and telephone number of representative making report.
2. Statement on condition of substrates and their acceptability for installation of product.
3. Statement that products at Project site comply with requirements.
4. Summary of installation procedures being followed, whether they comply with requirements and, if not, what corrective action was taken.
5. Results of operational and other tests and a statement of whether observed performance complies with requirements.
6. Statement whether conditions, products, and installation will affect warranty.
7. Other required items indicated in individual Specification Sections.

C. Factory-Authorized Service Representative's Reports: Prepare written information documenting manufacturer's factory-authorized service representative's tests and inspections specified in other Sections. Include the following:

1. Name, address, and telephone number of factory-authorized service representative making report.
2. Statement that equipment complies with requirements.
3. Results of operational and other tests and a statement of whether observed performance complies with requirements.
4. Statement whether conditions, products, and installation will affect warranty.
5. Other required items indicated in individual Specification Sections.

D. Permits, Licenses, and Certificates: For Owner's records, submit copies of permits, licenses, certifications, inspection reports, releases, jurisdictional settlements, notices, receipts for fee payments, judgments, correspondence, records, and similar documents, established for compliance with standards and regulations bearing on performance of the Work.

1.09 QUALITY ASSURANCE

A. General: Qualifications paragraphs in this article establish the minimum qualification levels required; individual Specification Sections specify additional requirements.

B. Manufacturer Qualifications: A firm experienced in manufacturing products or systems similar to those indicated for this Project and with a record of successful in-service performance, as well as sufficient production capacity to produce required units.

C. Fabricator Qualifications: A firm experienced in producing products similar to those indicated for this Project and with a record of successful in-service performance, as well as sufficient production capacity to produce required units.

D. Installer Qualifications: A firm or individual experienced in installing, erecting, or assembling work similar in material, design, and extent to that indicated for this Project, whose work has resulted in construction with a record of successful in-service performance.

E. Professional Engineer Qualifications: A professional engineer who is legally qualified to practice in jurisdiction where Project is located and who is experienced in providing engineering services of the kind indicated. Engineering services are defined as those performed for installations of the system, assembly, or product that are similar to those indicated for this Project in material, design, and extent.

F. Specialists: Certain Specification Sections require that specific construction activities shall be performed by entities who are recognized experts in those operations. Specialists shall satisfy qualification requirements indicated and shall be engaged for the activities indicated.

1. Requirements of authorities having jurisdiction shall supersede requirements for specialists.

G. Testing Agency Qualifications: An NRTL, an NVLAP, or an independent agency with the experience and capability to conduct testing and inspecting indicated, as documented according to ASTM E 329; and with additional qualifications specified in individual Sections; and where required by authorities having jurisdiction, that is acceptable to authorities.

1. NRTL: A nationally recognized testing laboratory according to 29 CFR 1910.7.

2. NVLAP: A testing agency accredited according to NIST's National Voluntary Laboratory Accreditation Program.

H. Manufacturer's Representative Qualifications: An authorized representative of manufacturer who is trained and approved by manufacturer to observe and inspect installation of manufacturer's products that are similar in material, design, and extent to those indicated for this Project.

I. Preconstruction Testing: Where testing agency is indicated to perform preconstruction testing for compliance with specified requirements for performance and test methods, comply with the following:

1. Contractor responsibilities include the following:

a. Provide test specimens representative of proposed products and construction.

b. Submit specimens in a timely manner with sufficient time for testing and analyzing results to prevent delaying the Work.

c. Build laboratory mockups at testing facility using personnel, products, and methods of construction indicated for the completed Work.

d. When testing is complete, remove test specimens, assemblies, mockups, and laboratory mockups; do not reuse products on Project.

2. Testing Agency Responsibilities: Submit a certified written report of each test, inspection, and similar quality-assurance service to Architect, with copy to Contractor. Interpret tests and inspections and state in each report whether tested and inspected work complies with or deviates from the Contract Documents.

J. Mockups: Before installing portions of the Work requiring mockups, build mockups for each form of construction and finish required to comply with the following requirements, using materials indicated for the completed Work:

1. Build mockups in location and of size indicated or, if not indicated, as directed by Architect.

2. Notify Architect seven days in advance of dates and times when mockups will be constructed.

3. Demonstrate the proposed range of aesthetic effects and workmanship.

4. Obtain Architect's approval of mockups before starting work, fabrication, or construction.

a. Allow seven days for initial review and each re-review of each mockup.

5. Maintain mockups during construction in an undisturbed condition as a standard for judging the completed Work.

6. Demolish and remove mockups when directed, unless otherwise indicated.

K. Laboratory Mockups: Comply with requirements of preconstruction testing and those specified in individual Specification Sections.

1.10 QUALITY CONTROL

A. Owner Responsibilities: Where quality-control services are indicated as Owner's responsibility, Owner will engage a qualified testing agency to perform these services.

1. Owner will furnish Contractor with names, addresses, and telephone numbers of testing agencies

engaged and a description of types of testing and inspecting they are engaged to perform.

2. Payment for these services will be made from testing and inspecting allowances, as authorized by Change Orders.

3. Costs for retesting and reinspecting construction that replaces or is necessitated by work that failed to comply with the Contract Documents will be charged to Contractor, and the Contract Sum will be adjusted by Change Order.

B. Contractor Responsibilities: Tests and inspections not explicitly assigned to Owner are Contractor's responsibility. Perform quality-control activities required to verify that the Work complies with requirements, whether specified or not.

1. Unless otherwise indicated, provide quality-control services specified and those required by authorities having jurisdiction. Perform quality-control services required of Contractor by authorities having jurisdiction, whether specified or not.

2. Where services are indicated as Contractor's responsibility, engage a qualified testing agency to perform these quality-control services.

a. Contractor shall not employ same entity engaged by Owner, unless agreed to in writing by Owner.

3. Notify testing agencies at least 24 hours in advance of time when Work that requires testing or inspecting will be performed.

4. Where quality-control services are indicated as Contractor's responsibility, submit a certified written report, in duplicate, of each quality-control service.

5. Testing and inspecting requested by Contractor and not required by the Contract Documents are Contractor's responsibility.

6. Submit additional copies of each written report directly to authorities having jurisdiction, when they so direct.

C. Manufacturer's Field Services: Where indicated, engage a manufacturer's representative to observe and inspect the Work. Manufacturer's representative's services include examination of substrates and conditions, verification of materials, inspection of completed portions of the Work, and submittal of written reports.

D. Retesting/Reinspecting: Regardless of whether original tests or inspections were Contractor's responsibility, provide quality-control services, including retesting and reinspecting, for construction that replaced Work that failed to comply with the Contract Documents.

E. Manufacturer's Technical Services: Where indicated, engage a manufacturer's technical representative to observe and inspect the Work. Manufacturer's technical representative's services include participation in preinstallation conferences, examination of substrates and conditions, verification of materials, observation of Installer activities, inspection of completed portions of the Work, and submittal of written reports.

F. Testing Agency Responsibilities: Cooperate with Architect and Contractor in performance of duties. Provide qualified personnel to perform required tests and inspections.

1. Notify Architect and Contractor promptly of irregularities or deficiencies observed in the Work during performance of its services.

2. Determine the location from which test samples will be taken and in which in-situ tests are conducted.

3. Conduct and interpret tests and inspections and state in each report whether tested and inspected work complies with or deviates from requirements.

4. Submit a certified written report, in duplicate, of each test, inspection, and similar quality-control service through Contractor.

5. Do not release, revoke, alter, or increase the Contract Document requirements or approve or accept any portion of the Work.

6. Do not perform any duties of Contractor.

G. Associated Services: Cooperate with agencies performing required tests, inspections, and similar quality-control services, and provide reasonable auxiliary services as requested. Notify agency sufficiently in advance of operations to permit assignment of personnel. Provide the following:

1. Access to the Work.

2. Incidental labor and facilities necessary to facilitate tests and inspections.

3. Adequate quantities of representative samples of materials that require testing and inspecting. Assist agency in obtaining samples.

4. Facilities for storage and field curing of test samples.
5. Delivery of samples to testing agencies.
6. Preliminary design mix proposed for use for material mixes that require control by testing agency.
7. Security and protection for samples and for testing and inspecting equipment at Project site.

H. Coordination: Coordinate sequence of activities to accommodate required quality-assurance and -control services with a minimum of delay and to avoid necessity of removing and replacing construction to accommodate testing and inspecting.
1. Schedule times for tests, inspections, obtaining samples, and similar activities.

I. Schedule of Tests and Inspections: Prepare a schedule of tests, inspections, and similar quality-control services required by the Contract Documents as a component of Contractor's quality-control plan. Coordinate and submit concurrently with Contractor's construction schedule. Update as the Work progresses.
1. Distribution: Distribute schedule to Owner, Architect, testing agencies, and each party involved in performance of portions of the Work where tests and inspections are required.

1.11 SPECIAL TESTS AND INSPECTIONS

A. Special Tests and Inspections: Owner will engage a qualified testing agency/special inspector to conduct special tests and inspections required by authorities having jurisdiction as the responsibility of Owner, and as follows:

B. Special Tests and Inspections: Conducted by a qualified testing agency/special inspector as required by authorities having jurisdiction, as indicated in individual Specification Sections, and as follows:
1. Verifying that manufacturer maintains detailed fabrication and quality-control procedures and reviewing the completeness and adequacy of those procedures to perform the Work.
2. Notifying Architect and Contractor promptly of irregularities and deficiencies observed in the Work during performance of its services.
3. Submitting a certified written report of each test, inspection, and similar quality-control service to Architect with copy to Contractor and to authorities having jurisdiction.
4. Submitting a final report of special tests and inspections at Substantial Completion, which includes a list of unresolved deficiencies.
5. Interpreting tests and inspections and stating in each report whether tested and inspected work complies with or deviates from the Contract Documents.
6. Retesting and reinspecting corrected work.

PART 2 - PRODUCTS

NOT USED

PART 3 - EXECUTION

3.01 TEST AND INSPECTION LOG

A. Test and Inspection Log: Prepare a record of tests and inspections. Include the following:
1. Date test or inspection was conducted.
2. Description of the Work tested or inspected.
3. Date test or inspection results were transmitted to Architect.
4. Identification of testing agency or special inspector conducting test or inspection.

B. Maintain log at Project site. Post changes and revisions as they occur. Provide access to test and inspection log for Architect's, Commissioning Authority's, reference during normal working hours.

3.01 REPAIR AND PROTECTION

A. General: On completion of testing, inspecting, sample taking, and similar services, repair damaged construction and restore substrates and finishes.
1. Provide materials and comply with installation requirements specified in other Specification Sections or matching existing substrates and finishes. Restore patched areas and extend restoration into adjoining areas with durable seams that are as invisible as possible. Comply with the Contract Document requirements for cutting and patching in Section 01 73 00 - Execution.

B. Protect construction exposed by or for quality-control service activities.

C. Repair and protection are Contractor's responsibility, regardless of the assignment of responsibility for quality-control services.

END OF SECTION

PART 1 - GENERAL

1.01 RELATED DOCUMENTS

A. Drawings and general provisions of the Contract, including General and Supplementary Conditions and Division 01 Specification Sections, apply to this Section.

1.02 SUMMARY

A. Regulatory requirements applicable to this project are the following (most recent edition adopted by Authority Having Jurisdiction, Including all applicable Amendments and Supplements):

1. 29 CFR 1910 -Occupational Safety and Health Standards; as a work place.
2. ICC (IFC) -ICC International Fire Code.
3. ICC (IBC) -ICC International Building Code.
4. ICC (IPC) -ICC International Plumbing Code.
5. ICC (IMC) -ICC International Mechanical Code.
6. ICC (IFGC) -ICC International Fuel Gas Code.
7. ICC (IECC) -ICC International Energy Conservation Code.
8. NFPA 101 -Life Safety Code.
9. NFPA 70 -National Electrical Code.

1.03 RELATED REQUIREMENTS

A. Section 01 40 00 - Quality Requirements.

1.04 QUALITY ASSURANCE

A. Designer Qualifications: Where delegated engineering design is to be performed under the construction contract provide the direct supervision of a Professional Engineer experienced in design of this type of work and licensed in Oklahoma.

PART 2 - PRODUCTS

NOT USED

PART 3 - EXECUTION

NOT USED

END OF SECTION

PART 1 - GENERAL

1.01 RELATED DOCUMENTS

A. Drawings and general provisions of the Contract, including General and Supplementary Conditions and other Division 01 Specification Sections, apply to this Section.

1.02 SUMMARY

A. This section supplements the definitions contained in the General Conditions.

B. Other definitions are included in individual specification sections.

1.03 DEFINITIONS

A. General: Basic Contract definitions are included in the Conditions of the Contract.

B. "Approved": When used to convey Architect's action on Contractor's submittals, applications, and requests, "approved" is limited to Architect's duties and responsibilities as stated in the Conditions of the Contract.

C. "Directed": A command or instruction by Architect. Other terms including "requested," "authorized," "selected," "required," and "permitted" have the same meaning as "directed."

D. "Indicated": Requirements expressed by graphic representations or in written form on Drawings, in Specifications, and in other Contract Documents. Other terms including "shown," "noted," "scheduled," and "specified" have the same meaning as "indicated."

E. "Regulations": Laws, ordinances, statutes, and lawful orders issued by authorities having jurisdiction, and rules, conventions, and agreements within the construction industry that control performance of the Work.

F. "Furnish": Supply and deliver to Project site, ready for unloading, unpacking, assembly, installation, and similar operations.

G. "Install": Operations at Project site including unloading, temporarily storing, unpacking, assembling, erecting, placing, anchoring, applying, working to dimension, finishing, curing, protecting, cleaning, and similar operations.

H. "Provide": Furnish and install, complete and ready for the intended use.

I. "Project Site": Space available for performing construction activities. The extent of Project site is shown on Drawings and may or may not be identical with the description of the land on which Project is to be built.

J. Project Manual: The book-sized volume that includes the procurement requirements (if any), the contracting requirements, and the specifications.

1.04 INDUSTRY STANDARDS

A. Applicability of Standards: Unless the Contract Documents include more stringent requirements, applicable construction industry standards have the same force and effect as if bound or copied directly into the Contract Documents to the extent referenced. Such standards are made a part of the Contract Documents by reference.

B. Publication Dates: Comply with standards in effect as of date of the Contract Documents unless otherwise indicated.

C. Copies of Standards: Each entity engaged in construction on Project should be familiar with industry standards applicable to its construction activity. Copies of applicable standards are not bound with the Contract Documents.

1. Where copies of standards are needed to perform a required construction activity, obtain copies directly from publication source.

1.05 ABBREVIATIONS AND ACRONYMS

A. Industry Organizations: Where abbreviations and acronyms are used in Specifications or other Contract Documents, they shall mean the recognized name of the entities indicated in Thomson Gale's "Encyclopedia of Associations" or in Columbia Books' "National Trade & Professional Associations of the U.S."

B. Code Agencies: Where abbreviations and acronyms are used in Specifications or other Contract Documents, they shall mean the recognized name of the entities in the following list. Names, telephone numbers, and Web sites are subject to change and are believed to be accurate and up-to-date as of the date of the Contract Documents.

IAPMO	International Association of Plumbing and Mechanical Officials www.iapmo.org	(909)	472-4100
ICC	International Code Council www.iccsafe.org	(888)	422-7233
ICC-ES	ICC Evaluation Service, Inc. www.icc-es.org	(800) (562)	423-6587 699-0543

C. Federal Government Agencies: Where abbreviations and acronyms are used in Specifications or other Contract Documents, they shall mean the recognized name of the entities s in the following list. Names, telephone numbers, and Web sites are subject to change and are believed to be accurate and up-to-date as of the date of the Contract Documents.

COE	Army Corps of Engineers www.usace.army.mil	(202)	761-0011
CPSC	Consumer Product Safety Commission www.cpsc.gov	(800) (301)	638-2772 504-7923
DOC	Department of Commerce www.commerce.gov	(202)	482-2000
DOD	Department of Defense http://dodssp.daps.dla.mil	(215)	697-6257
DOE	Department of Energy www.energy.gov	(202)	586-9220
EPA	Environmental Protection Agency www.epa.gov	(202)	272-0167
FAA	Federal Aviation Administration www.faa.gov	(866)	835-5322
FCC	Federal Communications Commission www.fcc.gov	(888)	225-5322
FDA	Food and Drug Administration www.fda.gov	(888)	463-6332
GSA	General Services Administration www.gsa.gov	(800)	488-3111
HUD	Department of Housing and Urban Development www.hud.gov	(202)	708-1112
LBL	Lawrence Berkeley National Laboratory www.lbl.gov	(510)	486-4000
NCHRP	National Cooperative Highway Research Program (See TRB)		
NIST	National Institute of Standards and Technology www.nist.gov	(301)	975-6478
OSHA	Occupational Safety & Health Administration www.osha.gov	(800) (202)	321-6742 693-1999
PBS	Public Buildings Service (See GSA)		
PHS	Office of Public Health and Science http://www.hhs.gov/ophs/	(202)	690-7694
RUS	Rural Utilities Service (See USDA)	(202)	720-9540
SD	State Department www.state.gov	(202)	647-4000
TRB	Transportation Research Board http://gulliver.trb.org	(202)	334-2934
USDA	Department of Agriculture www.usda.gov	(202)	720-2791
USP	U.S. Pharmacopeia www.usp.org	(800)	227-8772
USPS	Postal Service	(202)	268-2000

www.usps.com

D. Standards and Regulations: Where abbreviations and acronyms are used in Specifications or other Contract Documents, they shall mean the recognized name of the standards and regulations in the following list. Names, telephone numbers, and Web sites are subject to change and are believed to be accurate and up-to-date as of the date of the Contract Documents.

ADAAG	Americans with Disabilities Act (ADA) Architectural Barriers Act (ABA) Accessibility Guidelines for Buildings and Facilities Available from U.S. Access Board www.access-board.gov	(800) 872-2253 (202) 272-0080
CFR	Code of Federal Regulations Available from Government Printing Office www.gpoaccess.gov/cfr/index.html	(866) 512-1800 (202) 512-1800
DOD	Department of Defense Military Specifications and Standards Available from Department of Defense Single Stock Point http://dodssp.daps.dla.mil	(215) 697-2664
DSCC	Defense Supply Center Columbus (See FS)	
FED-STD	Federal Standard (See FS)	
FS	Federal Specification Available from Department of Defense Single Stock Point http://dodssp.daps.dla.mil/ Available from Defense Standardization Program www.dsp.dla.mil Available from General Services Administration www.gsa.gov Available from National Institute of Building Sciences www.wbdg.org/ccb	(215) 697-2664 (202) 619-8925 (202) 289-7800
FTMS	Federal Test Method Standard (See FS)	
MIL	(See MILSPEC)	
MIL-STD	(See MILSPEC)	
MILSPEC	Military Specification and Standards Available from Department of Defense Single Stock Point http://dodssp.daps.dla.mil	(215) 697- 2664
UFAS	Uniform Federal Accessibility Standards Available from Access Board www.access-board.gov	(800) 872-2253 (202) 272-0080

E. State Government Agencies: Where abbreviations and acronyms are used in Specifications or other Contract Documents, they shall mean the recognized name of the entities in the following list. Names, telephone numbers, and Web sites are subject to change and are believed to be accurate and up-to-date as of the date of the Contract Documents.

ODEQ	Oklahoma Department of Environmental Quality http://www.deq.state.ok.us/	(405) 702-0100
ODOC	Oklahoma Department of Corrections http://doc.ok.gov//	(405) 425-2500
ODOT	Oklahoma Department of Transportation https://ok.gov/odot/	
OMES	Oklahoma office of management and Enterprise Services https://www.ok.gov/OSF/	(405) 521-2141
OSBI	Oklahoma State Bureau of Investigation https://www.ok.gov/osbi/	(405) 848-6724
OSDE	Oklahoma State Department of Education http://www.sde.ok.gov/sde/	(405) 521-3301
OSDH	Oklahoma State Department of Health https://www.ok.gov/health/	(405) 271-5600
OUBCC	Oklahoma Uniform Building Code Commission	(405) 521-6501

https://www.ok.gov/oubcc/

1.06 QUALITY ASSURANCE

A. For products or workmanship specified by reference to a document or documents not included in the Project Manual, also referred to as reference standards, comply with requirements of the standard, except when more rigid requirements are specified or are required by applicable codes.

B. Conform to reference standard of date of issue specified in this section, except where a specific date is established by applicable code.

C. Should specified reference standards conflict with Contract Documents, request clarification from the Architect before proceeding.

D. Neither the contractual relationships, duties, or responsibilities of the parties in Contract nor those of the Architect shall be altered by the Contract Documents by mention or inference otherwise in any reference document.

PART 2 - PRODUCTS

NOT USED

PART 3 – EXECUTION

NOT USED

END OF SECTION

DIVISION 01 - GENERAL REQUIREMENTS

CODE-REQUIRED SPECIAL INSPECTIONS AND PROCEDURES SECTION 01 45 33

PART 1 - GENERAL

1.01 RELATED DOCUMENTS

A. Drawings and general provisions of Contract, including General and Supplementary Conditions and other Division-01 Specification Sections apply to work specified in this Section.

1.02 SCOPE OF WORK

A. The Owner's Testing Laboratory: An independent testing laboratory will sample and test materials as they are being installed for compliance with acceptance criteria as specified and report and interpret the results. The laboratory shall monitor and report on the installation of constructed work and shall perform tests on the completed construction as required to indicate Contractor's compliance with the various material specifications governing this work. The owner shall be responsible for paying the testing laboratory for these services.

B. The Contractor shall not engage the same testing laboratory for construction services as the Owner has for quality assurance testing, unless agreed to by the Owner.

1.03 RELATED REQUIREMENTS

A. Section 01 25 00 - Submittal Procedures.

B. Section 01 40 00 - Quality Requirements.

C. Section 01 42 00 - References.

D. Section 01 60 00 - Product Requirements: Requirements for material and product quality.

1.04 DEFINITIONS

A. Code or Building Code: current adopted Edition of the International Building Code and, more specifically, Chapter 17 - Special Inspections and Tests.

B. Authority Having Jurisdiction (AHJ): Agency or individual officially empowered to enforce the building, fire and life safety code requirements of the permitting jurisdiction in which the Project is located.

C. Special Inspection:

1. Special inspections are inspections and testing of materials, installation, fabrication, erection or placement of components and connections mandated by the AHJ that also require special expertise to ensure compliance with the approved contract documents and the referenced standards.

2. Special inspections are separate from and independent of tests and inspections conducted by Owner or Contractor for the purposes of quality assurance and contract administration.

1.05 REFERENCE STANDARDS

(Current Edition when furnishing Inspections or conducting Tests)

A. ACI 318 -Building Code Requirements for Structural Concrete and Commentary.

B. ACI 530/530.1/ERTA -Building Code Requirements and Specification for Masonry Structures and Related Commentaries.

C. AISC 360 -Specification for Structural Steel Buildings.

D. ASTM C31/C31M -Standard Practice for Making and Curing Concrete Test Specimens in the Field.

E. ASTM C172/C172M -Standard Practice for Sampling Freshly Mixed Concrete.

F. ASTM D3740 -Standard Practice for Minimum Requirements for Agencies Engaged in the Testing and/or Inspection of Soil and Rock as Used in Engineering Design and Construction.

G. ASTM E543 -Standard Specification for Agencies Performing Nondestructive Testing.

H. ASTM E2570 -Standard Test Methods for Evaluating Water-Resistive Barrier (WRB) Coatings Used under Exterior Insulation and Finish Systems (EIFS) or EIFS with Drainage.

I. AWS D1.1/D1.1M -Structural Welding Code - Steel.

J. AWS D1.3 -Structural Welding Code - Sheet Steel.

K. AWS D1.4/D1.4M -Structural Welding Code - Reinforcing Steel.

1.06 SPECIAL INSPECTIONS

A. The Owner's Testing Laboratory or a separate agency shall serve as a Special Inspector to provide Special Inspection services for the items listed below. The scope of such services for each item shall be as defined

in the Building Code or as defined in the local building code of the jurisdiction wherein the project is located. These inspections are mandatory for conformance to the legal requirements of the building code and shall be in addition to the inspections and tests otherwise defined in this specification.

1. Reinforcing Steel Placement
2. Concrete Work
3. Welding of Reinforcing Steel
4. Bolts to be Installed in Concrete and Their Installation to allow for higher allowable tension values
5. Prestressing Tendons Placement
6. Prestressing Operation
7. Grouting of Bonded Prestressing Tendons
8. Precast Concrete Erection
9. Inspection of Structural Steel, Bolting, and Welding Material
10. Welding of Structural Steel
11. High-Strength Bolting
12. Compacted Earth Fill
13. Pile Foundations
14. Pier Foundations
15. Shotcrete Work
16. Masonry Work
17. Wood Construction

B. Qualifications of Special Inspector: The special inspector shall be a qualified person who shall demonstrate competence, to the satisfaction of the Building Official, for inspection of the particular type of construction or operation being inspected. The Special Inspector shall meet the legal qualifications of the building code having jurisdiction.

C. Duties and Responsibilities of the Special Inspector:

1. The special inspector shall observe the work assigned to ascertain that, to the best of his/her knowledge, it is in conformance with the approved design drawings and specifications.
2. The special inspector shall furnish inspection reports to the Building Official, the Architect/Engineer, and the Owner. All discrepancies shall be brought to the immediate attention of the Architect/Engineer, Contractor, and Owner. A report that the corrected work has been inspected shall be sent to the Building Official, the Architect/Engineer, and the Owner.
3. The special inspector shall submit a final signed report stating whether the work requiring special inspection was, to the best of the inspector's knowledge, in conformance to the approved plans and specifications and the applicable workmanship provisions of the building code.

1.07 QUALIFICATIONS OF TESTING LABORATORY

A. The Testing Laboratory shall meet the basic requirements of ASTM E329 and shall submit to the Owner, Architect, and Engineer evidence of current accreditation from the American Association for Laboratory Accreditation, the AASHTO Accreditation Program or the "NIST" National Voluntary Laboratory Accreditation Program.

B. The Testing Laboratory shall be an Approved Agency by the Building Official of the city wherein the project is located to perform Special Inspections and other tests and inspections as outlined in the applicable building code.

C. Tests and inspections shall be conducted in accordance with specified requirements, and if not specified, in accordance with the applicable standards of the American Society for Testing and Materials or other recognized and accepted authorities in the field.

D. Qualifications of Welding Inspectors

1. Inspectors performing visual weld inspection shall meet the requirements of AWS D1.1 Section 6.1.4. Welding inspection shall be supervised and the inspection reports signed by an inspector with current certification as an AWS Certified Welding Inspector (CWI)
2. Inspectors performing nondestructive examinations of welds other than visual inspection (MT, PT, UT, RT) shall meet the requirements of AWS D1.1, Section 6.14.6.

E. Qualifications for Post-Tensioning Inspector - The technician for the Owner's Testing Laboratory performing the field inspections required for post-tensioned concrete shall possess a currently valid Level

2 Post-Tensioning Inspector Certification issued by the Post-Tensioning Institute. A copy of such certification for each such technician shall be submitted for Engineer review and approval.

1.08 AUTHORITIES AND DUTIES OF THE LABORATORY

A. The Owner's Testing Laboratory shall receive from the Owner and review the project plans and specifications with the Architect and Engineer immediately upon receipt and prior to the start of construction. The Laboratory may attend preconstruction conferences with the Architect, Engineer, Project Manager, Contractor, and Material Suppliers as required to coordinate materials inspection and testing requirements with the planned construction schedule and shall participate in such conferences throughout the course of the project.

B. Cost Proposal: The Testing Laboratory's proposal to the Owner shall contain unit price stipulations for specified tests and inspections and on an hourly basis for personnel. A total estimated price shall also be submitted.

C. Cooperation with Design Team: The Laboratory shall cooperate with the Architect, Engineer, and Contractor and provide qualified personnel promptly on notice.

D. The Laboratory shall perform the required inspections, sampling, and testing of materials as specified under each section and observe methods of construction for compliance with the requirements of the Contract Documents and the applicable building code.

E. Inspections Required by Government Agencies: The Testing Laboratory shall perform inspections and submit reports and certifications as required by government agencies having jurisdiction over the aspects of the project covered by this specification.

F. Notification of Deficiencies in the Work: The Laboratory shall notify the Architect, Engineer, and Contractor within 24 hours of discovery by telephone or e-mail, and then in writing of observed irregularities and deficiencies of the work and other conditions not in compliance with the requirements of the Contract Documents.

G. Reports:

1. Information on Reports: The Laboratory shall submit copies of reports of inspections and tests promptly and directly to the parties named below. The reports shall contain at least the following information:
    a. Project Name
    b. Date report issued
    c. Testing Laboratory name and address
    d. Name and signature of inspector
    e. Date of inspection and sampling
    f. Date of test
    g. Identification of product and Specification section
    h. Location in the project
    i. Identification of inspection or test
    j. Record of weather conditions and temperature (if applicable)
    k. Results of test regarding compliance with Contract Documents
2. Copies: The Laboratory shall send signed copies of test and inspection reports to the following parties:
    a. 2 copies to the Owner or his representative
    b. 2 copies to the Contractor
    c. 1 copy to the Architect
    d. 1 copy to the Engineer of responsibility
3. Certification: Upon completion of the job, the Laboratory shall furnish to the Owner, Architect, and Engineer of Record, a statement signed by a licensed professional engineer that, to the best of their knowledge, required tests and inspections were made in accordance with the requirements of the Contract Documents.

H. Accounting: The Testing Laboratory shall be responsible for separating and billing costs attributed to the Owner and costs attributed to the Contractor.

I. Monitoring Product and Material Certifications: The Testing Laboratory shall be responsible for monitoring the submittals of product and material certifications from manufacturers and suppliers as specified in the Specifications and shall report to the Owner, Architect, and Engineer when those submittals are not made in a timely manner.

J. Limitations of Authority: The Testing Laboratory is not authorized to revoke, alter, relax, enlarge upon, or release any requirements of the Specifications or to approve or accept any portion of the work or to perform any duties of the Contractor and his Subcontractors.

1.09 CONTRACTOR'S RESPONSIBILITY

A. Cooperation with Design Team: The Contractor shall cooperate with laboratory personnel, provide access to the work, and to manufacturer's operations.

B. Furnishing Samples and Certificates: The Contractor shall provide to the laboratory certificates and representative samples of materials proposed for use in the work in quantities sufficient for accurate testing as specified.

C. Furnishing Casual Labor, Equipment and Facilities: The Contractor shall furnish casual labor, equipment, and facilities as required for sampling and testing by the laboratory and otherwise facilitate the required inspections and tests.

D. Advance Notice: The Contractor shall be responsible for notifying the Testing Laboratory sufficiently in advance of operations to allow for assignment of personnel and scheduling of tests. Failure to sufficiently notify may result in additional costs incurred by the Testing Laboratory that may be back-charged to the Contractor by the Owner.

E. Payment for Substitution Testing: The Contractor shall arrange for and pay for any additional samples and tests above those required by the Contract Documents as requested by the Contractor for his convenience in performing the work.

F. Payment for Retesting: The Contractor shall be liable to the Owner for the cost for any additional inspections, sampling, testing, and retesting done by the Owner’s Testing Laboratory as required when initial tests indicate work does not comply with the requirements of the Contract Documents.

G. Payment by Contractor: The Contractor shall furnish and pay for the following items if required:

1. Soil survey of the location of borrow soil materials, samples of existing soil materials, and delivery to the Contractor’s Testing Laboratory.
2. Samples of concrete aggregates and delivery to the Contractor’s Testing Laboratory.
3. Concrete mix designs as prepared by his concrete supplier.
4. Site-situated storage boxes for concrete cylinders
5. Concrete coring, tests of below strength concrete, and load tests, if ordered by the Owner, Architect, or Engineer.
6. Certification of reinforcing steel and prestressing steel mill order.
7. Certification of structural steel mill order.
8. Certification of portland cement, lime, fly ash.
9. Certification of welders and preparation of Welding Procedure Specifications.
10. Tests, samples, and mock-ups of substitute material where the substitution is requested by the Contractor and the tests are necessary in the opinion of the Owner, Architect or Engineer to establish equality with specified items.
11. The making and testing of concrete cylinders for the purpose of evaluating strength at time of form stripping or for post-tensioning or the time spent evaluating the in situ strength of concrete using the Maturity Method.
12. Any other tests when such costs are required by the Contract Documents to be paid by the Contractor.

H. Notification of Source Change: The Contractor shall be responsible for notifying the Owner, Architect, Engineer, and Owner’s Testing Laboratory when the source of any material is changed after the original tests or inspections have been made.

I. Tests for Suspected Deficient Work: If in the opinion of the Owner, Architect, or Engineer any of the work of the Contractor is not satisfactory, the Contractor shall furnish and pay for all tests that the Owner, Architect, or Engineer deem advisable to determine its proper construction. The Owner shall pay all costs if the tests prove the questioned work to be satisfactory.

1.10 PAYMENT OF TESTING LABORATORY

A. The Owner will pay for the initial Laboratory services for testing of materials for compliance with the requirements of the Contract Documents. The Contractor will be liable to the Owner for the cost for testing and retesting of materials that do not comply with the requirements of the Contract Documents and shall furnish and pay for the testing and inspection of other items as specified in these Specifications.

PART 2 - PRODUCTS

NOT USED

PART 3 - EXECUTION

3.01 SCOPE OF WORK

A. The work to be performed by the Testing Laboratory shall be as specified in this Section of the Specification and as determined in meetings with the Owner, Architect, and Engineer.

3.02 EARTHWORK:

A. Compacted Fill Inspection and Testing:

1. Field Density Testing:

a. Paved Areas and Building Slab Subgrade:

1). Make at least one field density test of the natural subgrade for every 2500 square feet of paved area or building slab but in no case less than three tests.

2). In each compacted fill layer or lift, make one field density test for every 2500 square feet of building slab or paved area but in no case less than three tests.

b. Foundation Wall Backfill: Make at least one field density test for each 200 lineal feet of wall with a minimum of 4 tests for the basement walls around the perimeter of each building and a minimum of one test for every other type of foundation wall on the site. Tests shall be performed in random lifts along each wall.

c. Compacted Fill Beneath Column and Wall Footings and Mat Foundations: Make at least one field density test in each compacted fill layer or lift for each column footing, one for each twenty-five lineal feet of wall and one for each 2500 sq. ft of mat foundation area or fraction thereof.

2. Field Density Tests: Field Density Tests shall be run according to ASTM D2937, or ASTM D2922 as applicable.

3. Acceptance Criteria: The results of field density tests by the Laboratory will be considered satisfactory if the average of any three consecutive tests has a value not less than the required density with no single test falling more than 2 percent below the required density and the moisture content conforms to the requirements of the specification.

4. Additional Testing: If reports by the Laboratory indicate field densities lower than specified, additional tests will be run by the Laboratory with at least the frequencies scheduled above on recompacted fill and/or natural subgrade. The Testing Laboratory shall notify the Contractor on a timely basis for any required retesting so as not to delay the work. The costs of such tests shall be liable to the Owner for repayment by the Contractor.

B. Foundation Inspection by the Testing Laboratory:

1. Augercast Piles:

a. Grout Tests: Make and test one set of 6 2-inch cubes according to the requirements of ASTM C109. Each strength test shall be the average of two 28 day strengths. Test two cubes at 3 days, two at 7 days, and two cubes at 28 days. Make an additional set of three cubes and test them at 90 days if a special pozzolan is used in the grout mix. Make one set of cubes for each day's operation but not less than one set for each 25 cubic yards or one set for each pile cap.

2. Precast Concrete Piles:

a. Plant Inspection: Inspect forms, placement of reinforcing steel, and strands, placement and finishing of concrete, and tensioning of strands.

b. Concrete Cylinders: Make and test one set of four cylinders for each 100 cubic yards but not less than one set for each day's operation. Break one cylinder at 7 days and two at 28 days and one at 56 days.

3. Drilled Piers, Underreamed and Spread Footings:

a. Concrete Cylinders: Make and test concrete cylinders as specified for Cast-in-Place Concrete.

b. Reinforcing Steel: Inspect reinforcing steel for proper number and size of bars and confirm dowel or anchor bolt placement into top of pier.

4. Mat Footings

a. Concrete Cylinders: Make and test concrete cylinders as specified for Poured-in-Place Concrete.

b. Reinforcing Steel: Inspect reinforcing steel size, number of bars, and placement and confirm dowel or anchor bolt placement into footing.

c. Temperature Monitoring: Monitor the temperature of the concrete in the mat at different levels as it cures.

C. Foundation Inspection by the Geotechnical Engineer: The Geotechnical Engineer of Record shall provide inspection service for the following items before and during foundation installation as appropriate for the foundation type. The Geotechnical Engineer shall submit written field inspection reports promptly after inspection to the parties listed above and report his findings after each inspection by telephone or e-mail to the Engineer.

1. Spread (Excavated) and Mat Footing:

a. Subgrade: Verify that foundation bearing conditions are consistent with soil report tests and that the footing is being installed in the proper soil strata at the proper elevation. Make recommendations regarding adjustment to subgrade or bearing elevation if subgrade is not adequate to support footing.

2. Augercast Piles:

a. Dimensional Verification: Verify placement location, plumbness, diameter and length of piles.

b. Monitoring Grout Quantity: Record for each pile inspected quantity of grout placed compared to the actual quantity required. Report discrepancies to Engineer.

c. Continuously monitor the grouting operation to verify that the grout head is maintained at least 5 feet above the injection point.

d. Grout Level: Continuously monitor and record top of pile elevation as grout sets over a 24 hour period. Immediately report any drop in pile elevation to Engineer.

e. Report: For each pile installed, prepare and submit a report the lists the following information: pile location, pile number, pile diameter, actual tip elevation, actual top of grout elevation, pile length, theoretical volume of grout, actual volume of grout placed, reinforcing steel size and actual depth actually placed, drilling start and finish time, amount of drop of grout level in the first 24 hours after placing, and a list of any unusual occurrences that may affect pile performance. The report shall include the name of the project, the name of the piling contractor and the name of the drilling superintendent. The report shall be signed by a licensed engineer in the state where the project is located.

3. Precast Concrete Piles:

a. Blow Counts: Record blow count per foot of penetration for each pile. Report any discrepancies to Engineer.

b. Splices: Inspect 100% of piles splices for proper type and installation.

c. Report: For each pile installed, prepare and submit a report that lists the following information: pile location and number, computed pile capacity, type and size of hammer used, type of pile-driving cap used, rate of operation of pile driving equipment, pile size or dimensions, elevation of point, elevation of butt before and after cut-off, ground elevation, continuous record of number of blows for each foot of penetration, splice type and locations along length of pile, any pile deviation from specified tolerances, evidence and measurement of pile heave (if any), evidence of pile relaxation (drop-off in pile capacity with time), evidence of soil freeze (increase in pile capacity with time), retap data if a pile is driven further after initial installation, any unusual occurrences during pile driving and state whether or not the pile is capable of supporting the specified design load. The report shall state the recommended course of action for any damaged or mis-driven piles. The report shall include the name of the project, the name of the piling contractor and the name of the field superintendent. The report shall be signed by a licensed engineer in the state where the project is located.

4. Drilled Piers and Underreamed Footings:

a. Bearing Elevation: Observe that piers are founded in proper bearing strata as defined in the Geotechnical Report and that bottom of hole is clean and properly formed. Recommend appropriate action if specified bearing elevation does not provide proper strength.

b. Bell and Shaft Sizes: Verify that the shaft and bell diameters are within specified tolerances.

c. Shaft Stability: Observe the shaft sides as drilling proceeds and recommend appropriate

action if sloughing becomes excessive.

d. Concrete Quantities: Record quantity of concrete placed in each pier and compare against theoretical quantity required. Report discrepancies to Engineer.

e. Placement Method: Observe that piers are placed by approved methods as defined in the Geotechnical Report and in the specifications. Confirm that casings are being used as recommended in the Geotechnical Report. Confirm that concrete is not being contaminated by soil encroachment into pier.

f. Report: For each drilled shaft installed, prepare and submit a report indicating the following information: pier number and location, pier shaft diameter, pier underream diameter (if applicable), bottom elevation, top elevation, pier length, theoretical volume of concrete in pier, estimate of actual volume of concrete placed, reinforcing steel size and depth actually placed, drilling start and finish time, concreting start and finish time, variation from specified tolerances including surveyed location and plumbness, construction method (dry method, casing method, or slurry displacement method), groundwater conditions (rate of water infiltration and depth of water in hole prior to concreting for dry piers; water elevation in hole for wet piers), elevation of top and bottom of any casing left in place, description of temporary or permanent casing (including purpose, diameter, wall thickness and length), description and elevation of any obstructions encountered and whether removal was obtained, description of pier bottom including amount and extent of loose material, method of concrete placement, any difficulties encountered in drilling or concreting operations, and any deviations from specifications. The report shall include the name of the project, the name of the drilling contractor and the name of the field superintendent. The report shall be signed by a licensed engineer in the state where the project is located.

D. Pile Load Test: The Geotechnical Engineer shall supervise a pile load test(s) as specified on the drawings according to ASTM D1143-74. He shall submit a written report of his findings to the parties listed above and report by telephone or e-mail to the Engineer, the results of the pile load tests. Refer to the Pile Specification for additional requirements of the test.

3.03 REINFORCING STEEL

A. If reinforcing steel is purchased direct from a United States Mill, Manufacturer’s test sheets will be sufficient. Steel supplier shall furnish mill certificate reports.

B. If steel is from an undetermined origin or manufacturer’s test sheets or mill certificate reports are unavailable, perform tension and bending tests on three separate samples of each size of bar for every five tons of each type of steel as specified in the appropriate ASTM Specifications. Contractor shall furnish all material for testing and pay for all such tests.

C. Mechanical Tension Splices: The Owner’s Testing Laboratory shall provide 100% visual inspection of mechanical tension splices on the project. Inspection shall verify compliance with specifications and conformance with the manufacturer’s recommendations for installation after consulting with the manufacturer, who is to be present for the first installation of the splice on the project. The Laboratory shall additionally conduct monotonic tension tests in accordance with ASTM A1034 of mechanical tension splices of the type as specified on the structural drawings. It is not necessary that the specimens to be tested are production splices, however, the specimens to be tested shall have been made by the Contractor's personnel under field conditions. The rate of testing shall be as follows:

1. Two specimens for the first 50 splices (or fraction thereof for small jobs) at the beginning of the job. Splices not meeting tension requirements shall be retested at Contractor's expense until all splices meet the tension requirements.

2. One specimen for every 100 (or fraction thereof) additional splices occurring on the job. Any splices not meeting tension requirements shall be retested at Contractors expense until all splices have passed the test.

3. A minimum of one test specimen shall also be selected from transition splices (splices of one bar size to another bar size), if any.

B. Compression Butt Splices: The Owner’s Testing Laboratory shall provide 100% visual inspection of compression butt splices on the job. Inspection shall verify splice conformance with the requirements for end bearing splices as set forth in ACI 318 Building Code Requirements for Reinforced Concrete as well as the manufacturer’s instructions.

C. Reinforcing Steel Field Inspection: The Owner’s Testing Laboratory or designated Special Inspector shall inspect 100 % of reinforcement before each concrete pour to verify the information noted below. Inspection reports shall be prepared and distributed in accordance with the local building code and as specified in this specification.

1. Primary and secondary, longitudinal reinforcement has correct size and number in proper layers.

2. Longitudinal reinforcement has correct length and lap.
3. Ties and stirrups are of correct size, spacing, and number and have the proper termination-hook geometry.
4. Unscheduled face reinforcement in beams are provided and are of correct size, number and spacing and have the proper end terminations.
5. Proper hooks are provided at bar ends as detailed.
6. Reinforcement is properly supported and braced to formwork to prevent movement during concreting operation.
7. Reinforcement has proper cover.
8. Sufficient spacing between reinforcement for concrete placement.
9. Dowel reinforcement is of proper size, at proper spacing, and has proper lap length and embedment length.
10. Welded wire reinforcement is composed of flat sheets, has proper wire gage and spacing, is properly supported, and is properly lapped with a length of one square plus two inches.
11. Proper Construction/Control/Expansion joint spacing and reinforcement.
12. Reinforcement around embedded items is erected according to details.
13. Welded reinforcement has been done according to AWS requirements. Review the Welding Procedure Specification (WPS) submitted by the contractor for any reinforcing steel other than ASTM A 706 that is proposed to be welded for consistency with acceptable welding practices and the AWS.
14. Proper installation of flat-slab shear-head reinforcement

D. Welded Reinforcing: Continuous inspection of the welding of reinforcing bars to ensure compliance with the requirements of AWS shall be done for the following items:
1. Reinforcing steel resisting flexural and axial forces.
2. Boundary elements of reinforced concrete walls.
3. Shear reinforcement.

3.04 CONCRETE CONTROL AND TESTING

A. Secure composite samples in accordance with ASTM C172. Each sample shall be obtained from a different batch of concrete on a random basis, avoiding any selection of the test batch other than by a number selected at random before commencement of concrete placement.

B. Specimens for pumped concrete shall be taken at the discharge end of pumping equipment.

C. Any deviations from the requirements of ASTM Specifications shall be recorded in the test report. Test concrete specimens in accordance with ASTM C39.

D. Concrete Test Cylinders:
1. Cylinder Molding and Testing: Cylinders for strength tests shall be molded and Laboratory cured in accordance with ASTM C31 and tested in accordance with ASTM C39. Cylinders may be either 6” in diameter by 12” or 4” in diameter by 8”, however, the diameter of the cylinder shall be at least three times the nominal maximum size of the coarse aggregate in the mix tested. All of the cylinders for each class of concrete shall be of the same dimension for all sets of that class.
2. Frequency of Testing: Each set of test cylinders shall consist of a minimum of four standard test cylinders. A set of test cylinders shall be made according to the following minimum frequency guidelines:
a. One set for each class of concrete taken not less than once a day.
b. Mat Foundation: One set for each 250 cubic yards or fraction thereof.
c. Piers, Piles, Underreamed Footings: One set for each 100 cubic yards or fraction thereof.
d. Pressure-Injected Footings: One set for each 50 cubic yards or fraction thereof.
e. Spread Footings: One set for each 100 cubic yards or fraction thereof.
f. Pile Caps: One set for each 50 cubic yards or fraction thereof.
g. Basement Walls: One set for each 150 cubic yards.
h. Floors: One set for each 150 cubic yards or fraction thereof but not less than one set for each 5000 square foot of floor area.
i. Columns: One set for each 100 cubic yards or fraction thereof with a minimum of 2 sets per floor.

j. Shear Walls: One set for each 50 cubic yards but not less than 2 sets per floor.

k. Tilt-wall Panels: One set for every 100 cubic yards or fraction thereof.

l. All Other Concrete: A minimum of one set for each 150 cubic yards or fraction thereof.

m. No more than one set of cylinders at a time shall be made from any single truck.

n. If the total volume of concrete is such that the frequency of testing as specified above would provide less than five strength tests for a given class of concrete, tests shall be made from at least five randomly selected batches or from each batch if fewer than five batches are used.

o. The above frequencies assume that one batch plant will be used for each pour. If more than one batch plant is used, the frequencies cited above shall apply for each plant used.

3. The cylinders shall be numbered, dated, and the point of concrete placement in the building recorded.

4. Standards for Tests of Concrete:

a. Slump Tests: Slump Tests (ASTM C143) shall be made at the beginning of concrete placement for each batch plant and for each set of test cylinders made. The slump test shall be made from concrete taken from the end of the concrete truck chute. The concrete shall be considered acceptable if the slump is within plus or minus 1 inch of the slump noted on the mix design submittal form for that class of concrete.

b. Air Entrainment: Air entrainment tests (ASTM C231 or C173, C173 only for lightweight concrete) shall be made at the same time slump tests are made as cited above.

c. Concrete Temperature: Concrete temperature at placement shall be measured (ASTM C1064) at the same time slump tests are made as cited above.

d. Unit Weight Test: ASTM C138

E. Inspect each batch of concrete, monitor addition of mixing water to assure uniform consistency from truck to truck. Check mixing from mixers before mix begins to set and within time limits set forth in ASTM C94.

1. Monitor addition of water to concrete at job site and length of time concrete is allowed to remain in truck during placement.

2. Certify each delivery ticket indicating class of concrete delivered, amount of water added and time at which cement and aggregate was discharged into truck, and time at which concrete was discharged from truck.

F. Should the strength of concrete fall below the minimum, then additional tests, including load tests, may be required. These tests, if required, shall be made at the Contractor's expense and shall be in accordance with ASTM C42 and ACI 318. If tests do not meet the applicable requirements, then the structure, or any part of the structure, shall be removed and replaced at the Contractor's expense.

G. Test reports shall include but not be limited to the following information: Date of concrete placement, concrete mix identification number or proportions of ingredients, truck ticket number, time test was made, time of batching, location of each placement, slump, unit weight and air content of concrete sampled and date and results of strength test.

H. Report promptly to Architect all details of reasons for rejection of any and all quantities of concrete. Give all information concerning locations of the concrete pours, quantities, date of pours, and other pertinent facts concerning concrete represented by the specimens.

I. Any concrete testing requested by the Contractor for early formwork or shoring removal, etc., shall be at the Contractor's expense.

J. Furnish a statistical analysis for each class of concrete placed on the project in accordance with ACI 214-77 and ACI 318. Information shall be updated and distributed once a month as directed by the Architect. Information shall include, but not be limited to, the following:

1. Strength tests at 7 days of 2 cylinder averages.

2. Strength tests at 28 days of 2 cylinder averages.

3. 28-day moving average strength tests of last 3 test groups.

4. Standard deviation and coefficient of variation based on 28 day strength tests.

5. Average strength and number of 28 day tests for most recent month.

K. Rejection of Concrete: The Contractor shall reject concrete delivered to the site for any of the following reasons:

1. Wrong class of concrete (incorrect mix design number).
2. Environmental Conditions: Environmental condition limits shall be as follows unless appropriate provisions in concreting practices have been made for cold or hot weather:
    a. Cold Weather: Air temperature must be 40°F and rising or the average daily temperature cannot have been lower than 40°F for 3 consecutive days unless the temperature rose above 50°F for at least one-half of any of those 24 hour periods.
    b. Hot Weather: Environmental conditions must be such that cause an evaporation rate from the concrete surface of 0.2 lb./sq. ft./hr. or less as determined by Figure 2.1.5 in ACI 305R-91. Concrete may be placed at other environmental condition ranges only with approval of the job inspector for the Owner's Testing Laboratory or other duly appointed representative.
3. Concrete with temperatures exceeding 95°F shall not be placed in the structure.
4. Air contents outside the limits specified in the mix designs.
5. Slumps outside the limits specified.
6. Excessive Age: Concrete shall be discharged within 90 minutes of plant departure or before it begins to set if sooner than 90 minutes unless approved by the Laboratory job inspector or other duly appointed representative.

L. Concrete Batch Trip Tickets: Concrete batch trip tickets shall be collected and retained by the Contractor. Compressive strength, slump, air, and temperature tests shall be identified by reference to a particular trip ticket. Tickets shall contain the information specified in ASTM C94. Each ticket shall also show the amount of water that may be added in the field for the entire batch that will not exceed the specified water cement ratio for the design mix. The Contractor and Owner's Testing Laboratory shall immediately notify the Architect/Engineer and each other of tickets not meeting the criteria specified.

3.05 MORTAR OR GROUT

A. For every other day of grout placed, strength shall be tested with a set of cubes as follows:
1. A set of cubes shall consist of three cubes to be tested at 7 days, and three cubes to be tested at 28 days.
2. Test cubes shall be made and tested in accordance with ASTM C109, with the exception that the grout should be restrained from expansion by a top plate.

3.06 STRUCTURAL STEEL

A. Contractor shall provide the Testing Laboratory with names of welder to be employed on work, during fabrication and erection, together with certification that each of these welders has passed qualifications tests within the last year, unless noted otherwise, in accordance with AWS Standards.

B. Inspect all structural steel during and after erection for conformance with Contract Documents and Shop Drawings. Any cases of insufficient bracing or guying, or other unsafe conditions shall be immediately called to attention of Contractor and reported to Architect.
1. No burning or other field correction of steel members is permitted without express permission of Owner's representative. Immediately report violations.
2. Shop Inspection:
    a. Review Shop Drawings and shop procedures with Fabricator's supervisory personnel.
    b. Request and obtain necessary mill certification of steel and verify proper material throughout the duration of the job, as required.
    c. Review welding procedures and welder operator qualifications for conformance to the technical requirements of the specifications.
    d. Check layout and dimensions of jigs and fixtures for multiple fabrications, joint preparation, fit-up, and runout plates.
    e. Verify welding electrodes to be used and other welding consumables as job progresses.
    f. Check preheating procedure for uniformly and thoroughness through the full thickness of material.
    g. Make visual inspection of welding in progress for size, length and quality.
    h. Check bolted connections as required by the technical requirements of the specifications.
    i. Perform random dimensional checks of completed members.
    j. Provide inspection of surface preparation for coating and coating operations.
3. Field inspection:

a. Obtain planned erection procedure, and review with Erector's supervisory personnel.

b. Check installation of anchor bolts and base plates.

c. Verify field welding procedures and welder qualifications to assure conformance with the specifications.

d. Check steel as received in field for possible shipping damage, workmanship and piece marking.

e. Check plumbness, alignment and camber as erection progresses including proper bracing.

f. Check joint preparation, fit-up, backing strips and runout plates.

g. Check preheating to assure proper temperature, uniformity, and thoroughness through the full material thickness.

h. Review welding sequence.

i. Visually inspect field welding for size, length, and quality.

4. Inspection of High-Strength Bolted Construction shall be in accordance with the latest edition of AISC Specification for Structural Joints, and as follows:

a. All high-strength bolted connections shall be visually inspected.

b. At least two bolts of every third connection between floor beams and girders shall be checked with a calibrated torque wrench for proper torque.

c. At least two bolts of every third connection between girders and columns shall be checked as above.

d. All bolts in every connection in the primary exterior framing and braced framing shall be checked as above.

e. All bolted connections that fail shall be corrected and all bolts in the connection shall be retested.

f. Check calibration of impact wrenches at least twice daily.

5. Inspection of all welds shall be in accordance with the latest edition of the AWS Structural Welding Code.

a. Visually inspect all welds in accordance with AWS D1.1.

b. All penetration column to base plate welds shall be inspected by ultrasonic testing in accordance with ASTM E-164.

c. All full penetration welds in moment connections shall be inspected by ultrasonic testing.

6. Inspection of headed stud connector welding shall be in accordance with the latest edition of the AWS Structural Welding Code and as follows:

a. Visual inspection of all studs shall indicate complete fusion and weld flush or fillet for 100 percent circumference. There will be no indication of lack of infusion or undercut weld.

b. A minimum of two (2) shear studs shall be welded at the start of each production period in order to determine proper generator, control unit and stud welder setting. These studs shall be capable of being bent 45 degrees from vertical without weld failure. If, after welding, visual inspection reveals that a sound weld or a full 360 degree fillet has not been obtained for a particular stud, such stud shall be struck with a hammer and bent 15 degrees off perpendicular to the nearest end of the beam. Studs failing under this test shall be replaced.

3.07 STEEL JOISTS AND JOIST GIRDERS

A. Testing Laboratory shall inspect the shop fabrication and the field fabrication and erection at all times during the process of the Work. The Testing Laboratory shall inspect all connections of both bolted and welded types.

B. Testing Laboratory shall inspect the erection of steel joists and joist girders for proper installation. This inspection shall include checking for proper bearing, welding, bolting, and installation of bridging.

3.08 METAL DECK

A. Testing Laboratory shall perform field inspection of metal deck for proper type, gage, finish, installation and attachment. Testing Laboratory shall provide a written report of their inspection.

3.09 MASONRY

A. Verification Testing Frequency: Verification of masonry strength (f'm) will be performed at the beginning of masonry construction and during construction for each 5000 square feet of wall area or portion thereof.

B. Concrete Masonry Unit: For each type of concrete masonry unit indicated, verify compliance with ASTM C90 and the strength required by design. Verification may be by reviewing certification from unit producer showing compliance.

C. Mortar:

1. Throughout construction, verify the proportions of the site-prepared mortar mix comply with the requirements of ASTM C270 for the type specified.

2. Verify the proportions of materials in premixed or preblended mortar comply with the requirements of ASTM C270 for the type specified as delivered to the site.

D. Grout:

1. Prior to grouting, verify the proportions of site-prepared grout mix comply with the requirements of ASTM C476 for each type of grout used.

2. Verify the proportions of materials in premixed or preblended grout comply with the requirements of ASTM C476 as delivered to the site.

E. Prism Test Method:

1. Compression Test: For each type of wall construction indicated for testing, test representative masonry prisms by methods of sampling and testing of ASTM C1314, and as follows:

a. Prepare one set of prisms for testing at 7 days and one set for testing at 28 days.

b. For concrete masonry prisms adhere to requirements as specified under preconstruction testing. Build prisms on job using same materials and methods as for wall construction. Store prisms in air at temperature not less than 65°F in a facility supplied by the contractor where they will be undisturbed for seven (7) days. After seven (7) days, transport to laboratory in a manner which will not disturb mortar bond. c. Cap each prism with suitable material to provide bearing surfaces on each end.

1). Plane within 0.003 inch.

2). Approximately perpendicular to the axis of the prism.

d. The preparation of prisms shall be observed by the testing agency that will test the prisms.

2. Report test results in writing and in form specified under each test method, to Architect and Contractor, on same day tests are made.

3. Retests: Where prism tests indicate non-compliance with specified requirements, additional testing shall be performed at the frequency of two additional tests for each unsatisfactory test. The cost of such additional testing shall be the responsibility of the Contractor. Where retesting fails to indicate conformance with specified requirements, any masonry construction represented by unsatisfactory tests shall be removed and replaced with acceptable masonry construction.

END OF SECTION

PART 1 - GENERAL

1.01 RELATED DOCUMENTS

A. Drawings and general provisions of the Contract, including General and Supplementary Conditions and other Division 01 Specification Sections, apply to this Section.

1.02 SUMMARY

A. Section includes requirements for temporary utilities, support facilities, and security and protection facilities.

B. Related Section:

1. Section 01 11 00 – Summary of Work for limitations on work restrictions and utility interruptions.

1.03 USE CHARGES

A. General: Installation and removal of and use charges for temporary facilities shall be included in the Contract Sum unless otherwise indicated. Allow other entities to use temporary services and facilities without cost, including, but not limited to, Architect, testing agencies, and authorities having jurisdiction.

B. Water and Sewer Service from Existing System: Water from Owner's existing water system is available for use without metering and without payment of use charges. Provide connections and extensions of services as required for construction operations.

C. Electric Power Service from Existing System: Electric power from Owner's existing system is available for use without metering and without payment of use charges. Provide connections and extensions of services as required for construction operations.

1.04 INFORMATIONAL SUBMITTALS

A. Site Plan: Show temporary facilities, utility hookups, staging areas, and parking areas for construction personnel.

B. Fire-Safety Program: Show compliance with requirements of NFPA 241 and authorities having jurisdiction. Indicate Contractor personnel responsible for management of fire-prevention program.

C. Moisture-Protection Plan: Describe procedures and controls for protecting materials and construction from water absorption and damage.

1. Describe delivery, handling, and storage provisions for materials subject to water absorption or water damage.
2. Indicate procedures for discarding water-damaged materials, protocols for mitigating water intrusion into completed Work, and replacing water-damaged Work.
3. Indicate sequencing of work that requires water, such as sprayed fire-resistive materials, plastering, and terrazzo grinding, and describe plans for dealing with water from these operations. Show procedures for verifying that wet construction has dried sufficiently to permit

D. Dust- and HVAC-Control Plan: Submit coordination drawing and narrative that indicates the dust- and HVAC-control measures proposed for use, proposed locations, and proposed time frame for their operation. Identify further options if proposed measures are later determined to be inadequate. Include the following:

1. Locations of dust-control partitions at each phase of work.
2. HVAC system isolation schematic drawing.
3. Location of proposed air-filtration system discharge.
4. Waste handling procedures.
5. Other dust-control measures installation of finish materials.

1.05 QUALITY ASSURANCE

A. Electric Service: Comply with NECA, NEMA, and UL standards and regulations for temporary electric service. Install service to comply with NFPA 70.

B. Tests and Inspections: Arrange for authorities having jurisdiction to test and inspect each temporary utility before use. Obtain required certifications and permits.

C. Accessible Temporary Egress: Comply with applicable provisions in the U.S. Architectural & Transportation Barriers Compliance Board's ADA-ABA Accessibility Guidelines and ICC/ANSI A117.1.

1.06 PROJECT CONDITIONS

A. Temporary Use of Permanent Facilities: Engage installer of each permanent service to assume responsibility for operation, maintenance, and protection of each permanent service during its use as a construction facility before Owner's acceptance, regardless of previously assigned responsibilities.

PART 2 - PRODUCTS

2.01 MATERIALS

A. Chain-Link Fencing: Minimum 2-inch (50-mm), 0.148-inch (3.8-mm-) thick, galvanized steel, chain-link fabric fencing; minimum 6 feet (1.8 m) high with galvanized steel pipe posts; minimum 2-3/8-inch- (60-mm-) OD line posts and 2-7/8-inch- (73-mm-) OD corner and pull posts with 1-5/8-inch- (42-mm-) OD top rails.

B. Portable Chain-Link Fencing: Minimum 2-inch (50-mm), 0.148-inch- (3.8-mm-) thick, galvanized-steel, chain-link fabric fencing; minimum 6 feet (1.8 m) high with galvanized-steel pipe posts; minimum 2-3/8-inch- (60-mm-) OD line posts and 2-7/8-inch- (73-mm-) OD corner and pull posts, with 1-5/8-inch- (42-mm-) OD top and bottom rails. Provide galvanized-steel bases for supporting posts.

C. Wood Enclosure Fence: Plywood, [6 feet (1.8 m)] [8 feet (2.4 m)] high, framed with four 2-by-4-inch (50-by-100-mm) rails, with preservative-treated wood posts spaced not more than 8 feet (2.4 m) apart.

D. Dust-Control Adhesive-Surface Walk-off Mats: Provide mats minimum 36 by 60 inches (914 by 1624 mm).

E. Insulation for insulated temporary enclosures and partitions: Unfaced mineral-fiber blanket, manufactured from glass, slag wool, or rock wool; with maximum flame-spread and smoke-developed indexes of 25 and 50, respectively.

2.02 TEMPORARY FACILITIES

A. Field Offices, General: Prefabricated or mobile units with serviceable finishes, temperature controls, and foundations adequate for normal loading.

B. Common-Use Field Office: Of sufficient size to accommodate needs of Owner, Architect, and construction personnel office activities and to accommodate Project meetings specified in other Division 01 Sections. Keep office clean and orderly. Furnish and equip offices as follows:

1. Furniture required for Project-site documents including file cabinets, plan tables, plan racks, and bookcases.
2. Conference room of sufficient size to accommodate meetings of 6 individuals. Provide electrical power service and 120-V ac duplex receptacles, with no fewer than one receptacle on each wall. Furnish room with conference table, chairs, and 4-foot- (1.2-m) square tack and marker boards.
3. Drinking water and private toilet.
4. Heating and cooling equipment necessary to maintain a uniform indoor temperature of 68 to 72 deg F (20 to 22 deg C).
5. Lighting fixtures capable of maintaining average illumination of 20 fc (215 lx) at desk height.

C. Storage and Fabrication Sheds: Provide sheds sized, furnished, and equipped to accommodate materials and equipment for construction operations.

1. Store combustible materials apart from building.

2.03 EQUIPMENT

A. Fire Extinguishers: Portable, UL rated; with class and extinguishing agent as required by locations and classes of fire exposures.

B. HVAC Equipment: Unless Owner authorizes use of permanent HVAC system, provide vented, self-contained, liquid-propane-gas or fuel-oil heaters with individual space thermostatic control.

1. Use of gasoline-burning space heaters, open-flame heaters, or salamander-type heating units is prohibited.
2. Heating Units: Listed and labeled for type of fuel being consumed, by a qualified testing agency acceptable to authorities having jurisdiction, and marked for intended location and application.
3. Permanent HVAC System: If Owner authorizes use of permanent HVAC system for temporary use during construction, provide filter with MERV of 8 at each return-air grille in system and remove at end of construction and clean HVAC system as required in Section 01 77 00 "Closeout Procedures".

C. Air-Filtration Units: Primary and secondary HEPA-filter-equipped portable units with four stage filtration. Provide single switch for emergency shutoff. Configure to run continuously.

PART 3 - EXECUTION

3.01 INSTALLATION, GENERAL

A. Locate facilities where they will serve Project adequately and result in minimum interference with performance of the Work. Relocate and modify facilities as required by progress of the Work.

1. Locate facilities to limit site disturbance as specified in Division 01 Section "Summary."

B. Provide each facility ready for use when needed to avoid delay. Do not remove until facilities are no longer needed or are replaced by authorized use of completed permanent facilities.

3.02 TEMPORARY UTILITY INSTALLATION

A. General: Install temporary service or connect to existing service.

1. Arrange with utility company, Owner, and existing users for time when service can be interrupted, if necessary, to make connections for temporary services.

B. Sewers and Drainage: Provide temporary utilities to remove effluent lawfully.

1. Connect temporary sewers to municipal system as directed by authorities having jurisdiction.

C. Water Service: Connect to Owner's existing water service facilities. Clean and maintain water service facilities in a condition acceptable to Owner. At Substantial Completion, restore these facilities to condition existing before initial use.

D. Isolation of Work Areas in Occupied Facilities: Prevent dust, fumes, and odors from entering occupied areas.

1. Prior to commencing work, isolate the HVAC system in area where work is to be performed according to coordination drawings.

a. Disconnect supply and return ductwork in work area from HVAC systems servicing occupied areas.

b. Maintain negative air pressure within work area using HEPA-equipped air-filtration units, starting with commencement of temporary partition construction, and continuing until removal of temporary partitions is complete.

2. Maintain dust partitions during the Work. Use vacuum collection attachments on dust-producing equipment. Isolate limited work within occupied areas using portable dust-containment devices.

3. Perform daily construction cleanup and final cleanup using approved, HEPA-filter-equipped vacuum equipment.

E. Sanitary Facilities: Provide temporary toilets, wash facilities, and drinking water for use of construction personnel. Comply with requirements of authorities having jurisdiction for type, number, location, operation, and maintenance of fixtures and facilities.

F. Heating and Cooling: Provide temporary heating and cooling required by construction activities for curing or drying of completed installations or for protecting installed construction from adverse effects of low temperatures or high humidity. Select equipment that will not have a harmful effect on completed installations or elements being installed.

G. Isolation of Work Areas in Occupied Facilities: Prevent dust, fumes, and odors from entering occupied areas.

1. Prior to commencing work, isolate the HVAC system in area where work is to be performed according to coordination drawings.

a. Disconnect supply and return ductwork in work area from HVAC systems servicing occupied areas.

b. Maintain negative air pressure within work area using HEPA-equipped air filtration units, starting with commencement of temporary partition construction, and continuing until removal of temporary partitions is complete.

2. Maintain dust partitions during the Work. Use vacuum collection attachments on dust producing equipment. Isolate limited work within occupied areas using portable dust containment devices.

3. Perform daily construction cleanup and final cleanup using approved, HEPA-filter equipped vacuum equipment.

H. Ventilation and Humidity Control: Provide temporary ventilation required by construction activities for curing or drying of completed installations or for protecting installed construction from adverse effects of high humidity. Select equipment that will not have a harmful effect on completed installations or elements being installed. Coordinate ventilation requirements to produce ambient condition required and minimize energy consumption.

I. Electric Power Service: Connect to Owner's existing electric power service. Maintain equipment in a condition acceptable to Owner.

J. Lighting: Provide temporary lighting with local switching that provides adequate illumination for construction operations, observations, inspections, and traffic conditions.

1. Install and operate temporary lighting that fulfills security and protection requirements without operating entire system.

K. Telephone Service: Provide temporary telephone service in common-use facilities for use by all construction personnel. Install telephone line(s) for each field office.

1. At each telephone, post a list of important telephone numbers.

a. Police and fire departments.

b. Ambulance service.

c. Contractor's home office.

d. Architect's office.

e. Engineers' offices.

f. Owner's office.

g. Principal subcontractors' field and home offices.

2. Provide superintendent with cellular telephone or portable two-way radio for use when away from field office.

3.03 SUPPORT FACILITIES INSTALLATION

A. General: Comply with the following:

1. Provide construction for temporary offices, shops, and sheds located within construction area or within 30 feet (9 m) of building lines that is noncombustible according to ASTM E 136. Comply with NFPA 241.

2. Maintain support facilities until Architect schedules Substantial Completion inspection. Remove before Substantial Completion. Personnel remaining after Substantial Completion will be permitted to use permanent facilities, under conditions acceptable to Owner.

B. Traffic Controls: Comply with requirements of authorities having jurisdiction.

1. Protect existing site improvements to remain including curbs, pavement, and utilities.

2. Maintain access for fire-fighting equipment and access to fire hydrants.

C. Parking: Provide temporary parking areas for construction personnel in accordance with the Owner.

D. Dewatering Facilities and Drains: Comply with requirements of authorities having jurisdiction. Maintain Project site, excavations, and construction free of water.

1. Dispose of rainwater in a lawful manner that will not result in flooding Project or adjoining properties or endanger permanent Work or temporary facilities.

2. Remove snow and ice as required to minimize accumulations.

E. Project Signs: Provide Project signs as indicated. Unauthorized signs are not permitted.

1. Identification Signs: Provide Project identification signs as indicated on Drawings.

2. Temporary Signs: Provide other signs as indicated and as required.

a. Provide temporary, directional signs for construction personnel and visitors.

F. Waste Disposal Facilities: Provide waste-collection containers in sizes adequate to handle waste from construction operations. Comply with requirements of authorities having jurisdiction. Comply with Division 01 Section "Execution Requirements" for progress cleaning requirements.

G. Lifts and Hoists: Provide facilities necessary for hoisting materials and personnel.

1. Truck cranes and similar devices used for hoisting materials are considered "tools and equipment" and not temporary facilities.

H. Temporary Stairs: Until permanent stairs are available, provide temporary stairs where ladders are not adequate.

3.04 SECURITY AND PROTECTION FACILITIES INSTALLATION

A. Protection of Existing Facilities: Protect existing vegetation, equipment, structures, utilities, and other improvements at Project site and on adjacent properties, except those indicated to be removed or altered. Repair damage to existing facilities.

B. Environmental Protection: Provide protection, operate temporary facilities, and conduct construction as required to comply with environmental regulations and that minimize possible air, waterway, and subsoil contamination or pollution or other undesirable effects.

C. Tree and Plant Protection: Install temporary fencing located as indicated or outside the drip line of trees to protect vegetation from damage from construction operations. Protect tree root systems from damage, flooding, and erosion.

D. Barricades, Warning Signs, and Lights: Comply with requirements of authorities having jurisdiction for erecting structurally adequate barricades, including warning signs and lighting.

E. Temporary Enclosures: Provide temporary enclosures for protection of construction, in progress and completed, from exposure, foul weather, other construction operations, and similar activities. Provide temporary weathertight enclosure for building exterior.

1. Where heating or cooling is needed and permanent enclosure is not complete, insulate temporary enclosures.

F. Temporary Fire Protection: Install and maintain temporary fire-protection facilities of types needed to protect against reasonably predictable and controllable fire losses. Comply with NFPA 241.

1. Prohibit smoking in construction areas.

2. Supervise welding operations, combustion-type temporary heating units, and similar sources of fire ignition according to requirements of authorities having jurisdiction.

3. Develop and supervise an overall fire-prevention and -protection program for personnel at Project site. Review needs with local fire department and establish procedures to be followed. Instruct personnel in methods and procedures. Post warnings and information.

4. Provide temporary standpipes and hoses for fire protection. Hang hoses with a warning sign stating that hoses are for fire-protection purposes only and are not to be removed. Match hose size with outlet size and equip with suitable nozzles.

3.05 MOISTURE AND MOLD CONTROL

A. Contractor's Moisture Protection Plan: Avoid trapping water in finished work. Document visible signs of mold that may appear during construction.

B. Exposed Construction Phase: Before installation of weather barriers, when materials are subject to wetting and exposure and to airborne mold spores, protect as follows:

1. Protect porous materials from water damage.

2. Protect stored and installed material from flowing or standing water.

3. Keep porous and organic materials from coming into prolonged contact with concrete.

4. Remove standing water from decks.

5. Keep deck openings covered or dammed.

3.06 OPERATION, TERMINATION, AND REMOVAL

A. Supervision: Enforce strict discipline in use of temporary facilities. To minimize waste and abuse, limit availability of temporary facilities to essential and intended uses.

B. Maintenance: Maintain facilities in good operating condition until removal.

1. Maintain operation of temporary enclosures, heating, cooling, humidity control, ventilation, and similar facilities on a 24-hour basis where required to achieve indicated results and to avoid possibility of damage.

C. Temporary Facility Changeover: Do not change over from using temporary security and protection facilities to permanent facilities until Substantial Completion.

D. Termination and Removal: Remove each temporary facility when need for its service has ended, when it has been replaced by authorized use of a permanent facility, or no later than Substantial Completion. Complete or, if necessary, restore permanent construction that may have been delayed because of interference with temporary facility. Repair damaged Work, clean exposed surfaces, and replace construction that cannot be satisfactorily repaired.

1. Materials and facilities that constitute temporary facilities are property of Contractor. Owner reserves right to take possession of Project identification signs.

2. Remove temporary roads and paved areas not intended for or acceptable for integration into permanent construction. Where area is intended for landscape development, remove soil and aggregate fill that do not comply with requirements for fill or subsoil. Remove materials contaminated with road oil, asphalt and other petrochemical compounds, and other substances that might impair growth of plant materials or lawns. Repair or replace street paving, curbs, and sidewalks at temporary entrances, as required by authorities having jurisdiction.

3. At Substantial Completion, repair, renovate, and clean permanent facilities used during construction period. Comply with final cleaning requirements specified in Section 01 77 00 - Closeout Procedures.

END OF SECTION

PART 1 - GENERAL

1.01 RELATED DOCUMENTS

A. Drawings and general provisions of the Contract, including General and Supplementary Conditions and Division 01 Specification Sections, apply to this Section.

1.02 SECTION INCLUDES

A. Temporary Utilities: Electricity, lighting, heat, ventilation, and water.

1.03 RELATED REQUIREMENTS

A. Section 01 50 00 - Temporary Facilities and Controls:

1. Temporary telecommunications services for administrative purposes.
2. Temporary sanitary facilities required by law.

1.04 TEMPORARY ELECTRICITY

A. Cost: By Owner.

B. Provide power service required from owner's existing utility source.

C. Provide power outlets for construction operations, with branch wiring and distribution boxes located as required. Provide flexible power cords as required.

D. Provide main service disconnect and over-current protection at convenient location and meter.

E. Permanent convenience receptacles may be utilized during construction.

F. Provide adequate distribution equipment, wiring, and outlets to provide single phase branch circuits for power and lighting.

1.05 TEMPORARY LIGHTING FOR CONSTRUCTION PURPOSES

A. Provide and maintain incandescent lighting for construction operations to achieve a minimum lighting level of 2 watt/sq ft.

B. Provide and maintain 1 watt/sq ft lighting to exterior staging and storage areas after dark for security purposes.

C. Provide branch wiring from power source to distribution boxes with lighting conductors, pigtails, and lamps as required.

D. Maintain lighting and provide routine repairs.

1.06 TEMPORARY HEATING

A. Cost of Energy: By Contractor.

B. Provide heating devices and heat as needed to maintain specified conditions for construction operations.

C. Maintain minimum ambient temperature of 50 degrees F in areas where construction is in progress, unless indicated otherwise in specifications.

D. Existing facilities shall not be used.

1.07 TEMPORARY COOLING

A. Cost of Energy: By Contractor.

B. Provide cooling devices and cooling as needed to maintain specified conditions for construction operations.

C. Maintain maximum ambient temperature of 80 degrees F in areas where construction is in progress, unless indicated otherwise in specifications.

D. Existing facilities shall not be used.

1.07 TEMPORARY WATER SERVICE

A. Cost of Water Used: By Owner.

B. Connect to existing water source.

1. Exercise measures to conserve water.

PART 2 - PRODUCTS

NOT USED

PART 3 – EXECUTION

NOT USED

END OF SECTION

PART 1 - GENERAL

1.01 RELATED DOCUMENTS

A. Drawings and general provisions of the Contract, including General and Supplementary Conditions and Division 01 Specification Sections, apply to this Section.

1.02 SECTION INCLUDES

A. Access roads.

B. Parking.

C. Existing pavements and parking areas.

D. Permanent pavements and parking facilities.

E. Maintenance.

F. Removal, repair.

G. Mud from site vehicles.

PART 2 - PRODUCTS

2.01 MATERIALS

A. Temporary Construction: Contractor's option.

B. Materials for Permanent Construction: As specified in product specification sections, including earthwork, paving base, and topping.

2.02 SIGNS, SIGNALS, AND DEVICES

A. Traffic Cones and Drums, Flares and Lights: As approved by local jurisdictions.

B. Flag Person Equipment: As required by local jurisdictions.

PART 3 - EXECUTION

3.01 PREPARATION

A. Clear areas, provide surface and storm drainage of road, parking, area premises, and adjacent areas.

3.02 ACCESS ROADS

A. Use of designated existing on-site streets and driveways for construction traffic is permitted.

B. Tracked vehicles not allowed on paved areas.

C. Provide and maintain access to fire hydrants free of obstructions.

D. Coordinate with owner to provide access to onsite fire trucks.

3.03 PARKING

A. Use of designated areas of existing parking facilities by construction personnel is permitted.

B. Do not allow heavy vehicles or construction equipment in parking areas.

C. Arrange for temporary parking areas to accommodate use of construction personnel.

D. When site space is not adequate, provide additional off-site parking.

3.04 NEW PERMANENT PAVEMENTS

A. Prior to Substantial Completion the base for permanent roads and parking areas may be used for construction traffic.

B. Avoid traffic loading beyond paving design capacity. Tracked vehicles not allowed.

3.05 CONSTRUCTION PARKING CONTROL

A. Control vehicular parking to prevent interference with public traffic and parking, access by emergency vehicles, and Owner's operations.

B. Monitor parking of construction personnel's vehicles in existing facilities. Maintain vehicular access to and through parking areas.

C. Prevent parking on or adjacent to access roads or in non-designated areas.

3.06 FLAG PERSONS

A. Provide trained and equipped flag persons to regulate traffic when construction operations or traffic encroach on public traffic lanes.

3.07 HAUL ROUTES

A. Consult with authority having jurisdiction, establish public thoroughfares to be used for haul routes and site access.

B. Confine construction traffic to designated haul routes.

C. Provide traffic control at critical areas of haul routes to regulate traffic, to minimize interference with public traffic.

3.08 MAINTENANCE

A. Maintain traffic and parking areas in a sound condition free of excavated material, construction equipment, Products, mud, snow, and ice.

B. Maintain existing paved areas used for construction; promptly repair breaks, potholes, low areas, standing water, and other deficiencies, to maintain paving and drainage in original, or specified, condition.

3.09 REMOVAL, REPAIR

A. Remove underground work and compacted materials to a depth of 2 feet; fill and grade site as specified.

B. Repair existing facilities damaged by use, to original condition.

C. Repair damage caused by installation.

3.10 MUD FROM SITE VEHICLES

A. Provide means of removing mud from vehicle wheels before entering streets.

END OF SECTION

DIVISION 01 - GENERAL REQUIREMENTS

TEMPORARY EROSION AND SEDIMENT CONTROL SECTION 01 57 13

PART 1 - GENERAL

1.01 RELATED DOCUMENTS

A. Drawings and general provisions of the Contract, including General and Supplementary Conditions and other Division 01 Specification Sections, apply to this Section.

1.02 SECTION INCLUDES

A. Prevention of erosion due to construction activities.

B. Prevention of sedimentation of waterways, open drainage ways, and storm and sanitary sewers due to construction activities.

C. Restoration of areas eroded due to insufficient preventive measures.

D. Compensation of Owner for fines levied by authorities having jurisdiction due to non-compliance by Contractor.

1.03 RELATED REQUIREMENTS

A. Section 32 11 24 - Graded Crushed Agg Base Course for Flexible Pavement.

1.04 REFERENCE STANDARDS

(Current Edition at Date of Bid)

A. ASTM D4355 -Standard Test Method for Deterioration of Geotextiles by Exposure to Light, Moisture, and Heat in a Xenon Arc Type Apparatus.

B. ASTM D4491 -Standard Test Methods for Water Permeability of Geotextiles by Permittivity.

C. ASTM D4533 -Standard Test Method for Trapezoid Tearing Strength of Geotextiles.

D. ASTM D4632 -Standard Test Method for Grab Breaking Load and Elongation of Geotextiles.

E. ASTM D4751 -Standard Test Method for Determining Apparent Opening Size of a Geotextile.

F. ASTM D4873 -Standard Guide for Identification, Storage, and Handling of Geo synthetic Rolls and Samples.

1.05 PERFORMANCE REQUIREMENTS

A. Comply with requirements of State of Oklahoma Department of Environmental Quality.

B. Submit DEQ Form 606-002A, Notice of Intent for Storm water Discharges Associated with Construction Activity on Sites of One or More Acres. Develop, submit and follow Storm Water Pollution Plan as required by Oklahoma Department of Environmental Quality.

C. Do not begin clearing, grading, or other work involving disturbance of ground surface cover until applicable permits have been obtained; furnish all documentation required to obtain applicable permits.

1. Obtain and pay for permits and provide security required by authority having jurisdiction.

2. Owner will withhold payment to Contractor equivalent to all fines resulting from non-compliance with applicable regulations.

D. Timing: Put preventive measures in place as soon as possible after disturbance of surface cover and before precipitation occurs.

E. Storm Water Runoff: Control increased storm water runoff due to disturbance of surface cover due to construction activities for this project.

1. Prevent runoff into storm and sanitary sewer systems, including open drainage channels, in excess of actual capacity or amount allowed by authorities having jurisdiction, whichever is less.

2. Anticipate runoff volume due to the most extreme short term and 24-hour rainfall events that might occur in 25 years.

F. Erosion On Site: Minimize wind, water, and vehicular erosion of soil on project site due to construction activities for this project.

1. Control movement of sediment and soil from temporary stockpiles of soil.

2. Prevent development of ruts due to equipment and vehicular traffic.

3. If erosion occurs due to non-compliance with these requirements, restore eroded areas at no cost to Owner.

G. Erosion Off Site: Prevent erosion of soil and deposition of sediment on other properties caused by water leaving the project site due to construction activities for this project.

1. Prevent windblown soil from leaving the project site.
2. Prevent tracking of mud onto public roads outside site.
3. Prevent mud and sediment from flowing onto sidewalks and pavements.
4. If erosion occurs due to non-compliance with these requirements, restore eroded areas at no cost to Owner.

H. Sedimentation of Waterways On Site: Prevent sedimentation of waterways on the project site, including rivers, streams, lakes, ponds, open drainage ways, storm sewers, and sanitary sewers.
1. If sedimentation occurs, install or correct preventive measures immediately at no cost to Owner; remove deposited sediments; comply with requirements of authorities having jurisdiction.
2. If sediment basins are used as temporary preventive measures, pump dry and remove deposited sediment after each storm.

I. Sedimentation of Waterways Off Site: Prevent sedimentation of waterways off the project site, including rivers, streams, lakes, ponds, open drainage ways, storm sewers, and sanitary sewers.
1. If sedimentation occurs, install or correct preventive measures immediately at no cost to Owner; remove deposited sediments; comply with requirements of authorities having jurisdiction.

J. Open Water: Prevent standing water that could become stagnant.

K. Maintenance: Maintain temporary preventive measures until permanent measures have been established.

PART 2 - PRODUCTS

2.01 MATERIALS

A. Mulch: Use one of the following:
1. Straw or hay.
2. Wood waste, chips, or bark.
3. Erosion control matting or netting.

B. Grass Seed For Temporary Cover: Select a species appropriate to climate, planting season, and intended purpose. If same area will later be planted with permanent vegetation, do not use species known to be excessively competitive or prone to volunteer in subsequent seasons.

C. Bales: Air dry, rectangular straw bales.
1. Cross Section: 14 by 18 inches, minimum.
2. Bindings: Wire or string, around long dimension.

D. Bale Stakes: One of the following, minimum 3 feet long:
1. Steel U-or T-section, with minimum mass of 1.33 lb per linear foot.
2. Wood, 2 by 2 inches in cross section.

E. Silt Fence Fabric: Polypropylene geotextile resistant to common soil chemicals, mildew, and insects; non-biodegradable; in longest lengths possible; fabric including seams with the following minimum average roll lengths:
1. Average Opening Size: 30 U.S. Std. Sieve, maximum, when tested in accordance with ASTM D4751.
2. Permittivity: 0.05 sec^{-1}, minimum, when tested in accordance with ASTM D4491.
3. Ultraviolet Resistance: Retaining at least 70 percent of tensile strength, when tested in accordance with ASTM D4355 after 500 hours exposure.
4. Tensile Strength: 100 lb-f, minimum, in cross-machine direction; 124 lb-f, minimum, in machine direction; when tested in accordance with ASTM D4632.
5. Elongation: 15 to 30 percent, when tested in accordance with ASTM D4632.
6. Tear Strength: 55 lb-f, minimum, when tested in accordance with ASTM D4533.
7. Color: Manufacturer's standard, with embedment and fastener lines preprinted.

F. Silt Fence Posts: One of the following, minimum 5 feet long:
1. Steel U-or T-section, with minimum mass of 1.33 lb per linear foot.
2. Softwood, 4 by 4 inches in cross section.
3. Hardwood, 2 by 2 inches in cross section.

G. Gravel: See Section 32 11 24 for aggregate.

PART 3 - EXECUTION

3.01 EXAMINATION

A. Examine site and identify existing features that contribute to erosion resistance; maintain such existing features to greatest extent possible.

3.02 PREPARATION

A. Schedule work so that soil surfaces are left exposed for the minimum amount of time.

3.03 SCOPE OF PREVENTIVE MEASURES

A. In all cases, if permanent erosion resistant measures have been installed temporary preventive measures are not required.

B. Construction Entrances: Traffic-bearing aggregate surface.

1. Width: As required; 20 feet, minimum.
2. Length: 50 feet, minimum.
3. Provide at each construction entrance from public right-of-way.
4. Where necessary to prevent tracking of mud onto right-of-way, provide wheel washing area out of direct traffic lane, with drain into sediment trap or basin.

C. Linear Sediment Barriers: Made of silt fences.

1. Provide linear sediment barriers:
   a. Along downhill perimeter edge of disturbed areas, including soil stockpiles.
   b. Across the entrances to culverts that receive runoff from disturbed areas.
2. Space sediment barriers with the following maximum slope length upslope from barrier:
   a. Slope of Less Than 2 Percent: 100 feet.
   b. Slope Between 2 and 5 Percent: 75 feet.
   c. Slope Between 5 and 10 Percent: 50 feet.
   d. Slope Between 10 and 20 Percent: 25 feet.
   e. Slope Over 20 Percent: 15 feet.

D. Temporary Splash Pads: Stone aggregate over filter fabric; size to suit application; provide at downspout outlets and storm water outlets.

E. Soil Stockpiles: Protect using one of the following measures:

1. Cover with polyethylene film, secured by placing soil on outer edges.
2. Cover with mulch at least 4 inches thickness of pine needles, sawdust, bark, wood chips, or shredded leaves, or 6 inches of straw or hay.

F. Mulching: Use only for areas that may be subjected to erosion for less than 6 months.

1. Wood Waste: Use only on slopes 3:1 or flatter; no anchoring required.

G. Temporary Seeding: Use where temporary vegetated cover is required.

3.04 INSTALLATION

A. Traffic-Bearing Aggregate Surface:

1. Excavate minimum of 6 inches.
2. Place geotextile fabric full width and length, with minimum 12 inch overlap at joints.
3. Place and compact at least 6 inches of 1.5 to 3.5 inch diameter stone.

B. Silt Fences:

1. Store and handle fabric in accordance with ASTM D4873.
2. Where slope gradient is less than 3:1 or barriers will be in place less than 6 months, use nominal 16 inch high barriers with minimum 36 inch long posts spaced at 6 feet maximum, with fabric embedded at least 4 inches in ground.
3. Where slope gradient is steeper than 3:1 or barriers will be in place over 6 months, use nominal 28 inch high barriers, minimum 48 inch long posts spaced at 6 feet maximum, with fabric embedded at least 6 inches in ground.
4. Where slope gradient is steeper than 3:1 and vertical height of slope between barriers is more

than 20 feet, use nominal 32 inch high barriers with woven wire reinforcement and steel posts spaced at 4 feet maximum, with fabric embedded at least 6 inches in ground.

5. Install with top of fabric at nominal height and embedment as specified.
6. Do not splice fabric width; minimize splices in fabric length; splice at post only, overlapping at least 18 inches, with extra post.
7. Fasten fabric to wood posts using one of the following:
   a. Four 3/4 inch diameter, 1 inch long, 14 gage nails.
   b. Five 17-gage staples with 3/4 inch wide crown and 1/2 inch legs.
8. Fasten fabric to steel posts using wire, nylon cord, or integral pockets.
9. Wherever runoff will flow around end of barrier or over the top, provide temporary splash pad or other outlet protection; at such outlets in the run of the barrier, make barrier not more than 12 inches high with post spacing not more than 4 feet.

C. Straw Bale Rows:

1. Install bales in continuous rows with ends butting tightly, with one bale at each end of row turned uphill.
2. Install bales so that bindings are not in contact with the ground.
3. Embed bales at least 4 inches in the ground.
4. Anchor bales with at least two stakes per bale, driven at least 18 inches into the ground; drive first stake in each bale toward the previously placed bale to force bales together.
5. Fill gaps between ends of bales with loose straw wedged tightly.
6. Place soil excavated for trench against bales on the upslope side of the row, compacted.

D. Temporary Seeding:

1. When hydraulic seeder is used, seedbed preparation is not required.
2. When surface soil has been sealed by rainfall or consists of smooth undisturbed cut slopes, and conventional or manual seeding is to be used, prepare seedbed by scarifying sufficiently to allow seed to lodge and germinate.
3. If temporary mulching was used on planting area but not removed, apply nitrogen fertilizer at 1 pound per 1000 sq ft.
4. On soils of very low fertility, apply 10-10-10 fertilizer at rate of 12 to 16 pounds per 1000 sq ft.
5. Incorporate fertilizer into soil before seeding.
6. Apply seed uniformly; if using drill or cultipacker seeders place seed 1/2 to 1 inch deep.
7. Irrigate as required to thoroughly wet soil to depth that will ensure germination, without causing runoff or erosion.
8. Repeat irrigation as required until grass is established.

3.05 MAINTENANCE

A. Inspect preventive measures weekly, within 24 hours after the end of any storm that produces 0.5 inches or more rainfall at the project site, and daily during prolonged rainfall.

B. Repair deficiencies immediately.

C. Silt Fences:

1. Promptly replace fabric that deteriorates unless need for fence has passed.
2. Remove silt deposits that exceed one-third of the height of the fence.
3. Repair fences that are undercut by runoff or otherwise damaged, whether by runoff or other causes.

D. Straw Bale Rows:

1. Promptly replace bales that fall apart or otherwise deteriorate unless need has passed.
2. Remove silt deposits that exceed one-half of the height of the bales.
3. Repair bale rows that are undercut by runoff or otherwise damaged, whether by runoff or other causes.

E. Clean out temporary sediment control structures weekly and relocate soil on site.

F. Place sediment in appropriate locations on site; do not remove from site.

3.06 CLEAN UP

A. Remove temporary measures after permanent measures have been installed, unless permitted to remain by Architect.

B. Clean out temporary sediment control structures that are to remain as permanent measures.

C. Where removal of temporary measures would leave exposed soil, shape surface to an acceptable grade and finish to match adjacent ground surfaces.

END OF SECTION

PART 1 - GENERAL

1.01 RELATED DOCUMENTS

A. Drawings and general provisions of the Contract, including General and Supplementary Conditions and other Division 01 Specification Sections, apply to this Section.

1.02 SECTION INCLUDES

A. Project identification sign.

1.03 QUALITY ASSURANCE

A. Design sign and structure to withstand 50 miles/hr. wind velocity.

B. Sign Painter: Experienced as a professional sign painter for minimum three years.

C. Finishes, Painting: Adequate to withstand weathering, fading, and chipping for duration of construction.

PART 2 - PRODUCTS

2.01 SIGN MATERIALS

A. Structure and Framing: New, wood, structurally adequate.

B. Sign Surfaces: Exterior grade plywood with medium density overlay, minimum 3/4 inch thick, standard large sizes to minimize joints.

C. Rough Hardware: Galvanized.

D. Paint and Primers: Exterior quality, two coats; sign background of color as selected.

E. Lettering: Exterior quality paint, contrasting colors.

2.02 PROJECT IDENTIFICATION SIGN

A. Two painted signs of construction, design, and content shown on Drawings, location designated.

B. Content:

1. Project title, logo and name of Owner as indicated on Contract Documents.
2. Names and titles of Architect and Consultants.
3. Name of Prime Contractor.

C. Graphic Design, Colors, Style of Lettering: Designated by Architect.

PART 3 - EXECUTION

3.01 INSTALLATION

A. Install project identification sign within 30 days after date fixed by Notice to Proceed.

B. Erect at location of high public visibility adjacent to main entrance to site.

C. Install sign surface plumb and level, with butt joints. Anchor securely.

D. Paint exposed surfaces of sign, supports, and framing.

3.02 MAINTENANCE

A. Maintain signs and supports clean, repair deterioration and damage.

3.03 REMOVAL

A. Remove signs, framing, supports, and foundations at completion of Project and restore the area.

END OF SECTION

PART 1 - GENERAL

1.01 RELATED DOCUMENTS

A. Drawings and general provisions of the Contract, including General and Supplementary Conditions and other Division 01 Specification Sections, apply to this Section.

1.02 SUMMARY

A. Section includes administrative and procedural requirements for selection of products for use in Project; product delivery, storage, and handling; manufacturers' standard warranties on products; special warranties; and comparable products.

1.03 RELATED REQUIREMENTS

A. Section 01 21 00 - Allowances: for products selected under an allowance.

B. Section 01 23 00 - Alternates: for products selected under an alternate.

C. Section 01 25 00 - Substitution Procedures: for requests for substitutions.

D. Section 01 40 00 - Quality Requirements: Product quality monitoring.

E. Section 01 42 00 - References: for applicable industry standards for products specified.

F. Section 01 61 16 - Volatile Organic Compound (VOC) Content Restrictions: Requirements for VOC restricted product categories.

1.04 REFERENCE STANDARDS

A. 16 CFR 260 - Guides for the Use of Environmental Marketing Claims; Federal Trade Commission; current edition.

B. NFPA 70 - National Electrical Code; National Fire Protection Association; Most Recent Edition Adopted by Authority Having Jurisdiction, Including All Applicable Amendments and Supplements.

1.05 DEFINITIONS

A. Products: Items obtained for incorporating into the Work, whether purchased for Project or taken from previously purchased stock. The term "product" includes the terms "material," "equipment," "system," and terms of similar intent.

1. Named Products: Items identified by manufacturer's product name, including make or model number or other designation shown or listed in manufacturer's published product literature, that is current as of date of the Contract Documents.

2. New Products: Items that have not previously been incorporated into another project or facility. Products salvaged or recycled from other projects are not considered new products.

3. Comparable Product: Product that is demonstrated and approved through submittal process to have the indicated qualities related to type, function, dimension, in-service performance, physical properties, appearance, and other characteristics that equal or exceed those of specified product.

B. Basis-of-Design Product Specification: A specification in which a specific manufacturer's product is named and accompanied by the words "basis-of-design product," including make or model number or other designation, to establish the significant qualities related to type, function, dimension, in-service performance, physical properties, appearance, and other characteristics for purposes of evaluating comparable products of additional manufacturers named in the specification.

1.06 SUBMITTALS

A. Action Submittals

Comparable Product Requests: Submit request for consideration of each comparable product. Identify product or fabrication or installation method to be replaced. Include Specification Section number and title and Drawing numbers and titles.

1. Architect's Action: If necessary, Architect will request additional information or documentation for evaluation within one week of receipt of a comparable product request. Architect will notify Contractor of approval or rejection of proposed comparable product request within 15 days of receipt of request, or seven days of receipt of additional information or documentation, whichever is later.

a. Form of Approval: As specified in Section 01 25 00 - Submittal Procedures.

b. Use product specified if Architect does not issue a decision on use of a comparable

product request within time allocated.

B. Basis-of-Design Product Specification Submittal: Comply with requirements in Section 01 25 00 - Submittal Procedures. Show compliance with requirements.

C. Product Data Submittals: Submit manufacturer's standard published data. Mark each copy to identify applicable products, models, options, and other data. Supplement manufacturers' standard data to provide information specific to this Project.

D. Shop Drawing Submittals: Prepared specifically for this Project; indicate utility and electrical characteristics, utility connection requirements, and location of utility outlets for service for functional equipment and appliances.

E. Sample Submittals: Illustrate functional and aesthetic characteristics of the product, with integral parts and attachment devices. Coordinate sample submittals for interfacing work.

1. For selection from standard finishes, submit samples of the full range of the manufacturer's standard colors, textures, and patterns.

1.07 QUALITY ASSURANCE

A. Compatibility of Options: If Contractor is given option of selecting between two or more products for use on Project, select product compatible with products previously selected, even if previously selected products were also options.

1.08 PRODUCT WARRANTIES

A. Warranties specified in other Sections shall be in addition to, and run concurrent with, other warranties required by the Contract Documents. Manufacturer's disclaimers and limitations on product warranties do not relieve Contractor of obligations under requirements of the Contract Documents.

1. Manufacturer's Warranty: Written warranty furnished by individual manufacturer for a particular product and specifically endorsed by manufacturer to Owner.

2. Special Warranty: Written warranty required by the Contract Documents to provide specific rights for Owner.

B. Special Warranties: Prepare a written document that contains appropriate terms and identification, ready for execution.

1. Manufacturer's Standard Form: Modified to include Project-specific information and properly executed.

2. Specified Form: When specified forms are included with the Specifications, prepare a written document using indicated form properly executed.

3. Refer to Divisions 02 through 33. Sections for specific content requirements and particular requirements for submitting special warranties.

C. Submittal Time: Comply with requirements in Section 01 77 00 - Closeout Procedures.

PART 2 - PRODUCTS

2.01 EXISTING PRODUCTS

A. Do not use materials and equipment removed from existing premises unless specifically required or permitted by the Contract Documents.

B. Unforeseen historic items encountered remain the property of the Owner; notify Owner promptly upon discovery; protect, remove, handle, and store as directed by Owner.

C. Existing materials and equipment indicated to be removed, but not to be re-used, relocated, reinstalled, delivered to the Owner, or otherwise indicated as to remain the property of the Owner, become the property of the Contractor; remove from site.

D. Reused Products: Reused products include materials and equipment previously used in this or other construction, salvaged and refurbished as specified.

2.02 NEW PRODUCTS

A. Provide new products unless specifically required or permitted by the Contract Documents.

B. Do not use products having any of the following characteristics unless specifically required or approved by Owner and Architect:

1. Made outside the United States, its territories, Canada, or Mexico.

2. Made using or containing CFC's or HCFC's.

3. Made of wood from newly cut old growth timber.

2.03 PRODUCT SELECTION PROCEDURES

A. General Product Requirements: Provide products that comply with the Contract Documents, are undamaged and, unless otherwise indicated, are new at time of installation.

1. Provide products complete with accessories, trim, finish, fasteners, and other items needed for a complete installation and indicated use and effect.

2. Standard Products: If available, and unless custom products or nonstandard options are specified, provide standard products of types that have been produced and used successfully in similar situations on other projects.

3. Owner reserves the right to limit selection to products with warranties not in conflict with requirements of the Contract Documents.

4. Where products are accompanied by the term "as selected," Architect will make selection.

5. Descriptive, performance, and reference standard requirements in the Specifications establish salient characteristics of products.

B. Product Selection Procedures:

1. Product: Where Specifications name a single manufacturer and product, provide the named product that complies with requirements. Comparable products or substitutions for Contractor's convenience will not be considered.

2. Manufacturer/Source: Where Specifications name a single manufacturer or source, provide a product by the named manufacturer or source that complies with requirements. Comparable products or substitutions for Contractor's convenience will not be considered.

3. Products:

a. Restricted List: Where Specifications include a list of names of both manufacturers and products, provide one of the products listed that complies with requirements. Comparable products or substitutions for Contractor's convenience will be considered, unless otherwise indicated.

b. Nonrestricted List: Where Specifications include a list of names of both available manufacturers and products, provide one of the products listed, or an unnamed product, that complies with requirements. Comply with requirements in "Comparable Products" Article for consideration of an unnamed product.

4. Manufacturers:

a. Restricted List: Where Specifications include a list of manufacturers' names, provide a product by one of the manufacturers listed that complies with requirements. Comparable products or substitutions for Contractor's convenience will be considered, unless otherwise indicated.

b. Nonrestricted List: Where Specifications include a list of available manufacturers, provide a product by one of the manufacturers listed, or a product by an unnamed manufacturer, that complies with requirements. Comply with requirements in "Comparable Products" Article for consideration of an unnamed manufacturer's product.

5. Basis-of-Design Product: Where Specifications name a product, or refer to a product indicated on Drawings, and include a list of manufacturers, provide the specified or indicated product or a comparable product by one of the other named manufacturers. Drawings and Specifications indicate sizes, profiles, dimensions, and other characteristics that are based on the product named. Comply with requirements in "Comparable Products" Article for consideration of an unnamed product by one of the other named manufacturers.

C. Visual Matching Specification: Where Specifications require "match Architect's sample", provide a product that complies with requirements and matches Architect's sample. Architect's decision will be final on whether a proposed product matches.

1. If no product available within specified category matches and complies with other specified requirements, comply with requirements in Section 01 77 00 - Substitution Procedures for proposal of product.

D. Visual Selection Specification: Where Specifications include the phrase "as selected by Architect from manufacturer's full range" or similar phrase, select a product that complies with requirements. Architect will select color, gloss, pattern, density, or texture from manufacturer's product line that includes both standard and premium items.

2.04 COMPARABLE PRODUCTS

A. Conditions for Consideration: Architect will consider Contractor's request for comparable product when the following conditions are satisfied. If the following conditions are not satisfied, Architect may return requests without action, except to record noncompliance with these requirements:

1. Evidence that the proposed product does not require revisions to the Contract Documents that it is consistent with the Contract Documents and will produce the indicated results, and that it is compatible with other portions of the Work.
2. Detailed comparison of significant qualities of proposed product with those named in the Specifications. Significant qualities include attributes such as performance, weight, size, durability, visual effect, and specific features and requirements indicated.
3. Evidence that proposed product provides specified warranty.
4. List of similar installations for completed projects with project names and addresses and names and addresses of architects and owners, if requested.
5. Samples, if requested.

2.05 MAINTENANCE MATERIALS

A. Furnish extra materials, spare parts, tools, and software of types and in quantities specified in individual specification sections.

B. Deliver to Project site; obtain receipt prior to final payment.

PART 3 - EXECUTION

3.01 OWNER-SUPPLIED PRODUCTS

A. Owner's Responsibilities:
1. Arrange for and deliver Owner reviewed shop drawings, product data, and samples, to Contractor.
2. Arrange and pay for product delivery to site.
3. On delivery, inspect products jointly with Contractor.
4. Submit claims for transportation damage and replace damaged, defective, or deficient items.
5. Arrange for manufacturers' warranties, inspections, and service.

B. Contractor's Responsibilities:
1. Review Owner reviewed shop drawings, product data, and samples.
2. Receive and unload products at site; inspect for completeness or damage jointly with Owner.
3. Handle, store, install and finish products.
4. Repair or replace items damaged after receipt.

3.02 TRANSPORTATION AND HANDLING

A. Coordinate schedule of product delivery to designated prepared areas in order to minimize site storage time and potential damage to stored materials.

B. Coordinate delivery with installation time to ensure minimum holding time for items that are flammable, hazardous, easily damaged, or sensitive to deterioration, theft, and other losses.

C. Transport and handle products in accordance with manufacturer's instructions.

D. Transport materials in covered trucks to prevent contamination of product and littering of surrounding areas.

E. Deliver products to Project site in an undamaged condition in manufacturer's original sealed container or other packaging system, complete with labels and instructions for handling, storing, unpacking, protecting, and installing.

F. Promptly inspect shipments to ensure that products comply with requirements, quantities are correct, and products are undamaged.

G. Provide equipment and personnel to handle products by methods to prevent soiling, disfigurement, or damage.

H. Arrange for the return of packing materials, such as wood pallets, where economically feasible.

3.03 STORAGE AND PROTECTION

A. Designate receiving/storage areas for incoming products so that they are delivered according to installation schedule and placed convenient to work area in order to minimize waste due to excessive materials handling and misapplication.

B. Store and protect products in accordance with manufacturers' instructions.

C. Store with seals and labels intact and legible.

D. Store sensitive products in weather tight, climate controlled, enclosures in an environment favorable to

product.

E. For exterior storage of fabricated products, place on sloped supports above ground.

F. Cover products subject to deterioration with impervious sheet covering. Provide ventilation to prevent condensation and degradation of products.

G. Prevent contact with material that may cause corrosion, discoloration, or staining.

H. Provide equipment and personnel to store products by methods to prevent soiling, disfigurement, or damage.

I. Arrange storage of products to permit access for inspection. Periodically inspect to verify products are undamaged and are maintained in acceptable condition.

3.04 SYSTEMS DEMONSTRATION

A. Prior to final inspection, demonstrate operation of each system to Architect and Owner.

B. Instruct Owner's personnel in operation, adjustment, and maintenance of equipment and systems, using the operation and maintenance data as the basis of instruction.

END OF SECTION

DIVISION 01 - GENERAL REQUIREMENTS

VOLATILE ORGANIC COMPOUND (VOC) CONTENT RESTRICTIONS SECTION 01 61 16

PART 1 - GENERAL

1.01 RELATED DOCUMENTS

A. Drawings and general provisions of the Contract, including General and Supplementary Conditions and other Division 01 Specification Sections, apply to this Section.

1.02 SECTION INCLUDES

A. VOC restrictions for product categories listed below under "DEFINITIONS."

1.03 RELATED REQUIREMENTS

A. Section 01 30 00 - Administrative Requirements: Submittal procedures.

B. Section 01 60 00 - Product Requirements: Fundamental product requirements, substitutions and product options, delivery, storage, and handling.

1.04 DEFINITIONS

A. VOC-Restricted Products: All products of each of the following categories when installed or applied on-site in the building interior:

1. Adhesives, sealants, and sealer coatings.
2. Carpet.
3. Carpet cushion.
4. Carpet tile.
5. Resilient floor coverings.
6. Wood flooring.
7. Paints and coatings.
8. Insulation.
9. Gypsum board.
10. Acoustical ceilings and panels.
11. Cabinet work.
12. Wall coverings.
13. Composite wood and agrifiber products used either alone or as part of another product.
14. Other products when specifically stated in the specifications.

B. Interior of Building: Anywhere inside the exterior weather barrier.

C. Adhesives: All gunnable, trowelable, liquid-applied, and aerosol adhesives, whether specified or not; including flooring adhesives, resilient base adhesives, and pipe jointing adhesives.

D. Sealants: All gunnable, trowelable, and liquid-applied joint sealants and sealant primers, whether specified or not; including fire stopping sealants and duct joint sealers.

1.05 REFERENCE STANDARDS

(Current Edition at Date of Bid)

A. CRI (GLCC) -Green Label Testing Program -Approved Product Categories for Carpet Cushion; Carpet and Rug Institute.

B. CRI (GLP) -Green Label Plus Carpet Testing Program -Approved Products; Carpet and Rug Institute.

C. GreenSeal GS-36 -Commercial Adhesives; Green Seal, Inc..

D. SCAQMD 1168 -South Coast Air Quality Management District Rule No.1168; www.aqmd.gov.

E. SCS (CPD) -SCS Certified Products; Scientific Certification Systems; current listings at www.scscertified.com.

1.06 SUBMITTALS

A. See Section 01 30 00 -Administrative Requirements, for submittal procedures.

B. Evidence of Compliance: Submit for each different product in each applicable category.

C. Product Data: For each VOC-restricted product used in the project, submit product data showing compliance, except when another type of evidence of compliance is required.

D. Installer Certifications for Accessory Materials: Require each installer of any type of product (not just the

products for which VOC restrictions are specified) to certify that either 1) no adhesives, joint sealants, paints, coatings, or composite wood or agrifiber products have been used in the installation of his products, or 2) that such products used comply with these requirements.

PART 2 - PRODUCTS

2.01 MATERIALS

A. Adhesives and Joint Sealants: Provide only products having volatile organic compound (VOC) content not greater than required by South Coast Air Quality Management District Rule No.1168.

1. Evidence of Compliance: Acceptable types of evidence are:

a. Report of laboratory testing performed in accordance with requirements.

b. Published product data showing compliance with requirements.

c. Certification by manufacturer that product complies with requirements.

B. Aerosol Adhesives: Provide only products having volatile organic compound (VOC) content not greater than required by GreenSeal GS-36.

1. Evidence of Compliance: Acceptable types of evidence are:

a. Current GreenSeal Certification.

b. Report of laboratory testing performed in accordance with GreenSeal GS-36 requirements.

c. Published product data showing compliance with requirements.

C. Paints and Coatings: Provide products having VOC content as specified in Section 09 90 00.

D. Carpet and Adhesive: Provide products having VOC content not greater than that required for CRI Green Label Plus certification.

1. Evidence of Compliance: Acceptable types of evidence are:

a. Current Green Label Plus Certification.

b. Report of laboratory testing performed in accordance with requirements.

E. Carpet Tile and Adhesive: Provide products having VOC content as specified in Section 09 68 13.

F. Composite Wood and Agrifiber Products and Adhesives Used for Laminating Them: Provide products having no added urea-formaldehyde resins.

1. Evidence of Compliance: Acceptable types of evidence are:

a. Current SCS "No Added Urea Formaldehyde" certification; www.scscertified.com.

b. Published product data showing compliance with requirements.

c. Certification by manufacturer that product complies with requirements.

G. Other Product Categories: Comply with limitations specified elsewhere.

PART 3 - EXECUTION

3.01 FIELD QUALITY CONTROL

A. Owner reserves the right to reject non-compliant products, whether installed or not, and require their removal and replacement with compliant products at no extra cost to Owner.

B. All additional costs to restore indoor air quality due to installation of non-compliant products will be borne by Contractor.

END OF SECTION

PART 1 - GENERAL

1.01 RELATED DOCUMENTS

A. Drawings and general provisions of the Contract, including General and Supplementary Conditions and other Division 01 Specification Sections, apply to this Section.

1.02 INTENT

A. It is the specific intent of this Section of the Specifications to require all materials systems, products and other items to be in full and complete compliance with the ADA.

PART 2 - PRODUCTS

2.01 PRODUCTS, SYSTEMS, MATERIALS, ITEMS

A. All Products, Systems, Materials or others items incorporated into the Work, to include job-built items, shall be in full and complete compliance with the ADA requirements. This requirement shall not be waived even though any Product, System, Material or other item is not specifically required to comply with ADA requirements in other Sections of these Specifications.

PART 3 - EXECUTION

3.01 INSTALLATION

A. Install all Products, Systems, Materials and other items in full and complete compliance with ADA requirements.

END OF SECTION

PART 1 - GENERAL

1.01 RELATED DOCUMENTS

A. Drawings and general provisions of the Contract, including General and Supplementary Conditions and other Division 01 Specification Sections, apply to this Section.

1.02 COMPLIANCE WITH APPLICABLE LAW

A. The Contractor shall fully comply with the requirements of Public Law 99-519 the Asbestos Hazard Emergency Response Act of 1986 and the United States Environmental Protection Agency Regulations promulgated October 30, 1987, Federal Register Volume 52, No. 210 as amended or supplemented on the Bid Date.

B. The Contractor shall enforce compliance with this law and these regulations to all Sub-Contractors, Sub-Subcontractors and Material Suppliers on this Project. Each Subcontract, Sub-Subcontract and Purchase Order applicable to this project shall contain Subparagraph A directly above.

1.03 INTENT

A. It is the specific intent of this Section of the Specifications to prohibit the use or installation of any product, material, component of any product or material assembled from two or more separate products or materials, or any item into the Work which contains more than one (1) percent asbestos by weight, and, thus, would be classified by Law as an Asbestos Containing Building Material.

PART 2 - PRODUCTS

2.01 ASBESTOS MATERIALS

A. No asbestos materials or products containing asbestos shall be installed in the project.

B. If any such material or product is inadvertently installed, it shall be removed and replaced with an approved substitute, at no cost to the Owner.

C. It shall be the Contractors responsibility to verify that all materials and products used are asbestos-free, regardless of what may be called for in the Contract Documents.

D. The Contractor shall provide a notarized certificate as required in Section 01 78 00, that these conditions have been met.

PART 3 - EXECUTION

NOT USED

END OF SECTION

PART 1 - GENERAL

1.01 RELATED DOCUMENTS

A. Drawings and general provisions of the Contract, including General and Supplementary Conditions and other Division 01 Specification Sections, apply to this Section.

1.02 COMPLIANCE WITH APPLICABLE LAW AND REGULATION

A. Fully comply with the requirements of The Lead Contamination Control Act, and other applicable regulations and laws controlling the use of lead in buildings.

B. The Contractor shall enforce compliance with applicable laws and regulations to all Subcontractors, Sub-subcontractors and Material Suppliers on this Project. Each subcontract, sub-subcontract and purchase order applicable to this Project shall contain Subparagraph A directly above.

1.03 INTENT

A. It is the specific intent of this Section of the Specification to require the use of lead-free solder for all water distribution systems, to include the internal plumbing of all factory assembled products such as water heaters, drinking fountains, electric water coolers and faucets.

PART 2 - PRODUCTS

2.01 LEAD MATERIALS

A. No lead materials or products containing lead shall be installed in the project.

B. If any such material or product is inadvertently installed, it shall be removed and replaced with an approved substitute, at no cost to the Owner.

C. It shall be the Contractors responsibility to verify that all materials and products used are asbestos-free, regardless of what may be called for in the Contract Documents.

D. The Contractor shall provide a notarized certificate as required in Section 01 78 00, that these conditions have been met.

PART 3 - EXECUTION

NOT USED

END OF SECTION

PART 1 - GENERAL

1.01 RELATED DOCUMENTS

A. Drawings and general provisions of the Contract, including General and Supplementary Conditions and other Division 01 Specification Sections, apply to this Section.

1.02 SUMMARY

A. Section includes general administrative and procedural requirements governing execution of the Work including, but not limited to, the following:

1. Construction layout.
2. Field engineering and surveying.
3. Installation of the Work.
4. Cutting and patching.
5. Coordination of Owner-installed products.
6. Progress cleaning.
7. Starting and adjusting.
8. Protection of installed construction.
9. Correction of the Work.

B. Related Sections:

1. Section 01 77 00 - Closeout Procedures for submitting final property survey with Project Record Documents, recording of Owner-accepted deviations from indicated lines and levels, and final cleaning.

1.03 DEFINITIONS

A. Cutting: Removal of in-place construction necessary to permit installation or performance of other work.

B. Patching: Fitting and repair work required to restore construction to original conditions after installation of other work.

1.04 INFORMATIONAL SUBMITTALS

A. Certificates: Submit certificate signed by land surveyor certifying that location and elevation of improvements comply with requirements.

B. Landfill Receipts: Submit copy of receipts issued by a landfill facility, licensed to accept hazardous materials, for hazardous waste disposal.

1.05 QUALITY ASSURANCE

A. Land Surveyor Qualifications: A professional land surveyor who is legally qualified to practice in jurisdiction where Project is located and who is experienced in providing land-surveying services of the kind indicated.

B. Cutting and Patching: Comply with requirements for and limitations on cutting and patching of construction elements.

1. Structural Elements: When cutting and patching structural elements, notify Architect of locations and details of cutting and await directions from the Architect before proceeding. Shore, brace, and support structural element during cutting and patching. Do not cut and patch structural elements in a manner that could change their load-carrying capacity or increase deflection
2. Operational Elements: Do not cut and patch operating elements and related components in a manner that results in reducing their capacity to perform as intended or that results in increased maintenance or decreased operational life or safety. Operational elements include the following:
    a. Primary operational systems and equipment.
    b. Fire separation assemblies.
    c. Air or smoke barriers.
    d. Fire-suppression systems.
    e. Mechanical systems piping and ducts.
    f. Control systems.

g. Communication systems.

h. Fire-detection and -alarm systems.

i. Conveying systems.

j. Electrical wiring systems.

k. Operating systems of special construction.

3. Other Construction Elements: Do not cut and patch other construction elements or components in a manner that could change their load-carrying capacity, that results in reducing their capacity to perform as intended, or that results in increased maintenance or decreased operational life or safety. Other construction elements include but are not limited to the following:

a. Water, moisture, or vapor barriers.

b. Membranes and flashings.

c. Exterior curtain-wall construction.

d. Sprayed fire-resistive material.

e. Equipment supports.

f. Piping, ductwork, vessels, and equipment.

g. Noise- and vibration-control elements and systems.

4. Visual Elements: Do not cut and patch construction in a manner that results in visual evidence of cutting and patching. Do not cut and patch exposed construction in a manner that would, in Architect's opinion, reduce the building's aesthetic qualities. Remove and replace construction that has been cut and patched in a visually unsatisfactory manner.

C. Manufacturer's Installation Instructions: Obtain and maintain on-site manufacturer's written recommendations and instructions for installation of products and equipment.

1.06 WARRANTY

A. Existing Warranties: Remove, replace, patch, and repair materials and surfaces cut or damaged during installation or cutting and patching operations, by methods and with materials so as not to void existing warranties.

PART 2 - PRODUCTS

2.01 MATERIALS

A. General: Comply with requirements specified in other Sections.

B. In-Place Materials: Use materials for patching identical to in-place materials. For exposed surfaces, use materials that visually match in-place adjacent surfaces to the fullest extent possible.

1. If identical materials are unavailable or cannot be used, use materials that, when installed, will provide a match acceptable to the Architect for the visual and functional performance of in-place materials.

PART 3 - EXECUTION

3.01 EXAMINATION

A. Existing Conditions: The existence and location of underground and other utilities and construction indicated as existing are not guaranteed. Before beginning sitework, investigate and verify the existence and location of underground utilities, mechanical and electrical systems, and other construction affecting the Work.

1. Before construction, verify the location and invert elevation at points of connection of sanitary sewer, storm sewer, and water-service piping; underground electrical services, and other utilities.

2. Furnish location data for work related to Project that must be performed by public utilities serving Project site.

B. Examination and Acceptance of Conditions: Before proceeding with each component of the Work, examine substrates, areas, and conditions, with Installer or Applicator present where indicated, for compliance with requirements for installation tolerances and other conditions affecting performance. Record observations.

1. Verify compatibility with and suitability of substrates, including compatibility with existing finishes or primers.

2. Examine roughing-in for mechanical and electrical systems to verify actual locations of connections before equipment and fixture installation.

3. Examine walls, floors, and roofs for suitable conditions where products and systems are to be installed.

4. Proceed with installation only after unsatisfactory conditions have been corrected. Proceeding with the Work indicates acceptance of surfaces and conditions.

C. Written Report: Where a written report listing conditions detrimental to performance of the Work is required by other Sections, include the following:

1. Description of the Work.

2. List of detrimental conditions, including substrates.

3. List of unacceptable installation tolerances.

4. Recommended corrections.

D. Proceed with installation only after unsatisfactory conditions have been corrected. Proceeding with the Work indicates acceptance of surfaces and conditions.

3.02 PREPARATION

A. Existing Utility Information: Furnish information to Owner that is necessary to adjust, move, or relocate existing utility structures, utility poles, lines, services, or other utility appurtenances located in or affected by construction. Coordinate with authorities having jurisdiction.

B. Field Measurements: Take field measurements as required to fit the Work properly. Recheck measurements before installing each product. Where portions of the Work are indicated to fit to other construction, verify dimensions of other construction by field measurements before fabrication. Coordinate fabrication schedule with construction progress to avoid delaying the Work.

C. Space Requirements: Verify space requirements and dimensions of items shown diagrammatically on Drawings.

D. Review of Contract Documents and Field Conditions: Immediately on discovery of the need for clarification of the Contract Documents caused by differing field conditions outside the control of the Contractor, submit a request for information to Architect according to requirements in Division 01 Section "Project Management and Coordination."

3.03 CONSTRUCTION LAYOUT

A. Verification: Before proceeding to lay out the Work, verify layout information shown on Drawings, in relation to the property survey and existing benchmarks. If discrepancies are discovered, notify Architect promptly.

B. General: Lay out the Work using accepted surveying practices.

1. Establish benchmarks and control points to set lines and levels at each story of construction and elsewhere as needed to locate each element of Project.

2. Establish limits on use of Project site.

3. Establish dimensions within tolerances indicated. Do not scale Drawings to obtain required dimensions.

4. Inform installers of lines and levels to which they must comply.

5. Check the location, level and plumb, of every major element as the Work progresses.

6. Notify Architect when deviations from required lines and levels exceed allowable tolerances.

7. Close site surveys with an error of closure equal to or less than the standard established by authorities having jurisdiction.

C. Site Improvements: Locate and lay out site improvements, including pavements, grading, fill and topsoil placement, utility slopes, and rim and invert elevations.

D. Building Lines and Levels: Locate and lay out control lines and levels for structures, building foundations, column grids, and floor levels, including those required for mechanical and electrical work. Transfer survey markings and elevations for use with control lines and levels. Level foundations and piers from two or more locations.

E. Record Log: Maintain a log of layout control work. Record deviations from required lines and levels. Include beginning and ending dates and times of surveys, weather conditions, name and duty of each survey party member, and types of instruments and tapes used. Make the log available for reference by Architect.

3.04 FIELD ENGINEERING

A. Reference Points: Locate existing permanent benchmarks, control points, and similar reference points

before beginning the Work. Preserve and protect permanent benchmarks and control points during construction operations.

1. Do not change or relocate existing benchmarks or control points without prior written approval of Architect. Report lost or destroyed permanent benchmarks or control points promptly. Report the need to relocate permanent benchmarks or control points to Architect and before proceeding.
2. Replace lost or destroyed permanent benchmarks and control points promptly. Base replacements on the original survey control points.

B. Benchmarks: Establish and maintain a minimum of two permanent benchmarks on Project site, referenced to data established by survey control points. Comply with authorities having jurisdiction for type and size of benchmark.

1. Record benchmark locations, with horizontal and vertical data, on Project Record Documents.
2. Where the actual location or elevation of layout points cannot be marked, provide temporary reference points sufficient to locate the Work.
3. Remove temporary reference points when no longer needed. Restore marked construction to its original condition.

3.05 INSTALLATION

A. General: Locate the Work and components of the Work accurately, in correct alignment and elevation, as indicated.

1. Make vertical work plumb and make horizontal work level.
2. Where space is limited, install components to maximize space available for maintenance and ease of removal for replacement.
3. Conceal pipes, ducts, and wiring in finished areas, unless otherwise indicated.

B. Comply with manufacturer's written instructions and recommendations for installing products in applications indicated.

C. Install products at the time and under conditions that will ensure the best possible results. Maintain conditions required for product performance until Substantial Completion.

D. Conduct construction operations so no part of the Work is subjected to damaging operations or loading in excess of that expected during normal conditions of occupancy.

E. Sequence the Work and allow adequate clearances to accommodate movement of construction items on site and placement in permanent locations.

F. Tools and Equipment: Do not use tools or equipment that produce harmful noise levels.

G. Templates: Obtain and distribute to the parties involved templates for work specified to be factory prepared and field installed. Check Shop Drawings of other work to confirm that adequate provisions are made for locating and installing products to comply with indicated requirements.

H. Attachment: Provide blocking and attachment plates and anchors and fasteners of adequate size and number to securely anchor each component in place, accurately located and aligned with other portions of the Work. Where size and type of attachments are not indicated, verify size and type required for load conditions.

1. Mounting Heights: Where mounting heights are not indicated, mount components at heights directed by Architect.
2. Allow for building movement, including thermal expansion and contraction.
3. Coordinate installation of anchorages. Furnish setting drawings, templates, and directions for installing anchorages, including sleeves, concrete inserts, anchor bolts, and items with integral anchors, that are to be embedded in concrete or masonry. Deliver such items to Project site in time for installation.

I. Joints: Make joints of uniform width. Where joint locations in exposed work are not indicated, arrange joints for the best visual effect. Fit exposed connections together to form hairline joints.

J. Hazardous Materials: Use products, cleaners, and installation materials that are not considered hazardous.

3.06 CUTTING AND PATCHING

A. Cutting and Patching, General: Employ skilled workers to perform cutting and patching. Proceed with cutting and patching at the earliest feasible time, and complete without delay.

1. Cut in-place construction to provide for installation of other components or performance of other construction, and subsequently patch as required to restore surfaces to their original

condition.

B. Existing Warranties: Remove, replace, patch, and repair materials and surfaces cut or damaged during installation or cutting and patching operations, by methods and with materials so as not to void existing warranties.

C. Temporary Support: Provide temporary support of work to be cut.

D. Protection: Protect in-place construction during cutting and patching to prevent damage. Provide protection from adverse weather conditions for portions of Project that might be exposed during cutting and patching operations.

E. Existing Utility Services and Mechanical/Electrical Systems: Where existing services/systems are required to be removed, relocated, or abandoned, bypass such services/systems before cutting to prevent interruption to occupied areas.

F. Cutting: Cut in-place construction by sawing, drilling, breaking, chipping, grinding, and similar operations, including excavation, using methods least likely to damage elements retained or adjoining construction. If possible, review proposed procedures with original Installer; comply with original Installer's written recommendations.

1. In general, use hand or small power tools designed for sawing and grinding, not hammering and chopping. Cut holes and slots neatly to minimum size required, and with minimum disturbance of adjacent surfaces. Temporarily cover openings when not in use.

2. Finished Surfaces: Cut or drill from the exposed or finished side into concealed surfaces.

3. Concrete and Masonry: Cut using a cutting machine, such as an abrasive saw or a diamond-core drill. Do not cut existing reinforcing. X-ray or use another method of locating reinforcing and then adjust the exact location for core-drilling. Verify with Architect the final location of all penetrations to be drilled.

4. Excavating and Backfilling: Comply with requirements in applicable Division 2 Sections where required by cutting and patching operations.

5. Mechanical and Electrical Services: Cut off pipe or conduit in walls or partitions to be removed. Cap, valve, or plug and seal remaining portion of pipe or conduit to prevent entrance of moisture or other foreign matter after cutting.

6. Proceed with patching after construction operations requiring cutting are complete.

F. Patching: Patch construction by filling, repairing, refinishing, closing up, and similar operations following performance of other work. Patch with durable seams that are as invisible as practicable. Provide materials and comply with installation requirements specified in other Sections, where applicable.

1. Inspection: Where feasible, test and inspect patched areas after completion to demonstrate physical integrity of installation.

2. Exposed Finishes: Restore exposed finishes of patched areas and extend finish restoration into retained adjoining construction in a manner that will minimize evidence of patching and refinishing.

a. Clean piping, conduit, and similar features before applying paint or other finishing materials.

b. Restore damaged pipe covering to its original condition.

3. Floors and Walls: Where walls or partitions that are removed extend one finished area into another, patch and repair floor and wall surfaces in the new space. Provide an even surface of uniform finish, color, texture, and appearance. Remove in-place floor and wall coverings and replace with new materials, if necessary, to achieve uniform color and appearance.

a. Where patching occurs in a painted surface, prepare substrate and apply primer and intermediate paint coats appropriate for substrate over the patch, and apply final paint coat over entire unbroken surface containing the patch. Provide additional coats until patch blends with adjacent surfaces.

4. Ceilings: Patch, repair, or rehang in-place ceilings as necessary to provide an even-plane surface of uniform appearance.

5. Exterior Building Enclosure: Patch components in a manner that restores enclosure to a weathertight condition.

G. Cleaning: Clean areas and spaces where cutting and patching are performed. Remove paint, mortar, oils, putty, and similar materials from adjacent finished surfaces.

3.07 OWNER-INSTALLED PRODUCTS

A. Site Access: Provide access to Project site for Owner's construction personnel.

B. Coordination: Coordinate construction and operations of the Work with work performed by Owner's construction personnel.

1. Construction Schedule: Inform Owner of Contractor's preferred construction schedule for Owner's portion of the Work. Adjust construction schedule based on a mutually agreeable timetable. Notify Owner if changes to schedule are required due to differences in actual construction progress.

2. Preinstallation Conferences: Include Owner's construction personnel at preinstallation conferences covering portions of the Work that are to receive Owner's work. Attend preinstallation conferences conducted by Owner's construction personnel if portions of the Work depend on Owner's construction.

3.08 PROGRESS CLEANING

A. General: Clean Project site and work areas daily, including common areas. Enforce requirements strictly. Dispose of materials lawfully.

1. Comply with requirements in NFPA 241 for removal of combustible waste materials and debris.

2. Do not hold waste materials more than seven days during normal weather or three days if the temperature is expected to rise above 80 deg F (27 deg C).

3. Containerize hazardous and unsanitary waste materials separately from other waste. Mark containers appropriately and dispose of legally, according to regulations.

a. Use containers intended for holding waste materials of type to be stored.

B. Site: Maintain Project site free of waste materials and debris.

C. Work Areas: Clean areas where work is in progress to the level of cleanliness necessary for proper execution of the Work.

1. Remove liquid spills promptly.

2. Where dust would impair proper execution of the Work, broom-clean or vacuum the entire work area, as appropriate.

D. Installed Work: Keep installed work clean. Clean installed surfaces according to written instructions of manufacturer or fabricator of product installed, using only cleaning materials specifically recommended. If specific cleaning materials are not recommended, use cleaning materials that are not hazardous to health or property and that will not damage exposed surfaces.

E. Concealed Spaces: Remove debris from concealed spaces before enclosing the space.

F. Exposed Surfaces in Finished Areas: Clean exposed surfaces and protect as necessary to ensure freedom from damage and deterioration at time of Substantial Completion.

G. Waste Disposal: Do not bury or burn waste materials on-site. Do not wash waste materials down sewers or into waterways.

H. During handling and installation, clean and protect construction in progress and adjoining materials already in place. Apply protective covering where required to ensure protection from damage or deterioration at Substantial Completion.

I. Clean and provide maintenance on completed construction as frequently as necessary through the remainder of the construction period. Adjust and lubricate operable components to ensure operability without damaging effects.

J. Limiting Exposures: Supervise construction operations to assure that no part of the construction, completed or in progress, is subject to harmful, dangerous, damaging, or otherwise deleterious exposure during the construction period.

3.09 STARTING AND ADJUSTING

A. Start equipment and operating components to confirm proper operation. Remove malfunctioning units, replace with new units, and retest.

B. Adjust equipment for proper operation. Adjust operating components for proper operation without binding.

C. Test each piece of equipment to verify proper operation. Test and adjust controls and safeties. Replace damaged and malfunctioning controls and equipment.

D. Manufacturer's Field Service: Comply with qualification requirements in Division 1 Section "Quality Requirements."

3.10 PROTECTION OF INSTALLED CONSTRUCTION

A. Provide final protection and maintain conditions that ensure installed Work is without damage or deterioration at time of Substantial Completion.

B. Comply with manufacturer's written instructions for temperature and relative humidity.

3.11 CORRECTION OF THE WORK

A. Repair or remove and replace defective construction. Restore damaged substrates and finishes.

1. Repairing includes replacing defective parts, refinishing damaged surfaces, touching up with matching materials, and properly adjusting operating equipment.

B. Restore permanent facilities used during construction to their specified condition.

C. Remove and replace damaged surfaces that are exposed to view if surfaces cannot be repaired without visible evidence of repair.

D. Repair components that do not operate properly. Remove and replace operating components that cannot be repaired.

E. Remove and replace chipped, scratched, and broken glass or reflective surfaces.

END OF SECTION

DIVISION 01 - GENERAL REQUIREMENTS

CONSTRUCTION WASTE MANAGEMENT SECTION 01 74 19

PART I - GENERAL

1.01 RELATED DOCUMENTS

A. Drawings and general provisions of the Contract, including General and Supplementary Conditions and other Division 01 Specification Sections, apply to this Section.

1.02 SUMMARY

A. Section includes administrative and procedural requirements for the following:

1. Disposing of nonhazardous construction waste.

1.03 Related Requirements

A. Section 02 41 13 - Selective Site Demolition: for disposition of waste resulting from partial demolition of buildings, structures, and site improvements, and for disposition of hazardous waste.

B. Section 04 22 00 - Concrete Unit Masonry: for disposal requirements for masonry waste.

C. Section 31 10 00 - Site Clearing: for disposition of waste resulting from site clearing and removal of above- and below-grade improvements.

1.04 DEFINITIONS

A. Construction Waste: Building and site improvement materials and other solid waste resulting from construction, remodeling, renovation, or repair operations. Construction waste includes packaging.

B. Demolition Waste: Building and site improvement materials resulting from demolition or selective demolition operations.

C. Disposal: Removal off-site of construction waste and subsequent sale, recycling, reuse, or deposit in landfill or incinerator acceptable to authorities having jurisdiction.

D. Recycle: Recovery of demolition or construction waste for subsequent processing in preparation for reuse.

E. Salvage: Recovery of demolition or construction waste and subsequent sale or reuse in another facility.

F. Salvage and Reuse: Recovery of demolition or construction waste and subsequent incorporation into the Work.

1.05 QUALITY ASSURANCE

A. Waste Management Conference: Conduct conference at Project site to comply with requirements in Division 01 Section "Project Management and Coordination."

B. Regulatory Requirements: Comply with hauling and disposal regulations of authorities having jurisdiction.

PART 2 - PRODUCTS

NOT USED

PART 3 - EXECUTION

3.01 PLAN IMPLEMENTATION

A. General: Implement approved waste management plan. Provide handling, containers, storage, signage, transportation, and other items as required to implement waste management plan during the entire duration of the Contract.

1. Comply with operation, termination, and removal requirements in Section 01 50 00 - Temporary Facilities and Controls.

B. Training: Train workers, subcontractors, and suppliers on proper waste management procedures, as appropriate for the Work occurring at Project site.

C. Site Access and Temporary Controls: Conduct waste management operations to ensure minimum interference with roads, streets, walks, walkways, and other adjacent occupied and used facilities.

1. Designate and label specific areas on Project site necessary for separating materials that are to be salvaged, recycled, reused, donated, and sold.

2. Comply with Section 01 50 00 - Temporary Facilities and Controls for controlling dust and dirt, environmental protection, and noise control.

3.02 SALVAGING DEMOLITION WASTE

A. Salvaged Items for Reuse in the Work: Salvage items for reuse and handle as follows:

1. Clean salvaged items.
2. Pack or crate items after cleaning. Identify contents of containers with label indicating elements, date of removal, quantity, and location where removed.
3. Store items in a secure area until installation.
4. Protect items from damage during transport and storage.
5. Install salvaged items to comply with installation requirements for new materials and equipment. Provide connections, supports, and miscellaneous materials necessary to make items functional for use indicated.

B. Salvaged Items for Owner's Use: Salvage items for Owner's use and handle as follows:

1. Clean salvaged items.
2. Pack or crate items after cleaning. Identify contents of containers with label indicating elements, date of removal, quantity, and location where removed.
3. Store items in a secure area until delivery to Owner.
4. Transport items to Owner's storage area designated by Owner.
5. Protect items from damage during transport and storage.

C. Equipment: Drain tanks, piping, and fixtures. Seal openings with caps or plugs. Protect equipment from exposure to weather.

E. Plumbing Fixtures: Separate by type and size.

F. Lighting Fixtures: Separate lamps by type and protect from breakage.

G. Electrical Devices: Separate switches, receptacles, switchgear, transformers, meters, panelboards, circuit breakers, and other devices by type.

3.03 RECYCLING CONSTRUCTION WASTE, GENERAL

A. Provide appropriately marked containers or bins for controlling recyclable waste until they are removed from Project site. Include list of acceptable and unacceptable materials at each container and bin.

1. Inspect containers and bins for contamination and remove contaminated materials if found.

B. Stockpile processed materials on-site without intermixing with other materials. Place, grade, and shape stockpiles to drain surface water. Cover to prevent windblown dust.

C. Stockpile materials away from construction area. Do not store within drip line of remaining trees.

D. Store components off the ground and protect from the weather.

E. Remove recyclable waste off Owner's property and transport to recycling receiver or processor.

3.04 DISPOSAL OF WASTE

A. General: Remove waste materials from Project site and legally dispose of them in a landfill or incinerator acceptable to authorities having jurisdiction.

1. Except as otherwise specified, do not allow waste materials that are to be disposed of to accumulate on-site.
2. Remove and transport debris in a manner that will prevent spillage on adjacent surfaces and areas.

B. Burning: Do not burn waste materials.

C. Disposal: Transport waste materials off Owner's property and legally dispose of them.

END OF SECTION

PART 1 - GENERAL

1.01 RELATED DOCUMENTS

A. Drawings and general provisions of the Contract, including General and Supplementary Conditions and other Division 01 Specification Sections, apply to this Section.

1.02 SUMMARY

A. Section includes administrative and procedural requirements for contract closeout, including, but not limited to, the following:

1. Substantial Completion procedures.
2. Final completion procedures.
3. Warranties.
4. Final cleaning.
5. Repair of the Work.

B. Related Sections:

1. Division 01 Section 01 78 00 - Closeout Submittals for submitting Record Drawings, Record Specifications, and Record Product Data.
2. Divisions 02 through 33 Sections for specific closeout and special cleaning requirements for the Work in those Sections.

1.03 SUBMITTAL PROCEDURES

A. General Submittal Procedure Requirements:

1. Submit electronic submittals via email as PDF electronic files.
   a. Architect will return annotated file. Annotate and retain one copy of file as an electronic Project record document file.

B. Contractor's List of Incomplete Items: Initial submittal at Substantial Completion.

C. Certificates of Release: From authorities having jurisdiction.

1.04 SPECIAL TOOLS AND TEST EQUIPMENT

A. Special tools: Provide any special tools needed to perform repair and maintenance for each equipment item.

B. Test Equipment: Provide a detailed list of the test equipment needed to perform repair and maintenance for each equipment item. The list shall contain the special test equipment part number, size, quantity, manufacturer’s name and address, and local supplier’s name and address.

1.05 SUBSTANTIAL COMPLETION

A. Preliminary Procedures: Before requesting inspection for determining date of Substantial Completion, complete the following. List items below that are incomplete with request.

1. Prepare a list of items to be completed and corrected (punch list), the value of items on the list, and reasons why the Work is not complete.
2. Advise Owner of pending insurance changeover requirements.
3. Submit specific warranties, workmanship bonds, maintenance service agreements, final certifications, and similar documents.
4. Obtain and submit releases permitting Owner unrestricted use of the Work and access to services and utilities. Include occupancy permits, operating certificates, and similar releases.
5. Prepare and submit Project Record Documents, operation and maintenance manuals, final completion construction photographic documentation, damage or settlement surveys, property surveys, and similar final record information.
6. Deliver tools, spare parts, extra materials, and similar items to location designated by Owner. Label with manufacturer's name and model number where applicable.
7. Make final changeover of permanent locks and deliver keys to Owner. Advise Owner's personnel of changeover in security provisions.
8. Complete startup testing of systems.
9. Submit test/adjust/balance records.

10. Terminate and remove temporary facilities from Project site, along with mockups, construction tools, and similar elements.

11. Advise Owner of changeover in heat and other utilities.

12. Submit changeover information related to Owner's occupancy, use, operation, and maintenance.

13. Complete final cleaning requirements, including touchup painting.

14. Touch up and otherwise repair and restore marred exposed finishes to eliminate visual defects.

B. Inspection: Submit a written request for inspection for Substantial Completion. On receipt of request, Architect will either proceed with inspection or notify Contractor of unfulfilled requirements. Architect will prepare the Certificate of Substantial Completion after inspection or will notify Contractor of items, either on Contractor's list or additional items identified by Architect, that must be completed or corrected before certificate will be issued.

1. Reinspection: Request reinspection when the Work identified in previous inspections as incomplete is completed or corrected.

2. Results of completed inspection will form the basis of requirements for final completion.

1.06 FINAL COMPLETION

A. Preliminary Procedures: Before requesting final inspection for determining final completion, complete the following:

1. Submit a final Application for Payment according to Division 01 Section "Payment Procedures."

2. Submit certified copy of Architect's Substantial Completion inspection list of items to be completed or corrected (punch list), endorsed and dated by Architect. The certified copy of the list shall state that each item has been completed or otherwise resolved for acceptance.

3. Submit evidence of final, continuing insurance coverage complying with insurance requirements.

4. Submit pest-control final inspection report and warranty.

5. Instruct Owner's personnel in operation, adjustment, and maintenance of products, equipment, and systems. Submit demonstration and training video recordings.

B. Inspection: Submit a written request for final inspection for acceptance. On receipt of request, Architect will either proceed with inspection or notify Contractor of unfulfilled requirements. Architect will prepare a final Certificate for Payment after inspection or will notify Contractor of construction that must be completed or corrected before certificate will be issued.

1. Reinspection: Request reinspection when the Work identified in previous inspections as incomplete is completed or corrected.

1.07 LIST OF INCOMPLETE ITEMS (PUNCH LIST)

A. Organization of List: Include name and identification of each space and area affected by construction operations for incomplete items and items needing correction including, if necessary, areas disturbed by Contractor that are outside the limits of construction. Use CSI Form 14.1A.

1. Organize list of spaces in sequential order, starting with exterior areas first and proceeding from lowest floor to highest floor.

2. Organize items applying to each space by major element, including categories for ceiling, individual walls, floors, equipment, and building systems.

3. Submit list of incomplete items in the following format:

a. MS Excel electronic file. Architect will return annotated file.

1.08 WARRANTIES

A. Submittal Time: Submit written warranties on request of Architect for designated portions of the Work where commencement of warranties other than date of Substantial Completion is indicated.

B. Organize warranty documents into an orderly sequence based on the table of contents of the Project Manual.

1. Bind warranties and bonds in heavy-duty, 3-ring, vinyl-covered, loose-leaf binders, thickness as necessary to accommodate contents, and sized to receive 8-1/2-by-11-inch (215-by-280-mm) paper.

2. Provide heavy paper dividers with plastic-covered tabs for each separate warranty. Mark tab to identify the product or installation. Provide a typed description of the product or installation, including the name of the product and the name, address, and telephone number of Installer.

3. Identify each binder on the front and spine with the typed or printed title "WARRANTIES," Project name, and name of Contractor.

4. Scan warranties and bonds and assemble complete warranty and bond submittal package into a single indexed electronic PDF file with links enabling navigation to each item. Provide table of contents at beginning of document.

C. Provide additional copies of each warranty to include in operation and maintenance manuals.

PART 2 - PRODUCTS

2.01 MATERIALS

A. Cleaning Agents: Use cleaning materials and agents recommended by manufacturer or fabricator of the surface to be cleaned. Do not use cleaning agents that are potentially hazardous to health or property or that might damage finished surfaces.

1. Use cleaning products that comply with Green Seal's GS-37, or if GS-37 is not applicable, use products that comply with the California Code of Regulations maximum allowable VOC levels.

PART 3 - EXECUTION

3.01 FINAL CLEANING

A. General: Perform final cleaning. Conduct cleaning and waste-removal operations to comply with local laws and ordinances and Federal and local environmental and antipollution regulations.

B. Cleaning: Employ experienced workers or professional cleaners for final cleaning. Clean each surface or unit to condition expected in an average commercial building cleaning and maintenance program. Comply with manufacturer's written instructions.

1. Complete the following cleaning operations before requesting inspection for certification of Substantial Completion for entire Project or for a portion of Project:

a. Clean Project site, yard, and grounds, in areas disturbed by construction activities, including landscape development areas, of rubbish, waste material, litter, and other foreign substances.

b. Sweep paved areas broom clean. Remove petrochemical spills, stains, and other foreign deposits.

c. Rake grounds that are neither planted nor paved to a smooth, even-textured surface.

d. Remove tools, construction equipment, machinery, and surplus material from Project site.

e. Clean exposed exterior and interior hard-surfaced finishes to a dirt-free condition, free of stains, films, and similar foreign substances. Avoid disturbing natural weathering of exterior surfaces. Restore reflective surfaces to their original condition.

f. Remove debris and surface dust from limited access spaces, including roofs, plenums, shafts, trenches, equipment vaults, manholes, attics, and similar spaces.

g. Sweep concrete floors broom clean in unoccupied spaces.

h. Vacuum carpet and similar soft surfaces, removing debris and excess nap; clean according to manufacturer's recommendations if visible soil or stains remain.

i. Clean transparent materials, including mirrors and glass in doors and windows. Remove glazing compounds and other noticeable, vision-obscuring materials. Replace chipped or broken glass and other damaged transparent materials. Polish mirrors and glass, taking care not to scratch surfaces.

j. Remove labels that are not permanent.

k. Wipe surfaces of mechanical and electrical equipment, elevator equipment, and similar equipment. Remove excess lubrication, paint and mortar droppings, and other foreign substances.

l. Clean plumbing fixtures to a sanitary condition, free of stains, including stains resulting from water exposure.

m. Replace disposable air filters and clean permanent air filters. Clean exposed surfaces of diffusers, registers, and grills.

n. Clean ducts, blowers, and coils if units were operated without filters during construction or that display contamination with particulate matter on inspection.

1). Clean HVAC system in compliance with NADCA Standard 1992-01. Provide written report on completion of cleaning.

o. Clean light fixtures, lamps, globes, and reflectors to function with full efficiency.

p. Leave Project clean and ready for occupancy.

3.02 REPAIR OF THE WORK

A. Complete repair and restoration operations before requesting inspection for determination of Substantial Completion.

B. Repair or remove and replace defective construction. Repairing includes replacing defective parts, refinishing damaged surfaces, touching up with matching materials, and properly adjusting operating equipment. Where damaged or worn items cannot be repaired or restored, provide replacements. Remove and replace operating components that cannot be repaired. Restore damaged construction and permanent facilities used during construction to specified condition.

1. Remove and replace chipped, scratched, and broken glass, reflective surfaces, and other damaged transparent materials.

2. Touch up and otherwise repair and restore marred or exposed finishes and surfaces. Replace finishes and surfaces that that already show evidence of repair or restoration.

a. Do not paint over "UL" and other required labels and identification, including mechanical and electrical nameplates. Remove paint applied to required labels and identification.

3. Replace parts subject to operating conditions during construction that may impede operation or reduce longevity.

4. Replace burned-out bulbs, bulbs noticeably dimmed by hours of use, and defective and noisy starters in fluorescent and mercury vapor fixtures to comply with requirements for new fixtures.

END OF SECTION

DIVISION 01 - GENERAL REQUIREMENTS

CLOSEOUT SUBMITTALS SECTION 01 78 00

PART 1 - GENERAL

1.01 RELATED DOCUMENTS

A. Drawings and general provisions of the Contract, including General and Supplementary Conditions and other Division 01 Specification Sections, apply to this Section.

1.02 SECTION INCLUDES

A. Project Record Documents.

B. Operation and Maintenance Data.

C. Warranties and bonds.

1.03 RELATED REQUIREMENTS

A. Section 01 30 00 - Administrative Requirements: Submittals procedures, shop drawings, product data, and samples.

B. Section 01 77 00 - Closeout Procedures: Contract closeout procedures.

C. Individual Product Sections: Specific requirements for operation and maintenance data.

D. Individual Product Sections: Warranties required for specific products or Work.

1.04 SUBMITTALS

A. Project Record Documents: Submit documents to Architect with claim for final Application for Payment.

B. Operation and Maintenance Data:

1. Submit two copies of preliminary draft or proposed formats and outlines of contents before start of Work. Architect will review draft and return one copy with comments.

2. For equipment, or component parts of equipment put into service during construction and operated by Owner, submit completed documents within ten days after acceptance.

3. Submit one copy of completed documents 15 days prior to final inspection. This copy will be reviewed and returned after final inspection, with Architect comments. Revise content of all document sets as required prior to final submission.

4. Submit two sets of revised final documents plus digital copy in PDF format in final form within 10 days after final inspection.

C. Warranties and Bonds:

1. For equipment or component parts of equipment put into service during construction with Owner's permission, submit documents within 10 days after acceptance.

2. Make other submittals within 10 days after Date of Substantial Completion, prior to final Application for Payment.

3. For items of Work for which acceptance is delayed beyond Date of Substantial Completion, submit within 10 days after acceptance, listing the date of acceptance as the beginning of the warranty period.

PART 2 - PRODUCTS

NOT USED

PART 3 - EXECUTION

3.01 PROJECT RECORD DOCUMENTS

A. Maintain on site one set of the following record documents; record actual revisions to the Work:

1. Drawings.

2. Specifications.

3. Addenda.

4. Change Orders and other modifications to the Contract.

B. Ensure entries are complete and accurate, enabling future reference by Owner.

C. Store record documents separate from documents used for construction.

D. Record information concurrent with construction progress.

E. Specifications: Legibly mark and record at each product section description of actual products installed, including the following:

1. Manufacturer's name and product model and number.
2. Product substitutions or alternates utilized.
3. Changes made by Addenda and modifications.

F. Record Drawings: Legibly mark each item to record actual construction including:

1. Measured depths of foundations in relation to finish first floor datum.
2. Measured horizontal and vertical locations of underground utilities and appurtenances, referenced to permanent surface improvements.
3. Measured locations of internal utilities and appurtenances concealed in construction, referenced to visible and accessible features of the Work.
4. Field changes of dimension and detail.
5. Details not on original Contract drawings.

3.02 OPERATION AND MAINTENANCE DATA

A. For Each Product or System: List names, addresses and telephone numbers of Subcontractors and suppliers, including local source of supplies and replacement parts.

B. Product Data: Mark each sheet to clearly identify specific products and component parts, and data applicable to installation. Delete inapplicable information.

C. Drawings: Supplement product data to illustrate relations of component parts of equipment and systems, to show control and flow diagrams. Do not use Project Record Documents as maintenance drawings.

D. Typed Text: As required to supplement product data. Provide logical sequence of instructions for each procedure, incorporating manufacturer's instructions.

3.03 OPERATION AND MAINTENANCE DATA FOR MATERIALS AND FINISHES

A. For Each Product, Applied Material, and Finish:

B. Instructions for Care and Maintenance: Manufacturer's recommendations for cleaning agents and methods, precautions against detrimental cleaning agents and methods, and recommended schedule for cleaning and maintenance.

C. Additional information as specified in individual product specification sections.

3.04 OPERATION AND MAINTENANCE DATA FOR EQUIPMENT AND SYSTEMS

A. For Each Item of Equipment and Each System:

1. Description of unit or system, and component parts.
2. Identify function, normal operating characteristics, and limiting conditions.
3. Include performance curves, with engineering data and tests.
4. Complete nomenclature and model number of replaceable parts.

B. Panelboard Circuit Directories: Provide electrical service characteristics, controls, and communications; typed.

C. Operating Procedures: Include start-up, break-in, and routine normal operating instructions and sequences. Include regulation, control, stopping, shut-down, and emergency instructions. Include summer, winter, and any special operating instructions.

D. Maintenance Requirements: Include routine procedures and guide for preventative maintenance and troubleshooting; disassembly, repair, and reassembly instructions; and alignment, adjusting, balancing, and checking instructions.

E. Provide servicing and lubrication schedule, and list of lubricants required.

F. Include manufacturer's printed operation and maintenance instructions.

G. Include sequence of operation by controls manufacturer.

H. Provide original manufacturer's parts list, illustrations, assembly drawings, and diagrams required for maintenance.

I. Additional Requirements: As specified in individual product specification sections.

3.05 OPERATION AND MAINTENANCE MANUALS

A. Prepare instructions and data by personnel experienced in maintenance and operation of described products.

B. Prepare data in the form of an instructional manual.

C. Binders: Commercial quality, 8-1/2 by 11 inch three D side ring binders with durable plastic covers; 2 inch maximum ring size. When multiple binders are used, correlate data into related consistent groupings.

D. Cover: Identify each binder with typed or printed title OPERATION AND MAINTENANCE INSTRUCTIONS; identify title of Project; identify subject matter of contents.

E. Provide tabbed dividers for each separate product and system, with typed description of product and major component parts of equipment.

F. Drawings: Provide with reinforced punched binder tab. Bind in with text; fold larger drawings to size of text pages.

G. Contents: Prepare a Table of Contents for each volume, with each product or system description identified, in three parts as follows:

1. Part 1: Directory, listing names, addresses, and telephone numbers of Architect, Contractor, Subcontractors, and major equipment suppliers.

2. Part 2: Operation and maintenance instructions arranged by system and subdivided by specification section. For each category, identify names, addresses, and telephone numbers of Subcontractors and suppliers. Identify the following:

   a. Significant design criteria.

   b. List of equipment.

   c. Parts list for each component.

   d. Operating instructions.

   e. Maintenance instructions for equipment and systems.

   f. Maintenance instructions for special finishes, including recommended cleaning methods and materials, and special precautions identifying detrimental agents.

3. Part 3: Project documents and certificates, including the following:

   a. Shop drawings and product data.

   b. Certificates.

   c. Photocopies of warranties and bonds.

3.06 WARRANTIES AND BONDS

A. Obtain warranties and bonds, executed in duplicate by responsible Subcontractors, suppliers, and manufacturers, within 10 days after completion of the applicable item of work. Except for items put into use with Owner's permission, leave date of beginning of time of warranty until the Date of Substantial completion is determined.

B. Verify that documents are in proper form, contain full information, and are notarized.

C. Co-execute submittals when required.

D. Retain warranties and bonds until time specified for submittal.

E. Manual: Bind in commercial quality 8-1/2 by 11 inch three D side ring binders with durable plastic covers.

F. Cover: Identify each binder with typed or printed title WARRANTIES AND BONDS, with title of Project; name, address and telephone number of Contractor and equipment supplier; and name of responsible company principal.

G. Table of Contents: Neatly typed, in the sequence of the Table of Contents of the Project Manual, with each item identified with the number and title of the specification section in which specified, and the name of product or work item.

H. Separate each warranty or bond with index tab sheets keyed to the Table of Contents listing. Provide full information, using separate typed sheets as necessary. List Subcontractor, supplier, and manufacturer, with name, address, and telephone number of responsible principal.

END OF SECTION

PART 1 - GENERAL

1.01 RELATED DOCUMENTS

A. Drawings and general provisions of the Contract, including General and Supplementary Conditions and other Division 01 Specification Sections, apply to this Section.

1.02 SUMMARY

A. Demonstration of products and systems to be commissioned and where indicated in specific specification sections.

B. Training of Owner personnel in operation and maintenance is required for:

1. HVAC systems and equipment.
2. Plumbing equipment.
3. Electrical systems and equipment.
4. Items specified in individual product Sections.

C. Training of Owner personnel in care, cleaning, maintenance, and repair is required for:

1. Roofing, waterproofing, and other weather-exposed or moisture protection products.
2. Finishes, including flooring, wall finishes, and ceiling finishes.
3. Fixtures and fittings.
4. Items specified in individual product Sections.

1.03 RELATED REQUIREMENTS

A. Section 01 78 00 -Closeout Submittals: Operation and maintenance manuals.

B. Other Specification Sections: Additional requirements for demonstration and training.

1.04 SUBMITTALS

A. See Section 01 25 00 - Submittal Procedures.

B. Training Plan: Owner will designate personnel to be trained; tailor training to needs and skill-level of attendees.

1. Submit to Architect for transmittal to Owner.
2. Submit not less than four weeks prior to start of training.
3. Revise and resubmit until acceptable.
4. Provide an overall schedule showing all training sessions.
5. Include at least the following for each training session:
    a. Identification, date, time, and duration.
    b. Description of products and/or systems to be covered.
    c. Name of firm and person conducting training; include qualifications.
    d. Intended audience, such as job description.
    e. Objectives of training and suggested methods of ensuring adequate training.
    f. Methods to be used, such as classroom lecture, live demonstrations, hands-on, etc.
    g. Training equipment required, such as projector, projection screen, etc., to be provided by Contractor.

1.05 QUALITY ASSURANCE

A. Instructor Qualifications: Familiar with design, operation, maintenance and troubleshooting of the relevant products and systems.

1. Provide as instructors the most qualified trainer of those contractors and/or installers who actually supplied and installed the systems and equipment.
2. Where a single person is not familiar with all aspects, provide specialists with necessary qualifications.

1.06 COORDINATION

A. Coordinate instruction schedule with Owner's operations. Adjust schedule as required to minimize

disrupting Owner's operations and to ensure availability of Owner's personnel.

B. Coordinate instructors, including providing notification of dates, times, length of instruction time, and course content.

C. Coordinate content of training modules with content of approved emergency, operation, and maintenance manuals. Do not submit instruction program until operation and maintenance data has been reviewed and approved by Architect.

PART 2 - PRODUCTS

2.01 INSTRUCTION PROGRAM

A. Program Structure: Develop an instruction program that includes individual training modules for each system and for equipment not part of a system, as required by individual Specification Sections.

B. Training Modules: Develop a learning objective and teaching outline for each module. Include a description of specific skills and knowledge that participant is expected to master. For each module, include instruction for the following as applicable to the system, equipment, or component:

1. Basis of System Design, Operational Requirements, and Criteria: Include the following:
    a. System, subsystem, and equipment descriptions.
    b. Performance and design criteria if Contractor is delegated design responsibility.
    c. Operating standards.
    d. Regulatory requirements.
    e. Equipment function.
    f. Operating characteristics.
    g. Limiting conditions.
    h. Performance curves.
2. Documentation: Review the following items in detail:
    a. Emergency manuals.
    b. Operations manuals.
    c. Maintenance manuals.
    d. Project record documents.
    e. Identification systems.
    f. Warranties and bonds.
    g. Maintenance service agreements and similar continuing commitments.
3. Emergencies: Include the following, as applicable:
    a. Instructions on meaning of warnings, trouble indications, and error messages.
    b. Instructions on stopping.
    c. Shutdown instructions for each type of emergency.
    d. Operating instructions for conditions outside of normal operating limits.
    e. Sequences for electric or electronic systems.
    f. Special operating instructions and procedures.
4. Operations: Include the following, as applicable:
    a. Startup procedures.
    b. Equipment or system break-in procedures.
    c. Routine and normal operating instructions.
    d. Regulation and control procedures.
    e. Control sequences.
    f. Safety procedures.
    g. Instructions on stopping.
    h. Normal shutdown instructions.
    i. Operating procedures for emergencies.
    j. Operating procedures for system, subsystem, or equipment failure.

k. Seasonal and weekend operating instructions.

l. Required sequences for electric or electronic systems.

m. Special operating instructions and procedures.

5. Adjustments: Include the following:

a. Alignments.

b. Checking adjustments.

c. Noise and vibration adjustments.

d. Economy and efficiency adjustments.

6. Troubleshooting: Include the following:

a. Diagnostic instructions.

b. Test and inspection procedures.

7. Maintenance: Include the following:

a. Inspection procedures.

b. Types of cleaning agents to be used and methods of cleaning.

c. List of cleaning agents and methods of cleaning detrimental to product.

d. Procedures for routine cleaning

e. Procedures for preventive maintenance.

f. Procedures for routine maintenance.

g. Instruction on use of special tools.

8. Repairs: Include the following:

a. Diagnosis instructions.

b. Repair instructions.

c. Disassembly; component removal, repair, and replacement; and reassembly instructions.

d. Instructions for identifying parts and components.

e. Review of spare parts needed for operation and maintenance.

PART 3 - EXECUTION

3.01 DEMONSTRATION - GENERAL

A. Demonstrations conducted during system start-up do not qualify as demonstrations for the purposes of this section, unless approved in advance by Owner.

B. Demonstration may be combined with Owner personnel training if applicable.

C. Operating Equipment and Systems: Demonstrate operation in all modes, including start-up, shut-down, seasonal changeover, emergency conditions, and troubleshooting, and maintenance procedures, including scheduled and preventive maintenance.

1. Perform demonstrations not less than two weeks prior to Substantial Completion.

2. For equipment or systems requiring seasonal operation, perform demonstration for other season within six months.

D. Non-Operating Products: Demonstrate cleaning, scheduled and preventive maintenance, and repair procedures.

1. Perform demonstrations not less than two weeks prior to Substantial Completion.

3.02 TRAINING - GENERAL

A. Conduct training on-site unless otherwise indicated.

B. Owner will provide classroom and seating at no cost to Contractor.

C. Provide training in minimum two hour segments.

D. Training schedule will be subject to availability of Owner's personnel to be trained; re-schedule training sessions as required by Owner; once schedule has been approved by Owner failure to conduct sessions according to schedule will be cause for Owner to charge Contractor for personnel "show-up" time.

E. Review of Facility Policy on Operation and Maintenance Data: During training discuss:

1. The location of the O&M manuals and procedures for use and preservation; backup copies.

2. Typical contents and organization of all manuals, including explanatory information, system narratives, and product specific information.

3. Typical uses of the O&M manuals.

F. Product-and System-Specific Training:

1. Review the applicable O&M manuals.

2. For systems, provide an overview of system operation, design parameters and constraints, and operational strategies.

3. Review instructions for proper operation in all modes, including start-up, shut-down, seasonal changeover and emergency procedures, and for maintenance, including preventative maintenance.

4. Provide hands-on training on all operational modes possible and preventive maintenance.

5. Emphasize safe and proper operating requirements; discuss relevant health and safety issues and emergency procedures.

6. Discuss common troubleshooting problems and solutions.

7. Discuss any peculiarities of equipment installation or operation.

8. Discuss warranties and guarantees, including procedures necessary to avoid voiding coverage.

9. Review recommended tools and spare parts inventory suggestions of manufacturers.

10. Review spare parts and tools required to be furnished by Contractor.

11. Review spare parts suppliers and sources and procurement procedures.

END OF SECTION

PART 1 - GENERAL

1.01 RELATED DOCUMENTS

A. Drawings and general provisions of the Contract, including General and Supplementary Conditions and Division 01 Specification Sections, apply to this Section.

1.02 GENERAL

A. The subsoil investigation report bound herein is furnished by the owner to the architect and has been prepared by an independent geotechnical engineer directly employed by the owner. This section provides information resulting from subsurface investigations completed at the site as part of this project. This section may contain information applicable to ALL site work, and other technical specification sections, as well. All Contractors are expected to review this information as part of their duties to familiarize themselves with the site. At Contractor's option, additional subsurface investigation can be performed at their own expense.

B. The architect specifically disclaims any responsibility for the accuracy of the soils investigation, the subsoil investigation report and interpretation of the data. This report was prepared for design purposes only and it is not a warranty of subsurface conditions.

C. The subsoil investigation report is bound within these specifications in an advisory capacity only for the specific purpose of ensuring that the contractor is made aware of the best known available subsurface data at the project site. In its advisory capacity, the subsoil investigation report shall not be deemed to be a part of the bidding requirements, contract for construction or the contract documents.

1.03 SOIL BORING DATA

A. The geotechnical report and soil boring logs are attached with this section.

PART 2 - PRODUCTS

NOT USED

PART 3 - EXECUTION

NOT USED

END OF SECTION

BURGESS ENGINEERING AND TESTING

April 21, 2022

Kingfisher County
C/O: Architects in Partnership
3220 Marshall Avenue
Norman, OK 73072

Attention: Heath Dobrovolny
District 3 Commissioner

Re: Report of Subsurface Exploration and
Foundation Recommendations for
Addition to Hennessey Fire Station
Hennessey, Oklahoma
Project No.: 731-22078

Dear Mr. Dobrovolny:

Burgess Engineering and Testing (BET) is pleased to submit this report of subsurface exploration for the above referenced project. Contained in this presentation are the results of the exploration and recommendations concerning the design and construction of the foundations and general site development.

We appreciate the opportunity to have provided you with our geotechnical engineering services and look forward to working with you during the construction phase of this project. If you have any questions concerning this report or if we may be of further service in any manner please contact our office.

Respectfully,
Burgess Engineering and Testing

Dustin Freeman, E.I.
Geotechnical Engineer Intern

LICENSED PROFESSIONAL ENGINEER
ALI HONARNMAND-EBRAHIMI
16029
OKLAHOMA

Aji H. Ebrahimi, Ph.D., P.E.
Manager

DF/jg

REPORT OF SUBSURFACE EXPLORATION
AND FOUNDATION RECOMMENDATIONS

ADDITION TO HENNESSEY FIRE STATION
HENNESSEY, OKLAHOMA
PROJECT NO.: 731-22078

PREPARED FOR

KINGFISHER COUNTY
C/O: ARCHITECTS IN PARTNERSHIP
3220 MARSHALL AVENUE
NORMAN, OK 73072

APRIL 21, 2022

BY

BURGESS ENGINEERING AND TESTING
809 NW 34TH STREET
MOORE, OKLAHOMA 73160

TABLE OF CONTENTS

1.0 INTRODUCTION AND RECOMMENDATION SUMMARY 1
1.1 Project Authorization 1
1.2 Recommendation Summary 1

2.0 TESTING PROCEDURES 2
2.1 Field Operations 2
2.2 Laboratory Testing 3

3.0 SITE AND SUBSURFACE CONDITION 4
3.1 Site Description and Subsurface Conditions 4
3.2 Ground Water Conditions 4

4.0 STRUCTURAL INFORMATION 4

5.0 FOUNDATION RECOMMENDATIONS 5
5.1 Discussion 5
5.2 Conventional Spread and Continuous Wall Footings 6
5.3 Conventional Floor Slab 7
5.4 Seismic Information 7

6.0 CONSTRUCTION CONSIDERATIONS 7
6.1 Site Preparation and Fill Requirements 7
6.2 Stabilization Agent 8
6.3 Excavations 9
6.4 Drainage 9
6.5 Weather Considerations 9

7.0 GENERAL COMMENTS 9

APPENDIX

A. Boring Location Diagram
General Notes
Boring Logs

B. Laboratory Test Results
Geological statement

1.0 INTRODUCTION AND RECOMMENDATION SUMMARY

1.1 Project Authorization

Burgess Engineering and Testing has completed a subsurface exploration and evaluation of foundation conditions for the Addition to Hennessey Fire Station, located at 501 S. Main St., in Hennessey, Oklahoma. The work was authorized by Mr. Heath Dobrovolny, District 3 Commissioner for Kingfisher County, and was performed in accordance with the BET proposal number 22133.

The purpose of this study was to explore the subsurface conditions at the site to facilitate the evaluation of possible foundation systems for the proposed project. This report briefly outlines the testing procedures, describes the site and subsurface conditions, and discusses the foundation recommendations.

The scope of services did not include any environmental assessment for the presence or absence of wetlands or hazardous or toxic materials in the soil, surface water, ground water, or air, on or below or around this site. Any statements in this report or on the boring logs regarding odors, colors, unusual or suspicious items or conditions are strictly for the information of the client.

1.2 Recommendation Summary

As requested, two (2), fifteen (15) feet deep test borings (B1 and B2) were drilled in the building addition area, at locations specified by the client. However, test boring B2 was moved five (5) feet west in order to avoid drilling through the existing pavement. Results from the test borings indicate the presence of medium plastic sandy lean clay, lean clay with sand, and clayey sand at the site. No bedrock was encountered within the extent of test borings. Water level observations were made during the boring operations and are noted on the Log of Borings. At the completion of drilling all test borings were dry. A detailed report of the subsurface conditions is presented in the attached Appendix "A" on the log of boring. Conditions that might affect the construction of the proposed facility include:

1. In order to minimize the differential settlement, the footings are recommended to be supported on similar material.
2. The proposed project is an addition to the existing building. As the result, special attention must be given in designing of the foundation for the addition adjacent to the existing facility. It is advisable to place the foundations for the addition at the same level as the foundations of the existing building so that stresses applied by the new footings will not be transferred to the existing foundations. Construction joints should be provided between the existing building and the addition.
3. Based on the field exploration and review of the historical aerial photos, it appears that part of the new building will be constructed over a demolished building. Although, construction debris was not encountered during the subsurface exploration, the excavation at the site during the construction

phase may encounter basement, old foundation or septic tanks. If these structures are encountered, they should be removed and backfilled with structural fill materials. The structural fill materials should be compacted to ninety-right (98) percent of the maximum density as determined by Standard Proctor test in the building foot print areas, or ninety-five (95) percent of the maximum dry density as determined by Standard Proctor test in the other areas.

The recommended foundation systems for the proposed project are spread footings for building's columns and continuous footings for walls with conventional floor slabs. The recommended bearing capacities for the foundation systems are presented in the following table:

Foundation Type	Bearing Capacity Recommendation	Estimated Settlement
Spread Footings Supported on Properly Prepared Existing Soil	1,750 psf	1 inch
Continuous Footings Supported on Properly Prepared Existing Soil	1,250 psf	1 inch

Detailed analyses of subsurface conditions, and pertinent design recommendations for the construction of foundations are included herein. The final decision regarding which foundation type will be used should be based on the design parameters given, cost, risk of foundation movement, and other factors beyond the scope of this study.

Burgess Engineering and Testing cannot be responsible for the interpretation or implementation of this report by others. Burgess Engineering and Testing should be retained to perform services sufficient to determine compliance with its recommendations. If Burgess Engineering and Testing is not so retained, it will not accept any responsibility for the difficulties encountered during the construction or performance of the structure.

2.0 TESTING PROCEDURES

2.1 Field Operations

As requested, two (2), fifteen (15) feet deep test borings (B1 and B2) were drilled in the building addition area, at locations specified by the client. However, test boring B2 was moved five (5) feet west in order to avoid drilling through the existing pavement. Borings' locations are presented on the attached Boring Location Diagram presented in Appendix "A." The test borings were located and drilled in field by BET personnel by measuring distances from known reference points. The elevations of the test borings will be determined by others during the design phase of the project.

The borings were advanced into the ground using hollow stem augers. At regular intervals throughout the boring depths, soil samples were obtained with a 1.4 inch I.D., and 2.0 inch O.D., split spoon sampler. When using the split spoon sampler, the sampler was first seated six (6) inches to penetrate any loose cuttings and then driven an additional foot with blows from a 140-pound hammer falling (30) inches. The number of hammer blows required to drive the sampler each six (6) inch increments are recorded in the field.

The penetration resistance, "N-value," is designated as the number of hammer blows required to drive the sampler the final one (1) foot. When properly evaluated, it is an indication of relative density for sands and to a lesser degree an index to cohesion for clays. The split spoon sampling procedures used during this exploration are in basic accordance with ASTM Designation D 1586. Split spoon samples are suitable for visual examination and classification tests, but generally are not sufficiently intact for quantitative laboratory Testing.

Records of subsurface exploration (Logs of Boring) containing soil descriptions, stratifications, penetration resistance, locations of the split spoon, and ground water levels are presented in Appendix "A." The stratifications shown on the boring logs represent the soil conditions at the actual boring locations. Variations may occur between borings. Lines of demarcation represent the approximate boundary between the soil types; however, the transition may be gradual.

2.2 Laboratory Testing

The soil samples obtained during the field exploration were transported to the laboratory and examined by a soil engineer. By visual inspection soil samples were approximately classified using the Unified Soil Classifications System (USCS).

Laboratory tests were performed on representative samples of the subsurface soils in substantial accordance with the applicable ASTM Designations or with other commonly accepted laboratory practice. The laboratory testing schedule included determination of the soils' natural moisture contents (ASTM D2216), Atterberg limit values (ASTM D4318), and grain size distributions (ASTM D421 and ASTM D422). These test results are presented in Appendix "B."

Samples not altered by laboratory testing will be retained at our office for sixty (60) days from the date of this report and then discarded unless we are otherwise instructed.

3.0 SITE AND SUBSURFACE CONDITION

3.1 Site Description and Subsurface Conditions

The proposed project is located at 501 S. Main St., in Hennessey, Oklahoma. The surrounding area is developed with commercial and residential buildings. At the time of field exploration, our truck-mounted drilling rig encountered no difficulty moving about the site.

The subsurface conditions encountered at each boring location are indicated on the Log of Boring in Appendix "A." The stratification boundaries shown on the Log of Boring represent the approximate location of changes in geological material. The transition between material types may be gradual. For detailed information regarding test results at specific depths refer to Log of Boring and Summary of Laboratory Test Results in Appendices "A" and "B," respectively.

3.2 Ground Water Conditions

Water level observations were made during the field operations and are noted on the Log of Borings. At the completion of drilling, no groundwater was encountered within the test borings.

In relatively impervious soils, the accurate determination of the groundwater elevation may not be possible even after several days of observation. However, in relatively pervious soils, such as sandy soils, the indicated elevations are considered reliable groundwater levels. Seasonal variations, temperature and recent rainfall conditions may influence the levels of the groundwater table and volumes of water will depend on the permeability of the soils.

4.0 STRUCTURAL INFORMATION

Limited structural information is available to us at this time. Based on the information provided by Ms. May Sherman and Mr. Gang Li of Architects in Partnership, the proposed project will be constructing a new building addition for the existing Fire Department building, located at 501 S. Main St., in Hennessey, Oklahoma. Relatively light structural loading is anticipated for the project.

Since a detailed grading plan has not been furnished, the amount of cuts and fills in the building's area is assumed to be limited to two (2) feet, to achieve the final grades. If the initial design parameters should change or be in error, it should be brought to our attention so that we may review the applicability of the recommendations made in this report.

5.0 FOUNDATION RECOMMENDATIONS

5.1 Discussion

The bearing capacities of the existing soils were evaluated based on the results of Standard Penetration Tests (SPT), Atterberg limit tests, and Unified Soil Classifications System (USCS). These test results suggest that the existing soils have low bearing capacity with respect to shear strength and medium expansion and shrinkage potential. In order to minimize the differential settlement, the footings are recommended to be supported on similar material. The proposed project is an addition to the existing building. As the result, special attention must be given in designing of the foundation for the addition adjacent to the existing facility. It is advisable to place the foundations for the addition at the same level as the foundations of the existing building so that stresses applied by the new footings will not be transferred to the existing foundations. Construction joints should be provided between the existing building and the addition. Based on the field exploration and review of the historical aerial photos, it appears that part of the new building will be constructed over a demolished building. Although, construction debris was not encountered during the subsurface exploration, the excavation at the site during the construction phase may encounter basement, old foundation or septic tanks. If these structures are encountered, they should be removed and backfilled with structural fill materials. The structural fill materials should be compacted to ninety-right (98) percent of the maximum density as determined by Standard Proctor test in the building foot print areas, or ninety-five (95) percent of the maximum dry density as determined by Standard Proctor test in the other areas.

The geologic materials at the site can be classified as **Terrace Deposits (Qts)** overlaying **Hennessey Unit (Phy)** based on the Engineering Classification of Geological Materials for Kingfisher County, Division Four. Terrace Deposits (Qts) "consist of sand, silt, clay, gravel, and/or mixtures of these. Terrace materials occur adjacent to or near streams at higher elevations than the flood plain (bottom land). Like alluvium, these deposits are not all shown on the geologic unit maps." Hennessey Unit (Phy) "consists of red platy to blocky clay shales and mudstone. The mudstones are hard and appear blocky. The red clay shale of the Hennessey unit is characterized by numerous bands or streaks of white or light green color ranging from a few inches to four feet in thickness." Detail geological statements of the **Terrace Deposits (Qts)** and **Hennessey Unit (Phy)** are presented in Appendix "B."

The recommended foundation systems for the proposed project are spread footings for building's columns and continuous footings for walls with conventional floor slabs. The final selection of foundation type and depth should be based on the following criteria:

(1) The soils' properties including the strength properties, the expansive characteristics, and the settlement potential of subsurface materials; (2) the magnitude of structural loads; and (3) the design and economics. In the following sections, each recommended foundation system, is addressed with respect to the above criteria.

5.2 Conventional Spread and Continuous Wall Footings

The subsurface conditions encountered in the borings for the proposed project are adequate for shallow foundation. Spread footings for building columns and continuous footings for walls supported on properly prepared existing soil should be designed for maximum net allowable soil bearing pressures of 1,750 psf and 1,250 psf, respectively, based on dead loads plus design lives loads.

The settlement is expected to be limited to less than one (1) inch. The maximum differential settlement should be less than 0.5 inches. Minimum foundation widths for column footings should be twenty-four (24) inches and eighteen (18) inches for strip footings, despite any reduction in bearing pressure. The bottom of all footings and grade walls should be placed at least twenty-four (24) inches below the lowest adjacent final outside grades to resist frost penetration. To reduce any differential settlement, it is imperative to ensure that all the shallow foundations are constructed on similar materials.

The properties in the following table may be used to determine the sliding coefficient and lateral pressure at the footings and concrete interface.

Soil Parameters	Existing Soil
Wet Unit Weight (pcf)	110
Internal Friction Angle (φ)	17°
K_0	0.70
K_a	0.54
K_p	1.82
Interface Materials Friction Factor	0.30

Where K_o= Coefficient of at-rest earth pressure
K_a= Coefficient of active earth pressure
K_p= Coefficient of passive earth pressure

A safety factor of one and one half (1.5) should be used against foundation sliding

Unsuitable bearing material when encountered in the foundation excavation should be removed and replaced with concrete (compressive strength of at least 1,000 psi). Extreme care should be taken to prevent the weakening of the foundation bearing materials due to prolonged atmospheric exposure, construction activity disturbance, or an increase in moisture content. To reduce the effect of differential movement that

may occur due to variations in properties of supporting soils or in seasonal moisture contents, it is recommended that all continuous footings be suitably reinforced.

5.3 Conventional Floor Slab

A floor slab supported on properly prepared existing soil may be used for the proposed facility. Proof-rolling and visual inspection, as discussed later in this report, may be required to aid in identifying any soils that should be removed from the slab areas before slab construction.

The floor slab should be constructed on a compacted six-inch thick aggregate base placed on top of the existing soils. These aggregate base materials should be gravel, free of sharp corners or edges, natural stone, washed, free of clay, shale, organic matter, and with 1/4 inch minimum size, and 5/8 inch maximum size. Burgess Engineering and Testing recommends the placement of a vapor barrier of polyethylene sheeting. The location of the vapor barrier should be determined in accordance with the flow chart presented in ACI committee report 302.1R-15 or other current ACI reports. Adequate reinforcement and construction joints should be provided to limit cracking of the floor slab resulting from any differential movement or shrinkage. Where practical, the floor slab should not be rigidly connected to columns, walls, or foundations. Furthermore, consideration should be given to providing movement flexibility in the utility system of the structure. Proof-rolling and visual inspection, as discussed later in this report, may be required to aid in identifying any soils that should be removed from the slab areas before fill placement and/or floor slab construction.

5.4 Seismic Information

Based on the International Building Code (IBC 2018), the site is classified as Site Class C. There is no slope instability, liquefaction, or surface displacements associated with faulting or seismically induced lateral flow. According to USGS for ground shaking intensity, the Modified mercalli Intensity for the area in question is within zone V or greater. The area is not subject to the New Madrid Fault Line.

6.0 CONSTRUCTION CONSIDERATIONS

6.1 Site Preparation and Fill Requirements

For footings construction, we recommend that all topsoil, vegetation, roots, pavement and any soft soils in the building area be stripped from the site and either wasted or stockpiled for later use in landscaping. Utilities should be located and rerouted as necessary.

After stripping, undercutting and before fill placement, the buildings' area should be proof-rolled with a moderately heavy loaded pneumatic-tired vehicle such as a twenty (20) to twenty-five (25) ton dump truck or scraper. Soils that are observed to rut or deflect excessively under the moving loads should be

undercut and replaced with properly compacted fills. All proof-rolling and undercutting activities should be witnessed by the Burgess Engineering and Testing and should be performed during a period of dry weather.

After stripping, excavating, and proof-rolling but before placing the fill, the exposed soils should be scarified and then processed at an optimum moisture content within the range of three (3) percentage points above as determined by the Standard Proctor test. The subgrade soils should be recompacted to a dry density of at least ninety-five (95) percent of the Standard Proctor maximum dry density for a depth of at least six (6) inches below the surface.

After subgrade preparation and inspection have been completed, fill placement may begin. Structural fill materials used should be free of organic or other deleterious matters, have a maximum particle size of three (3) inches, and have a liquid limit less than thirty-five (35) and a plasticity index between five (5) and fifteen (15) and consist of sandy clays or clayey sands. Relatively clean sands are not recommended for use as structural fill in the building area. Fine grained (silt or clay) soil used for the fill will require very close moisture content control to achieve the recommended degree of compaction. The fill should be placed in maximum lifts of nine (9) inches of loose material and should be compacted within the range of three (3) percentage below and three (3) percentage points above the optimum moisture content value as determined by the Standard Proctor test. Added water should be uniformly applied and thoroughly mixed into the soil by disking or scarifying. Fine-grained structural fills should be compacted to at least ninety-eight (98) percent of the soils Standard Proctor maximum dry density as determined by ASTM Designation D698 in building areas. For all other areas, fine-grained structural fills should be compacted to at least ninety-five (95) percent of the soils Standard Proctor maximum dry density as determined by ASTM Designation D698

Each lift of compacted soil should be tested and approved by the Burgess Engineering and Testing prior to placement of subsequent lifts. As a guideline, it is recommended that field density tests be taken at a frequency of not less than one test per 1,000 square feet of surface area per lift of the fill in the building area. And at a frequency of not less than one test per 5,000 square feet of surface area per lift of the fill in the pavement area.

6.2 Stabilization Agent

A proper mix design should be determined prior to any soil stabilization. The mix design should also include testing the soil samples for soluble sulfates according to OHD L-49 to ensure the compatibility between the soil and the stabilizing agent.

6.3 Excavations

After excavating, footings should be inspected and concrete placed as quickly as possible to avoid exposure of the footing bottoms to wetting and drying. If it is required that footing excavations be left open for more than one (1) day, they should be protected to reduce evaporation or entry of soil moisture. Adequate protection against sloughing of soil should be provided for workers and inspectors entering the footing excavations and undercut areas. This protection should meet the requirements of OSHA and applicable building codes.

6.4 Drainage

Water should not be allowed to collect near the foundations or floor slab areas of the buildings either during or after construction. Undercut or excavated areas should be sloping toward one corner to facilitate removal of any collected ground water or surface run-off. Proper drainage should be provided by sloping the ground surface away from the structures. Splash blocks may be helpful in directing water away from the foundations.

6.5 Weather Considerations

The upper fine-grained soils encountered at this site are expected to be relatively sensitive to disturbances caused by construction traffic and to changes in moisture content. During wet weather periods, increases in the moisture content of the soil can cause significant reduction in the soil strength and support capabilities. In addition, soils that become wet may be slow to dry and thus significantly retard the progress of grading and compaction activities. It will, therefore, be advantageous to perform earthwork and foundation construction activities during dry weather. Earthwork activities performed during wetter months will be more problematic than if performed during warmer, drier climatic periods.

7.0 GENERAL COMMENTS

The exploration and analysis of the foundations conditions reported herein are considered in sufficient detail and scope to form a reasonable basis for the foundation design. The recommendations submitted are based on the available soil information and preliminary design details furnished by Ms. May Sherman and Mr. Gang Li of Architects in Partnership, for the proposed project. Burgess Engineering and Testing should be retained to review the final design plans and specifications so comments can be made regarding interpretation and implementation of our geotechnical recommendations in the design and specifications. Burgess Engineering and Testing should also be retained to provide testing and observation during excavation, grading, foundation and construction phases of the project. Any revision of the plans for the proposed facility from those enumerated in this report should be brought to the attention of our

geotechnical engineer in writing so that he may determine if changes in the foundation recommendations are required. If deviations from the noted subsurface conditions are encountered during construction, they should also be brought to the attention of the geotechnical engineer.

Burgess Engineering and Testing cannot be responsible for the interpretation or implementation of this report by others. Burgess Engineering and Testing should be retained to perform services sufficient to determine compliance with its recommendations. If Burgess Engineering and Testing is not so retained, it will not accept any responsibility. The geotechnical engineer warrants that the findings, recommendations, specifications, or professional advice contained herein have been made after being prepared according to the generally accepted professional engineering practice in the fields of foundation and pavement engineering, soil mechanics, and engineering geology. No other warranties are implied or expressed. After the plans and specifications are complete, it is recommended that the geotechnical engineer be provided the opportunity to review the final design and specifications so that earthwork and foundation recommendations may be properly interpreted and implemented. At this time, it may be necessary to submit supplementary recommendations.

This report has been prepared for the exclusive use of Kingfisher County and Architects in partnership, for the specific application to the Addition to Hennessey Fire Station, located at 501 S. Main St., in Hennessey, Oklahoma.

Respectfully,
Burgess Engineering and Testing

Dustin Freeman, E.I.
Geotechnical Engineer Intern



Ali H. Ebrahimi, Ph.D., P.E.
Manager

DF/jg

APPENDIX A

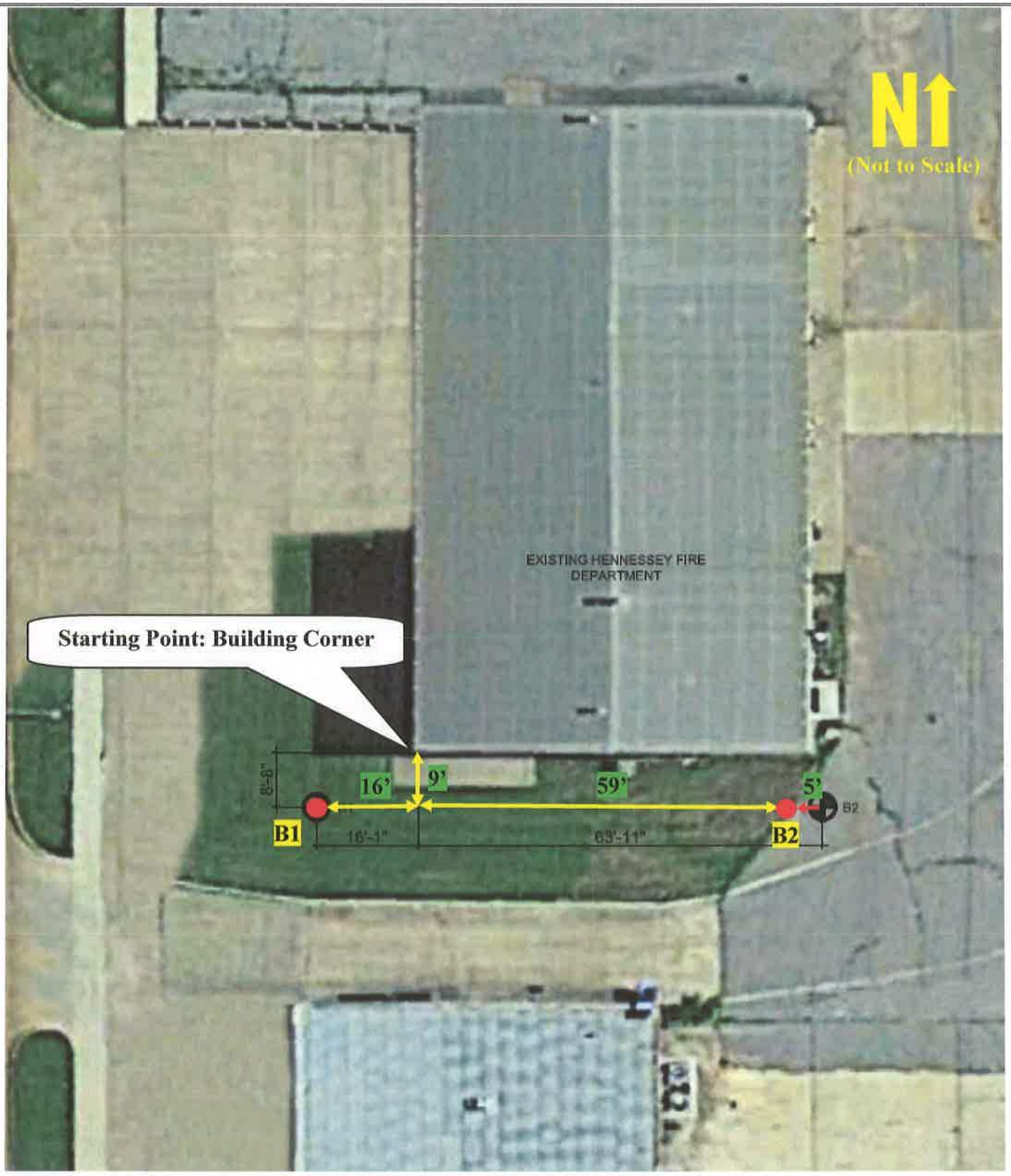

BORING LOCATION DIAGRAM **BET PROJECT NUMBER: 731-22078**	ADDITION TO HENNESSEY FIRE STATION HENNESSEY, OKLAHOMA
	BURGESS ENGINEERING AND TESTING

GENERAL NOTES

DRILLING AND SAMPLING SYMBOLS

AB: After Boring	RB: Rock Bit
ACR: After Cassing Removal	SS: Split Spoon 1 3/8" I.D., 2" OD
AS: Auger Sample	SH: California Sampler
BCR: Before Cassing Removal	ST: Shelby Tube 3" O.D.
CB: Carbide Bit	TC: Texas Cone 3"
DB: Diamond Bit	WB: Wash Boring
DCI: Dry Cave In	WCI: Wet Cave In
HA: Hand Auger	WD: While Drilling
HS: Hollow Stem Auger	WS: Washed Sample
PA: Power Auger	WS: Washed Sample

RELATIVE DENSITY OF COHESIONLESS (SANDY & SILTY) SOILS

DESCRIPTION	SPLIT SPOON "N" BLOWS PER FOOT
Very Loose	0- 4
Loose	4-10
Medium Dense	10-30
Dense	30-50
Very Dense	>50

CONSISTENCY OF COHESIVE (CLAYEY) SOILS

DESCRIPTION	UNCONFINED COMPRESSION, PSF	PLASTICITY INDEX (PI)	DESCRIPTION
Very Soft	0-500	0	Non plastic
Soft	500-1,000	1-5	Slightly plastic
Medium Stiff	1,000-2,000	5-10	Low plasticity
Stiff	2,000-4,000	10-20	Medium plasticity
Very Stiff	4,000-8,000	20-40	High plasticity
Hard	>8,000	>40	Very high plasticity

ROCK STRENGTH CLASSIFICATION

DESCRIPTION	APPROX. RANGE OF UNIAXIAL COMPRESSIVE STRENGTH, PSF
Extremely weak rock	8,000-20,000
Very weak rock	20,000-100,000
Weak rock	100,000-500,000
Medium strong rock	500,000-1,000,000
Strong rock	1,000,000-2,000,000
Very strong rock	2,000,000-5,000,000
Extremely strong rock	>5,000,000

Rock strength classification is not an indication of the Rippability

PARTICLE SIZE DESCRIPTION

Boulder	>12"	
Cobbles	>3" and <12"	
Gravel	<3" and >0.19"	3" to #4 sieve
Sand	<0.19" and >0.0030"	#4 to #200 sieve
Silt and clay	<.0030"	Passing #200 sieve

SOIL CLASSIFICATION CHART

MAJOR DIVISIONS			SYMBOLS		TYPICAL DESCRIPTIONS
			GRAPH	LETTER	
COARSE GRAINED SOILS	GRAVEL AND GRAVELLY SOILS	CLEAN GRAVELS (LITTLE OR NO FINES)		GW	WELL-GRADED GRAVELS, GRAVEL - SAND MIXTURES, LITTLE OR NO FINES
				GP	POORLY-GRADED GRAVELS, GRAVEL - SAND MIXTURES, LITTLE OR NO FINES
	MORE THAN 50% OF COARSE FRACTION RETAINED ON NO. 4 SIEVE	GRAVELS WITH FINES (APPRECIABLE AMOUNT OF FINES)		GM	SILTY GRAVELS, GRAVEL - SAND - SILT MIXTURES
				GC	CLAYEY GRAVELS, GRAVEL - SAND - CLAY MIXTURES
MORE THAN 50% OF MATERIAL IS LARGER THAN NO. 200 SIEVE SIZE	SAND AND SANDY SOILS	CLEAN SANDS (LITTLE OR NO FINES)		SW	WELL-GRADED SANDS, GRAVELLY SANDS, LITTLE OR NO FINES
				SP	POORLY-GRADED SANDS, GRAVELLY SAND, LITTLE OR NO FINES
	MORE THAN 50% OF COARSE FRACTION PASSING ON NO. 4 SIEVE	SANDS WITH FINES (APPRECIABLE AMOUNT OF FINES)	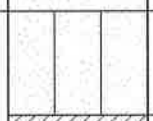	SM	SILTY SANDS, SAND - SILT MIXTURES
				SC	CLAYEY SANDS, SAND - CLAY MIXTURES
FINE GRAINED SOILS	SILTS AND CLAYS	LIQUID LIMIT LESS THAN 50		ML	INORGANIC SILTS AND VERY FINE SANDS, ROCK FLOUR, SILTY OR CLAYEY FINE SANDS OR CLAYEY SILTS WITH SLIGHT PLASTICITY
				CL	INORGANIC CLAYS OF LOW TO MEDIUM PLASTICITY, GRAVELLY CLAYS, SANDY CLAYS, SILTY CLAYS, LEAN CLAYS
			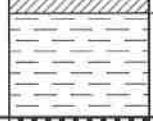	OL	ORGANIC SILTS AND ORGANIC SILTY CLAYS OF LOW PLASTICITY
MORE THAN 50% OF MATERIAL IS SMALLER THAN NO. 200 SIEVE SIZE	SILTS AND CLAYS	LIQUID LIMIT GREATER THAN 50	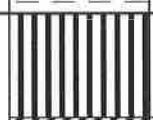	MH	INORGANIC SILTS, MICACEOUS OR DIATOMACEOUS FINE SAND OR SILTY SOILS
				CH	INORGANIC CLAYS OF HIGH PLASTICITY
				OH	ORGANIC CLAYS OF MEDIUM TO HIGH PLASTICITY, ORGANIC SILTS
HIGHLY ORGANIC SOILS			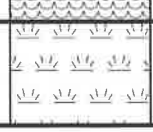	PT	PEAT, HUMUS, SWAMP SOILS WITH HIGH ORGANIC CONTENTS

USCS LEGEND 4/10/07

NOTE: DUAL SYMBOLS ARE USED TO INDICATE BORDERLINE SOIL CLASSIFICATIONS

BURGESS ENGINEERING AND TESTING, INC.
LOG OF BORING B1

Project Name: Addition to Hennessey Fire Station
Project Number: 731-22078
Site: Hennessey, OK
Architect/Engineer: Architects in Partnership
Drilling Method: Hollow Stem Auger (CME 55HT)
Date Drilled: 4-13-2022
Elevation:
Water Level: Dry at completion of drilling
Remarks:

LITHOLOGY	DESCRIPTION	DEPTH (FT.)	SAMPLE TYPE	RECOVERY INCHES	BLOWS/FT.	MOISTURE, %	DRY DENSITY PCF	UNCONFINED STRENGTH PSF	REMARKS
	Approximately 9 to 12 inches of topsoiil and grass	0							
	Yellowish gray sandy lean clay, moist, medium stiff to very stiff (CL)		SS	18	7	13.4			LL=37:PI=19 -#200=67.2%
		3.5							
	Yellowish gray lean clay with sand, moist, very stiff (CL)		SS	18	28	14.2			LL=37:PI=18 -#200=77.2%
		7							
		10.5	SS	18	18	16.6			
		14							
			SS	18	17	17.8			
	Test hole terminated at 16.5 feet	17.5							
		21							
		24.5							

borelog.fdt 6/4/2015

Note: This boring log is based on field classification and visual soil description and is further modified to include results of laboratory clasification tests, where available. This summary applies only at the location of this boring and at the time of drilling. Subsurface conditions may differ at other locations and may change at this location with the passage of time. The data presented are a simplification of the actual conditions encountered. Lithologic patterns are generalizations and necessarily imprecise. Lithologic contacts indicated represent the approximate boundary between subsurface material types and the transition may be gradual.

BURGESS ENGINEERING AND TESTING, INC.
LOG OF BORING B2

Project Name: Addition to Hennessey Fire Station
Project Number: 731-22078
Site: Hennessey, OK
Architect/Engineer: Architects in Partnership
Drilling Method: Hollow Stem Auger (CME 55HT)
Date Drilled: 4-13-2022
Elevation:
Water Level: Dry at completion of drilling
Remarks:

LITHOLOGY	DESCRIPTION	DEPTH (FT.)	SAMPLE TYPE	RECOVERY INCHES	BLOWS/FT.	MOISTURE, %	DRY DENSITY PCF	UNCONFINED STRENGTH PSF	REMARKS
	Approximately 9 to 12 inches of topsoiil and grass	0							
	Yellowish gray clayey sand, very loose to loose (SC)		SS	18	2	14.2			
		3.5	SS	18	10	17.3			LL=28:PI=15 -#200=47.6%
		7							
	Yellowish brown lean clay with sand, moist, very stiff (CL)	10.5	SS	18	21	16.8			
		14	SS	18	16	16.7			
	Test hole terminated at 16.5 feet	17.5							
		21							
		24.5							

borelog.fdt 6/4/2015

Note: This boring log is based on field classification and visual soil description and is further modified to include results of laboratory clasification tests, where available. This summary applies only at the location of this boring and at the time of drilling. Subsurface conditions may differ at other locations and may change at this location with the passage of time. The data presented are a simplification of the actual conditions encountered. Lithologic patterns are generalizations and necessarily imprecise. Lithologic contacts indicated represent the approximate boundary between subsurface material types and the transition may be gradual.

APPENDIX B

MOISTURE, GRADATION AND ATTERBERG TESTS RESULTS
FOR ADDITION TO HENNESSEY FIRE STATION
HENNESSEY, OKLAHOMA
PROJECT NO. 731-22078

BORE HOLE	SAMPLE DEPTH (FT)	MOISTURE (%)	%PASSING #10	%PASSING #40	%PASSING #200	LIQUID LIMIT (LL)	PLASTICITY INDEX (PI)
B1	2	13.4	96.6	91.1	67.2	37	19
	5	14.2	98.5	96.8	77.2	37	18
	10	16.6					
	15	17.8					
B2	2	14.2					
	5	17.3	81.7	76.1	47.6	28	15
	10	16.8					
	15	16.7					

GEOLOGICAL STATEMENT
FOR ADDITION TO HENNESSEY FIRE STATION
HENNESSEY, OKLAHOMA
PROJECT NO. 731-22078

The geologic materials at the site can be classified as **Terrace Deposits (Qts)** overlaying **Hennessey Unit (Phy)** based on the Engineering Classification of Geological Materials for Kingfisher County, Division Four.

Terrace Deposit (Qts)

"These materials consist of sand, silt, clay, gravel, and/or mixtures of these. Terrace materials occur adjacent to or near streams at higher elevations than the flood plain (bottom land). Like alluvium, these deposits are not all shown on the geologic unit maps.

The engineering properties of the unconsolidated materials are normally the same as the "C" horizon of the overlying soil. Most terrace deposits will cause seepage where the underlying geologic material is less pervious."

Hennessey Unit (Phy)

"This unit consists of red platy to blocky clay shales and mudstone. The mudstones are hard and appear blocky. The red clay shale of the Hennessey unit is characterized by numerous bands or streaks of white or light green color ranging from a few inches to four feet in thickness.

The total thickness of the unit varies from 400 to 600 feet.

The Hennessey Unit outcrops in a 5 to 15 miles north-south band across Grant, Garfield, Kingfisher, Logan, Canadian, and Oklahoma Counties in Division Four.

Topographically, the unit is near level to gently rolling prairies, but most of the more level outcrops of the unit are cultivated."

PART 1 - GENERAL

1.01 RELATED DOCUMENTS

A. Drawings and general provisions of the Contract, including General and Supplementary Conditions and Division 01 Specification Sections, apply to this Section.

1.02 SECTION INCLUDES

A. Selective demolition of built site elements.

B. Selective demolition of building elements for alteration purposes.

C. Abandonment and removal of existing utilities and utility structures.

1.03 RELATED REQUIREMENTS

A. Section 01 11 00 - Summary of Work: Limitations on Contractor's use of site and premises.

B. Section 01 50 00 - Temporary Facilities and Controls: Site fences, security, protective barriers, and waste removal.

C. Section 01 73 00 - Execution: Project conditions; protection of bench marks, survey control points, and existing construction to remain; reinstallation of removed products; temporary bracing and shoring.

D. Section 31 10 00 - Site Clearing: Vegetation and existing debris removal.

E. Section 31 23 24 - Fill and Backfill: Fill material for filling holes, pits, and excavations generated as a result of removal operations.

1.04 REFERENCE STANDARDS

A. 29 CFR 1926 - U.S. Occupational Safety and Health Standards; current edition.

B. NFPA 241 - Standard for Safeguarding Construction, Alteration, and Demolition Operations; most recent edition.

1.05 QUALITY ASSURANCE

A. Demolition Firm Qualifications: Company specializing in the type of work required.

1. Minimum of 5 years of documented experience.

PART 2 - PRODUCTS

NOT USED

PART 3 - EXECUTION

3.01 SCOPE

A. Furnish labor, materials and equipment necessary for all wrecking, demolition and removal of materials, debris and structures as shown on the Drawings and specified herein.

B. Furnish labor, materials and equipment necessary and required to protect existing work not to be demolished, occupants, vehicles, the public, adjacent property, utilities or any other item against damage.

C. Fill excavations, open pits, and holes in ground areas generated as result of removals, using specified fill; compact fill as specified in Section 31 23 24.

D. Infill open pits, and holes in floor slabs prep for floor finish installation generated as result of removals, using materials as specified in Section 03 30 00.

3.02 VISITING THE SITE

A. Should the General Contractor subcontract this work, the Demolition Subcontractor is required to visit the site and thoroughly familiarize himself with the onsite conditions prior to bidding. Submission of a bid shall be evidence of this site visit and no modifications to the Contract Price will be allowed due to this Subcontractors, or the General Contractor's, failure to visit the site.

3.03 GENERAL PROCEDURES AND PROJECT CONDITIONS

A. Comply with other requirements specified in Section 01 70 00.

B. Comply with applicable codes and regulations for demolition operations and safety of adjacent structures and the public.

1. Obtain required permits.

2. Comply with applicable requirements of NFPA 241.
3. Use of explosives is not permitted.
4. Take precautions to prevent catastrophic or uncontrolled collapse of structures to be removed; do not allow worker or public access within range of potential collapse of unstable structures.
5. Provide, erect, and maintain temporary barriers and security devices.
6. Use physical barriers to prevent access to areas that could be hazardous to workers or the public.
7. Conduct operations to minimize effects on and interference with adjacent structures and occupants.
8. Do not close or obstruct roadways or sidewalks without permit.
9. Conduct operations to minimize obstruction of public and private entrances and exits; do not obstruct required exits at any time; protect persons using entrances and exits from removal operations.
10. Obtain written permission from owners of adjacent properties when demolition equipment will traverse, infringe upon or limit access to their property.

C. Do not begin removal until receipt of notification to proceed from Owner.

D. Protect existing structures and other elements that are not to be removed.
1. Provide bracing and shoring.
2. Prevent movement or settlement of adjacent structures.
3. Stop work immediately if adjacent structures appear to be in danger.

E. Partial Removal of Paving and Curbs: Neatly saw cut at right angle to surface.

F. Demolition operations shall be conducted in the safest possible manner in the best practices of the trade and all applicable codes, laws ordinances and lawful orders of all regulatory agencies shall be dutifully followed.

G. Take all measures adequate and necessary to protect structures to be demolished from premature collapse.

H. Take all measures adequate and necessary to protect structures to remain. Provide temporary bracing as required. Repair any and all damages to structures or other Work or items to remain without additional cost to the Owner.

I. Take all measures adequate and necessary to protect all persons, vehicles, property, utilities or other items from damage or harm during demolition operations.

J. Footing, foundations and other ancillary subsurface structures of structures to be demolished shall also be removed.

K. Disconnect, cap, remove or otherwise incapacitate utilities and existing sprinkler system running through construction areas as shown on Drawings or as Directed by Architect. No "open" utilities or "live" electrical service shall be left in place.

3.03 EXISTING UTILITIES

A. Coordinate work with utility companies; notify before starting work and comply with their requirements; obtain required permits.

B. Protect existing utilities to remain from damage.

C. Do not disrupt public utilities without permit from authority having jurisdiction.

D. Do not close, shut off, or disrupts existing life safety systems that are in use without at least 7 days prior written notification to Owner.

E. Do not close, shut off, or disrupt existing utility branches or take-offs that are in use without at least 3 days prior written notification to Owner.

F. Locate and mark utilities to remain; mark using highly visible tags or flags, with identification of utility type; protect from damage due to subsequent construction, using substantial barricades if necessary.

G. Remove exposed piping, valves, meters, equipment, supports, and foundations of disconnected and abandoned utilities.

F. Salvage Material:
1. Owner's Right to Salvage: Owner retains full rights to salvage any and all materials in structures to be demolished. Prior to the start of any demolition work, Contractor shall give notice to the Owner and verify with the Owner that all materials and equipment to be salvaged have been removed.
2. Contractor's Right to Salvage: After the Owner has completed his salvage, all materials and

equipment in buildings to be demolished shall become property of the Contractor, and shall be promptly removed from the project site.

3.04 SELECTIVE DEMOLITION FOR ALTERATIONS

A. Drawings showing existing construction and utilities are based on casual field observation and existing record documents only.

1. Verify that construction and utility arrangements are as shown.
2. Report discrepancies to Architect before disturbing existing installation.
3. Beginning of demolition work constitutes acceptance of existing conditions that would be apparent upon examination prior to starting demolition.

B. Remove existing work as indicated and as required to accomplish new work.

1. Remove items indicated on drawings.

C. Services (Including but not limited to HVAC, Plumbing, Fire Protection, Electrical, and Telecommunications): Remove existing systems and equipment as indicated.

1. Maintain existing active systems that are to remain in operation; maintain access to equipment and operational components.
2. Where existing active systems serve occupied facilities but are to be replaced with new services, maintain existing systems in service until new systems are complete and ready for service.
3. Verify that abandoned services serve only abandoned facilities before removal.

D. Protect existing work to remain.

1. Prevent movement of structure; provide shoring and bracing if necessary.
2. Perform cutting to accomplish removals neatly and as specified for cutting new work.
3. Repair adjacent construction and finishes damaged during removal work.
4. Patch as specified for patching new work.

3.05 DEBRIS AND WASTE REMOVAL

A. Remove debris, junk, and trash from site.

B. Leave site in clean condition, ready for subsequent work.

C. Clean up spillage and wind-blown debris from public and private lands.

3.02 CLEAN-UP

A. All materials and debris resulting from demolition operations shall be removed from site and promptly and properly disposed of.

B. Demolished materials shall NOT be stored on site.

C. Absolutely no burning of materials or debris shall be permitted on this job.

D. Take adequate and sufficient measures to prevent wind from scattering debris over other areas or adjacent property. Promptly clean-up all windblown debris.

END OF SECTION

PART 1 - GENERAL

1.01 RELATED DOCUMENTS

A. Drawings and general provisions of Contract, including General and Supplementary Conditions and Division - 01 Specification sections, apply to work of this section.

1.02 DESCRIPTION OF WORK

A. The work of this section includes all labor, materials and equipment required to form all cast-in-place concrete shown on the drawings including but not limited to all slabs, joists, beams, columns, walls, stairs, and equipment pads.

B. Section Includes

1. Formwork for cast-in-place concrete.
2. Openings in formwork for other affected work.
3. Form accessories such as snap ties, bracing, etc.
4. Stripping formwork.

1.03 REFERENCES

(Current Edition at Date of Bid)

A. ACI 347: Recommended Practice for Concrete Formwork.

1.04 RESPONSIBILITY

A. The design, construction and safety of all formwork shall be the responsibility of the Contractor. All forms, shores, backshores, falsework, bracing, and other temporary supports shall be engineered to support all loads imposed including the wet weight of concrete, construction equipment, live loads, lateral loads due to wind and wet concrete imbalance. The Contractor shall also be responsible for determining when temporary supports, shores, backshores, and other bracing may be safely removed.

1.05 DEFINITIONS

A. Shoring: The activity to support formwork.

B. Re-shoring: The activity to reduce the amount of formwork supporting concrete elements. As concrete sets and strength increases, less need for formwork occurs gradually until concrete becomes free standing.

1.06 DESIGN RESPONSIBILITY

A. The design of all concrete formwork, formwork removal, shoring, and backshoring requirements shall be performed by a registered professional engineer in the state of Oklahoma and experienced in the design of concrete formwork. The Contractor shall employ the formwork engineer.

1.07 SUBMITTALS

A. Shop Drawings: Fabrication and erection drawings of forms for specific finished concrete surfaces, as indicated. Show general construction of forms, jointing, special joints or reveals, location and pattern of form tie placement, and other items affecting exposed concrete visibility.

B. Form Release Agent: Where concrete surfaces are scheduled to receive special finishes or applied coverings which may be affected by agent submit manufacturer's instructions for use of agent.

1.08 QUALITY ASSURANCE

A. Designer's Qualifications: Structural professional engineer who complies with Oklahoma licensing law, has experience in concrete formwork, and is acceptable to the authority having jurisdiction.

B. Design Forms:

1. With sufficient strength to maintain finished tolerances indicated in Section 03 35 00, to support loads, pressures, and allowable stresses as outlined in ACI 347 and for design considerations such.
2. As wind loads, allowable stresses, and other applicable requirements of local Laws and Regulations.
3. To permit easy removal.
4. For required finishes.

C. The design, engineering, and construction of formwork is CONTRACTOR's responsibility.

1.09 JOB CONDITIONS

A. For reference purposes, establish and maintain sufficient control points and bench marks to check tolerances. Maintain in an undisturbed condition and until final completion and acceptance of Work.

B. Regardless of tolerances specified, allow no portion of Work to extend beyond legal boundaries.

1.10 FIELD SAMPLES

A. Prepare field samples and submit per Section 01 33 00.

B. Construct and erect sample formwork panel for architectural concrete surfaces receiving special treatment or finish as a result of formwork. Formwork to include vertical and horizontal form joints and typical rustication joints when required.

C. Size panel to indicate special treatment or finish required, including form release agent.

D. Remove formwork after casting concrete.

1.11 ACCEPTANCE

A. Secure ENGINEER's inspection of form layout for concrete flat work.

PART 2 - PRODUCTS

2.01 PAN FORMS

A. Specification: Unless specified otherwise, concrete joist construction shall conform to current version of Manual of Standard Practice, Chapter 10, as published by CRSI.

B. Material and Pan Type:

1. Material: Pans shall be fabricated either of steel that is free of dents, irregularities, sag and rust or of glass-fiber reinforced plastic that is molded under pressure with matched dies. Pan forms allowing warped surfaces, leakage of concrete at joints, and uneven surfaces beyond tolerance levels will not be acceptable.

2. Subject to pan tolerance and the surface finish required by the surface finish class SF-1.0, pan forms may be either new pans or reconditioned pans at Contractor's option. Forms may be "long forms", "flange forms", "long flange forms", or "adjustable forms" at Contractor's option. Pan splices may be lapped, reinforced butt jointed, or semi-butt jointed (using end caps welded back-to-back with 2" maximum distance between pan ends). The maximum number of joints in any bay shall be four located at approximately the one-fifth points in each bay.

3. New Pans. All pan forms used in areas designated to have surface finish class SF-2.0 shall be new pans either one piece continuous from beam to beam or beam to header ("longforms", "long flange forms", or "adjustable forms") without splices or with reinforced butt joint spliced. "Flange forms" are not acceptable, nor will forms be permitted that are lapped spliced or semi-butt joint spliced (using end caps welded back-to-back). Pans shall meet tolerances and the surface finish required for surface finish class SF-2.0.

5. New Pans. All pan forms used in areas designated to have Surface Finish-3.0 shall be new pans either one piece continuous from beam to beam or beam to header ("longforms", "long flange forms", or "adjustable forms") without splices or reinforced butt joint spliced. "Flange forms" are not acceptable, nor will forms be permitted that are lapped spliced or semi-butt joint spliced (using end caps welded back-to-back). Pans shall meet tolerances and the surface finish required for surface finish class SF-3.0.

The pan form surfaces specified herein are intended to be architecturally

2.02 FORM-FACING MATERIALS

A. General:

1. Arrange facing material orderly and symmetrical, keeping number of seams to a minimum.

2. Do not use material with raised grain, patches, or other defects which will impair texture of concrete surface.

B. Smooth-Formed Finished Concrete: Unless otherwise specified, formwork for exposed concrete surfaces as defined by the Surface Finish Class, shall consist of plywood, metal, metal framed plywood, or other acceptable surface. Formwork shall provide a continuous straight and smooth surface conforming to the joint system as specified on the Architect's drawings. Form material shall have sufficient thickness to withstand pressure of concrete without bow or deflection. Plywood shall be exterior grade plywood panels, suitable for concrete forms, complying with U.S. Product Standard PS-1, each piece bearing a legible inspection trademark, and as follows:

1. Phenolic Surface Film Overlay over Hardwood Face, Class 1 or better.

2. High Density Overlay (100/30 min. rating) on Hardwood Face, Class 1 or better.

3. High Density Overlay (100/30 min. rating) on Softwood Face, Class 1 or better.
4. Medium Density Overlay on Hardwood Face, Class 1 or better, mill-release agent treated and edge sealed.
5. Medium Density Overlay on Softwood Face, Class 1 or better, mill-release agent treated and edge sealed.
6. Structural 1, B-B, or better, mill oiled and edged sealed.
7. "B-B (Concrete Form) Plywood", Class 1, or better, mill-oiled and edge sealed.

B. Non-specific formed concrete: Unless otherwise specified, the default finish for formed surfaces shall be rough-form finish constructed with plywood, lumber, metal or other acceptable material. Lumber shall be dressed on at least two edges and one side for tight fit. The minimum grade shall be B-C, exterior grade.

C. Textured-form finished concrete: For exposed surfaces as noted on the drawings provide units of form face design, size, arrangement and configuration that matches Architect's control sample. Provide solid backing and form supports to ensure stability of textured form liners. See Architect's drawings, specifications and control sample for special form textured finish concrete.

2.03 CYLINDRICAL COLUMNS AND SUPPORTS

A. Round section members shall be formed with metal, glass-fiber-reinforced plastic, paper, or fiber tubes that produce surfaces with gradual or abrupt irregularities not exceeding specified formwork surface class unless otherwise specified. Units shall have sufficient wall thickness to resist loads imposed by wet concrete without detrimental deformation.

2.04 FORMWORK ACCESSORIES

A. Form Ties:
1. Use ties constructed so that end fasteners can be removed without spalling concrete faces.
2. After end fasteners of ties have been removed, embedded portion of ties are to terminate not less than 2 times the diameter or thickness of the fasteners from formed faces of concrete, but in no case greater than 3/4 inch.
3. When the formed face on concrete is not exposed, form ties may be cut off flush with formed surfaces. Use ties with 3/4 inch diameter cones on both ends or an approved equal for water retaining structures.
4. Dampproofed Surfaces: Furnish ties with integral water-barrier plates to walls indicated to receive dampproofing or waterproofing.
5. Exposed to Weather or Unconditioned Space: Provide removable, glass-fiber-reinforced plastic, stainless steel, or galvanized form ties that will leave no corrodible metal closer than 1 1/2 inches in surfaces that will be exposed to weather or in an unconditioned space in the final structure. The ties shall leave holes no larger than 1 inch in diameter in concrete surfaces when the ends or end-fasteners are removed.

B. Pre-molded Expansion Joint Filler: Unless indicated otherwise, Preformed asphalt impregnated fiber, ASTM D1751, 1/2 inch thick.

C. Form Release Agent: Commercial formulation that will not bond with, stain, nor adversely affect concrete surfaces or impair subsequent treatment of concrete surfaces requiring bond or adhesion, nor impede curing with water or curing compounds. Provide a product that has a maximum VOC (Volatile Organic Compounds) of 50 g/l but not greater than that permitted by the local government agency having jurisdiction in the area where the project is located. To prevent contamination, agents used on potable water structures are subject to review by ENGINEER prior to use.
Products: Subject to compliance with requirements, provide one of the following:
1. "Bio-Release EF", Dayton Superior
2. “Farm Fresh”, Unitex
3. “Form-Eze Natural”, The Euclid Chemical Company, Inc.
4. “Bio-Form”, Universal Form Clamp
5. “Aqua Blue”, US Spec

D. NAILS AND FASTENERS
1. Use only galvanized nails and fasteners for securing formwork in structures exposed to weather or unconditioned spaces such as garages, canopies and porte-cocheres.

D. Fillets for Chamfered Corners: Wood, Metal, PVC or Rubber strips 1 inch x 1 inch size, maximum length possible.

PART 3 - EXECUTION

3.01 INSPECTION

A. Verify lines, levels, and measurements before proceeding with formwork.

3.02 FORM CONSTRUCTION

A. All designs for forms must:

1. Have the strength to withstand the pressure resulting from the placement of concrete and construction loads while maintaining the specified tolerances.
2. Design forms to withstand support loads, lateral pressure, and allowable stresses outlined in ACI 347. Design for wind, allowable stresses, and other applicable requirements.

B. Form Materials:

1. Smooth Forms: Use of smooth-faced panel type material of sufficient strength to provide continuous, straight, smooth as-cast surfaces.
2. Architectural Concrete: Use of 3/4" min. "MDO" or "HDO" plywood.
3. Embedded for accessories: Use of commercially manufactured items only.
4. Form Ties: Use of Factory-fabricated, adjustable-length, removable or snap-off metal form ties, designed to prevent deflection and spalling of concrete surfaces upon removal only.

C. Form Construction:

1. Construct forms to sizes, shapes, lines and dimensions shown, and to obtain accurate alignment, location, grades, level and plumb work in finished structures. Provide for openings, offsets, sinkages, keyways, recesses, moldings, rustications, reglets, chamfers, blocking, screeds, bulkheads, anchorages and inserts and other features required in work. Use selected materials to obtain required finishes. Solidly butt joints and provide back-up at joints to prevent leakage of cement paste.
2. Construction is in accordance with ACI 347, to exact sizes, shapes, lines, and dimensions shown.
3. Shoring and struts with positive means of adjustment capable of taking up formwork settlement during concrete placing operations.
4. Support of form facing materials by structural members spaced sufficiently close to prevent upward or lateral deflection during and after concrete placement.
5. Camber in the formwork as required for anticipated deflections is acceptable when specified.
6. At construction joints, overlap of forms over hardened concrete at least six inches.

D. Earth Forms: Side forms of footings may be omitted and concrete placed directly against excavation upon approval from architect only. When earth forms are used, provide one inch minimum additional concrete on each side of the minimum design footing width.

E. Make forms sufficiently tight to prevent loss of concrete.

F. Unless indicated otherwise, place chamfer strips in corners of forms to produce beveled edges on permanently exposed exterior corners.

G. To maintain specified finish tolerances, camber formwork to compensate for anticipated deflections.

H. Provide positive means of adjustment using wedges, jacks, Shores, and struts to take up all settlement during concrete placing operation.

I. Provide temporary ports in formwork to facilitate cleaning and Inspection. Locate openings at bottom of forms to allow flushing water to drain.

J. At construction joints, overlap forms over hardened concrete at least 6 inches. Hold forms against hardened concrete to prevent offsets or loss of mortar at construction joint and to maintain true surface.

K. Construct wood forms for wall openings to facilitate loosening, or counteract swelling.

L. Fasten wedges used for final adjustment of forms prior to concrete placement in position after final check.

M. Anchor formwork to Shores, supporting surfaces or members to prevent upward or lateral movement and deflection of any part of formwork system during concrete placement.

N. Provide runways for moving equipment with struts or legs, supported directly on formwork or structural member without resting on reinforcing.

O. Position expansion joint material and other embedded items accurately and support to prevent displacement.

P. To prevent entry of concrete, fill voids in sleeves, inserts, and anchor slots temporarily with readily removable material.

Q. For architectural concrete, limit deflection of facing materials between studs as well as deflection of studs

and walers to 0.0025 times span.

R. For underground concrete work, do not use soil walls for forming unless authorized by ENGINEER.

3.03 INSERTS, EMBEDDED PARTS, AND OPENINGS

A. Provide formed openings for elements embedded in or passing through concrete.

B. Coordinate work of other sections for the forming and setting of openings, slots, recesses, chases, sleeves, bolts, anchors, and other inserts.

C. Install accessories per manufacturer's instructions. Ensure items are not disturbed during concrete placement.

3.04 FORM FINISHES

A. Use forms with smooth rubbed, scrubbed, sand floated finishes that meet ACI 347 unless indicated otherwise.

B. For As-cast Finishes:

1. Install form panels in orderly arrangement with joints planned in approved relation to building elements.

2. Where panel joints are recessed or otherwise emphasized, locate form ties within joints, not within panel areas

3. Where an as-cast finish is required, no grouting will be permitted in the finishing operation.

C. Textured Finishes: As indicated.

3.05 APPLICATION OF FORM RELEASE AGENT

A. Apply form release agent on formwork per manufacturer's instructions. Apply prior to placing reinforcing steel, anchoring devices, and embedded items.

B. Form coatings: Coating of forms is to occur prior to placement of reinforcing steel. Excess form coating material does not accumulate in forms or come into contact with surfaces which will be bonded to fresh concrete.

3.06 FORM REMOVAL

A. Removal of forms: Formwork not supporting concrete may be removed after curing for 24 hours at temperatures not less than 50 F unless removal is contingent upon concrete strength. Where a specified strength is required prior to removing forms, forms shall be removed when specified parameters have been satisfied.

B. Do not pry against face of concrete. Use only wooden wedges.

C. When repair of surface defects or finishing is required at an early age, remove forms as soon as concrete has hardened sufficiently to resist damage from removal operations.

D. Remove top forms on sloping surfaces of concrete as soon as concrete has attained sufficient stiffness to prevent sagging. Perform needed repairs or treatment required on such sloping surfaces at once, followed by specified curing.

E. Loosen wood forms for wall openings as soon as it can be accomplished without damage to concrete.

F. Formwork for columns, walls, sides of beams, and other members not supporting the weight of concrete may be removed as soon as the concrete has hardened sufficiently to resist damage from removal.

G. Where no Re-shoring is planned, leave forms and Shoring used to support weight of concrete in beams, slabs, and other concrete members in place until concrete has attained its specified strength.

H. Where Re-shoring is planned, supporting formwork may be removed when concrete has reached 70 percent of specified strength, provided Re-shoring is installed immediately.

I. When Shores and other vertical supports are so arranged that non-load carrying, form-facing material may be removed without loosening or disturbing Shores and supports, facing material may be removed at an earlier age as directed.

3.07 RESHORING

A. When Re-shoring is permitted or required, plan operations in advance and obtain approval.

B. During Re-shoring do not subject concrete in beam, slab, column, or any other structural member to combined dead and construction loads and live loads in excess of loads permitted for developed concrete strength at time of Re-shoring.

C. Placing Re-shores as soon as practical after stripping operations are complete, but in no case later than end of working day on which stripping occurs.

D. Tighten Re-shores to carry required loads without over-stressing.

E. Leave Re-shores in place until the concrete being supported has reached its specified strength.

F. For floors supporting Shores under newly placed concrete, level original supporting Shore or Re-shore.

1. Re-shoring system shall have a capacity to resist anticipated loads in all cases equal to at least 1/2 the capacity of the Shoring system.

2. Unless otherwise specified locate Re-shores directly under a Shore.

3. In multistory buildings, extend Re-shoring through a sufficient number of stories to distribute the height of newly placed concrete, forms, and construction live loads in such a manner that design loads of floors and supporting Shores are not exceeded.

G. Design, engineering, and construction of Shoring and Re-shoring is the responsibility of the CONTRACTOR.

3.08 REMOVAL STRENGTH

A. When removal of formwork or Re-shoring is based on concrete reaching a specified strength, it shall be assumed that concrete has reached this strength when either of the following conditions has been met:

1. When test cylinders, field cured along with the concrete they represent, have reached the specified strength.

2. When concrete has been cured per Section 03 39 00 for the same length of time as the site-cured cylinders that reached specified strength. Determine the length of time the concrete has been cured in the structure by cumulative number of days or fractions thereof, not necessarily consecutive, during which the air temperature is above 50 deg. F. and concrete has been damp or sealed from evaporation and loss of moisture.

3.09 REUSE OF FORMS

A. Do not reuse forms if there is any evidence of surface wear or defect which would impair quality of concrete surface.

B. Thoroughly clean and properly coat forms before reuse.

3.10 FIELD QUALITY CONTROL

A. Before commencing a pour, verify connections, form alignment, ties, inserts and Shoring are placed and secure.

B. Observe formwork continuously while concrete is being placed to verify that the forms are plumb and there are no deviations from desired elevation, alignment, or camber.

C. If during construction any weakness develops and false-work shows undue settlement or discoloration, stop work, remove affected construction if permanently damaged, and strengthen false-work

END OF SECTION

PART 1 - GENERAL

1.01 RELATED DOCUMENTS

A. Drawings and general provisions of the Contract, including General and Supplementary Conditions and other Division 01 Specification Sections apply to work of this section.

1.02 DESCRIPTION OF WORK

A. The work of this section includes labor, materials, hardware, equipment, transportation and services required to fabricate and place all reinforcement for cast-in-place concrete including bars, welded wire fabric, ties and supports shown on the drawings and as specified.

B. Section Includes:

1. Reinforcing steel bars, wire fabric or rod mats for cast-in-place concrete.
2. Support chairs, bolsters, bar supports, and spacers for supporting reinforcement.

1.03 REFERENCES

(Current Edition at Date of Bid)

A. AASHTO M 254: Standard Specification for Corrosion Resistant Coated Dowel Bars.

B. ACI 117: Specification for Tolerances for Concrete Construction and Materials.

C. ACI 301: Specifications for Structural Concrete.

D. ACI 315R: Guide to Presenting Reinforcing Steel Design Details

E. ACI 421.1R: Guide for Shear Reinforcement for Slabs.

F. ASTM A 36: Standard Specification for Carbon Structural Steel.

G. ASTM A 416: Standard Specification for Low-Relaxation, Seven-Wire Steel Strand for Prestressed Concrete.

H. ASTM A 576: Standard Specification for Steel Bars, Carbon, Hot-Wrought, Special Quality.

I. ASTM A 615: Standard Specification for Deformed and Plain Carbon-Steel Bars for Concrete Reinforcement.

J. ASTM A 706: Standard Specification for Deformed and Plain Low-Alloy Steel Bars for Concrete Reinforcement.

K. ASTM A 722: Standard Specification for High-Strength Steel Bars for Prestressed Concrete.

L. ASTM A 767: Standard Specification for Zinc-Coated (Galvanized) Steel Bars for Concrete Reinforcement.

M. ASTM A 775: Standard Specification for Epoxy-Coated Steel Reinforcing Bars.

N. ASTM A 884: Standard Specification for Epoxy-Coated Steel Wire and Welded Wire Reinforcement.

O. ASTM A 934: Standard Specification for Epoxy-Coated Prefabricated Steel Reinforcing Bars.

P. ASTM A 1035: Standard Specification for Deformed and Plain, Low-Carbon, Chromium, Steel Bars for Concrete Reinforcement.

Q. ASTM A 1044: Standard Specification for Steel Stud Assemblies for Shear Reinforcement of Concrete.

R. ASTM A 1064: Standard Specification for Carbon-Steel Wire and Welded Wire Reinforcement, Plain and Deformed, for Concrete.

S. ASTM C 1116: Standard Specification for Fiber-Reinforced Concrete.

T. ASTM C 1609 Standard Test Method for Flexural Performance of Fiber-Reinforced Concrete (Using Beam With Third-Point Loading)

U. ASTM D 3963: Standard Specification for Fabrication and Jobsite Handling of Epoxy-Coated Steel Reinforcing Bars.

V. AWS D1.1: Structural Welding Code - Steel.

W. AWS D1.4: Structural Welding Code - Steel Reinforcing Bars.

X. CRSI Document: Manual of Standard Practice.

1.04 SUBMITTALS

A. Manufacturer's Certificate: Submit mill test certificates of supplied concrete reinforcement, indicating physical and chemical analysis.

B. Welder's certification.

1. Indicate sizes, spacing, locations, and quantities of reinforcing steel, wire fabric, bending and cutting schedules, splicing, stirrup spacing, supporting, and spacing devices.

2. When required, prepare shop drawings by an engineer who complies with Oklahoma licensing law and is acceptable to agency having jurisdiction.

C. Shop Drawings: Comply with requirements of ACI 315R. Include bar schedules, shapes of bent bars, spacing of bars and locations of splices.

1.05 QUALITY ASSURANCE

A. The Contractor is responsible for management of quality control on the project, including verification of the compliance of the workmanship and materials furnished by his subcontractors and suppliers.

B. Perform concrete reinforcement work per CRSI Manual of Standard Practice.

C. Comply with ACI 117 AND ACI 301.

D. Welders: Certified to comply with AWS D1.1 or AWS D1.4 as applicable.

1.06 ACCEPTANCE

A. Unless specified otherwise, chairs for supporting reinforcement in flat slabs are spaced as follows.

1. 3 feet maximum for No. 5 and smaller bars.

2. 5 feet maximum for bars larger than No. 5.

B. Dowels are placed on dowel baskets and properly aligned.

C. Epoxy and galvanized coatings are not chipped or cut. Ends of cut bars are epoxy coated or galvanize painted prior to placement.

D. Minimum covering over reinforcement is as specified.

PART 2 - PRODUCTS

2.01 MATERIALS

A. Reinforcement:

1. Reinforcing materials shall be delivered from the mill in bundles that are identified as to heat number and manufacturer and accompanied with mill and analysis test reports and an affidavit from the fabricator/supplier stating that the material conforms to the requirements of the governing ASTM specification listed herein.

2. Deformed bar material that is not identifiable according to the criteria listed above shall be tested for tensile strength and bend tests according to ASTM A 615 on a sample of 2 bars for each ten tons or fraction thereof of unidentified material for each bar size. The bars shall be a minimum of 24 inches long. Bend tests are not required for #14 and # 18 bars. Fabricator/supplier shall submit the results of such tests for record.

3. Reinforcing Bars: Reinforcing bars shall conform to ASTM A 615, Grade 75 as noted on the drawings.

4. Reinforcing Bars: Reinforcing bars shall conform to ASTM A 615 Grade 60 as noted on the drawings.

5. Special Requirements for Grade 60 Reinforcing Bars: ASTM A 615 Grade 60 Reinforcing bars used as longitudinal reinforcing in locations as noted on the drawings shall additionally comply with the following requirements.

a. The actual yield strength based on mill tests shall not exceed the nominal yield strength fy by more than 18,000 psi.

b. The ratio of the actual tensile strength to the actual yield strength is not less than 1.25.

6. Reinforcing Bars: Reinforcing bars used as longitudinal reinforcing in locations as noted on the drawings shall conform to ASTM A 706.

7. Reinforcing Steel: Reinforcing steel used as transverse reinforcing or as spiral reinforcing as noted on the drawings shall conform to ASTM A 1035.

8. Weldable Reinforcing Bars: All reinforcing bars noted on the drawings as being required to be welded shall conform to ASTM A 706.

9. Galvanized Reinforcing Steel: Provide galvanized reinforcing bars at the locations indicated on the drawings. Galvanized reinforcing bars shall conform to ASTM A 767 Class II (2.0 oz. zinc PSF), hot dipped galvanized after fabrication and bending. Bars that are to be galvanized shall conform to the type of steel required for the given situation as noted on the drawings.

10. Epoxy-Coated Reinforcing Steel: Provide epoxy coated reinforcing bars at the locations indicated

on the drawings. Epoxy coated reinforcing bars shall conform to ASTM A 775. Bars that are to be epoxy coated shall conform to the type of steel required for the given situation as noted on the drawings.

11. Epoxy-Coated Fabricated Reinforcing Steel: Provide reinforcing bars that are epoxy-coated after fabrication at the locations indicated on the drawings. Reinforcing bars that are epoxy-coated after fabrication shall conform to ASTM A 934. Bars that are to be epoxy-coated shall conform to the type of steel required for the given situation as noted on the drawings.
12. Use Reinforcing steel made from 90% recycled material, 2/3 of which shall be post-consumer material. A minimum of 50% of the material in the reinforcement must have been extracted, harvested, or recovered as well as manufactured, within 500 miles of the project site.
13. Plain Steel Welded Wire Reinforcement: ASTM A 1064 with a yield strength of 65,000 PSI. Provide in flat sheets only.
14. Deformed-Steel Welded Wire Reinforcement: ASTM A 1064 with a yield strength of 70,000 PSI. Provide in flat sheets only.
15. Galvanized Plain-Steel Welded Wire Reinforcement: ASTM A 1064, fabricated from galvanized steel wire into flat sheets.
16. Epoxy Coated Plain-Steel Welded Wire Reinforcement: ASTM A 884, Class A, plain steel.
17. Epoxy Coated Deformed-Steel Welded Wire Reinforcement: ASTM A 884, Class A, deformed steel.
18. Strands: Uncoated seven wire, one half inch diameter, stress relieved 270 ksi strand low relaxation type, ASTM A 416 and "Specification for Unbonded Single Strand Tendons" as published by the Post-Tensioning Institute.
19. Prestressing Bars: All prestressing bars shall be deformed threadbars conforming to ASTM A 722 with a minimum ultimate tensile strength of 150 KSI and other properties as specified on page 11-21 of the PCI Design Handbook, fifth edition. Threadbars, plate anchorages and couplings shall be furnished by Dywidag Systems International or Williams unless approved otherwise in writing by the Engineer.
20. Wire: Smooth wire for spiral reinforcement shall conform to ASTM A 1064 with a minimum yield strength of 70,000 PSI.
21. Epoxy-Coated Plain-Steel Wire: ASTM A 884, Class A, plain-steel wire.
22. Joint Dowel Bars: Smooth bars used to dowel across slab-on-ground construction joints shall conform to ASTM A 615, Grade 40 or ASTM A 36, plain-steel bars. Cut bars true to length with ends square and free of burrs.
23. Epoxy-Coated Joint Dowel Bars: Smooth epoxy-coated bars used to dowel across slab-on-ground construction joints shall conform to ASTM A 775 with ASTM A 615, Grade 40 or ASTM A 36 plain-steel bars. Cut bars true to length with ends square and free of burrs.
24. Dowel Bar Sleeves: Plastic or gage metal (26 ga. min.) sleeves with an inside diameter of 1/16 inch greater than the dowel bar that it encases, that have the strength, durability, and design to provide free movement of the dowel relative to the concrete slab and that are specifically manufactured for this purpose.
25. Alternate Slab-on-Ground Joint Load Transfer Systems: A system that consists of flat, ASTM A 36 plate that is saw cut into a square or rectangular shape and is embedded into or encased by a plastic sleeve that allows movement in both lateral directions but not in the vertical direction. Acceptable systems are manufactured by PNA Construction Technologies with products known by the names "Diamond Dowel System" and "PD3 Basket" and Greenstreak Group Inc. with products known as "Speed Plate' and "Double-Tapered Basket".
26. Tie Wire: Tie wire shall be annealed steel tie wire, minimum 16 gauge.
    a. Tie wire in architecturally exposed concrete shall be plastic coated or stainless steel.
    b. Tie wire for epoxy-coated reinforcement shall be epoxy-coated.
    c. Tie wire for galvanized reinforcement shall be galvanized.
27. Headed Steel Stud Punching Shear Reinforcement: Punching shear reinforcement using headed studs welded to flat bars shall be manufactured in conformance with ASTM A 1044 and approved by the ICC Evaluation Service, Inc. as expressed in an ICC Evaluation Report for use as punching shear reinforcement for slabs and footings designed in accordance with ACI 421.1. The following are acceptable products:
    a. Decon Studrails; Decon.
    b. Dayton Shear Resistance System (DSR) D-140; Dayton Superior Corporation.

c. Suncoast Stud Reinforcement System; Suncoast Post-Tension, Ltd.

28. Supports for Reinforcement: Provide supports for reinforcement including bolsters, chairs, spacers and other devices for spacing, supporting and fastening reinforcing bars and welded wire fabric in place. Use wire bar type supports complying with CRSI recommendations.

a. Slabs-on-Ground: Use precast concrete bar supports (dobies) or supports with sand plates or horizontal runners designed for use on ground.

b. Spread Footing Bottom Reinforcement: Use precast concrete bar supports (dobies) or chairs designed for soil-supported slabs.

c. Mat Foundation: Use precast concrete bar supports (dobies), chairs designed for soil-supported slabs, or poured-in-place concrete curbs.

d. Exposed to View Concrete: Provide supports with legs which are plastic protected stainless steel protected (CRSI, Class 2).

e. Support of Epoxy-Coated Reinforcement: Provide epoxy-coated or other dielectric-polymer-coated wire bar supports to support epoxy-coated reinforcement.

f. Support of Galvanized Reinforcement: When NOT exposed to view, provide galvanized wire bar supports to support galvanized reinforcement. In all exposed to view conditions provide supports with legs which are plastic protected stainless steel protected (CRSI, Class 2).

2.02 SPLICES

A. End Bearing Compression Splices: Members with end bearing compression splices shall have vertical bars saw cut or otherwise finished for true bearing. Bar ends shall terminate in flat surfaces within 1 1/2 degrees of a right angle to the axis of the bars and shall be fitted within 3 degrees of full bearing after assembly. Splice bars shall be held in concentric contact by a suitable device. The following are acceptable end bearing compression devices:

1. Speed Sleeve; Erico Products, Inc.
2. G-Loc; BarSplice Products, Inc.
3. Or other Engineer-approved product.

B. Mechanical Tension Splices:

1. Mechanical splices shall conform to Type 1 and Type 2 splices.

a. Type 1 splice shall develop 1.25 times the specified yield strength of the splice bar.

b. Type 2 splice shall meet the requirements of Type 1 splice and, in addition, develop the full tensile strength of the splice bar.

2. Splices shall be approved by the ICC-Evaluation Service, Inc and shall have the Evaluation Report submitted for Engineer review.

3. The bar ends that are to attach to the splice shall be prepared and installed in accordance with the manufacturer's requirements.

4. The following are acceptable mechanical tension splices (splices qualified for use with grade 75 bars are parenthetically noted):

a. BarLock, S-Series; Dayton Superior.

b. US/MC-SAE Mechanical Coupler; Dayton/Richmond, Inc.

c. DB Grout Sleeve; Dayton/Richmond

d. ZAP Screwlok; BarSplice Products, Inc. (qualified for use with grade 75 bars)

e. BPI Grip XL System; Barsplice Products, Inc.

f. Taper Threaded Grip Twist System; Barsplice Products, Inc.

g. Lenton Coupler; Erico Products, Inc. (for grade 75 bars, use only "Standard Coupler")

h. NMB Splice Sleeve; Splice Sleeve North America" (qualified for grade 75 #7 bars and higher)

i. BarLock, L-Series; Dayton Superior

j. Taperlok Couplers; Dayton Superior

k. Lenton Interlok; Erico Products, Inc.

l. Griptec; Dextra Manufacturing Co.

m. or other Engineer-approved product.

C. Dowel Bar Replacement: All grade 60 reinforcing steel dowel bars shown on the drawings crossing

concrete construction joint surfaces with inserts cast flush against the form and having reinforcing bars connected to the insert in a subsequent concrete pour shall conform to the following:

1. Splice connection to the insert shall develop the 1.25 times the specified yield strength and the full tensile strength of the spliced bar.
2. Splices shall be approved by the ICC Evaluation Service, Inc. as expressed in an ICC Evaluation Service Report which shall be submitted for review.
3. The following are acceptable products (for use only with grade 60 bars):
    a. Lenton Form Saver; Erico Products, Inc.
    b. DB-SAE Dowel Bar Splicer; Dayton/Richmond, Inc.
    c. or other Engineer-approved product.

D. Hooked Anchorage Replacement: Reinforcing bar terminations shall be manufactured out of ASTM A 576 material and shall develop the full tensile strength of the bar when installed at the manufacturer's recommended depth.

1. The anchorage shall be approved by the ICC Evaluation Service Inc. as expressed in an ICC Evaluation Service Report which shall be submitted for review.
2. The following are acceptable products (for use only with grade 60 bars):
    a. Lenton Terminator; Erico Products, Inc.
    b. or other Engineer-approved product.

2.03 FABRICATION

A. Fabricate reinforcement, ACI 315R providing for concrete cover.

B. Locate reinforcing splices not indicated on Drawings at points of minimum stress. Indicate location of splices on shop drawings.

C. Weld reinforcing bars; with AWS D1.4.

PART 3 - EXECUTION

3.01 GENERAL

A. All designs shall be by a Professional Engineer, licensed in the State of Oklahoma, and having experience in steel design. Shop drawing submittals are to include the professional engineer's seal and dated signature.

B. Shop drawings to be prepared in accordance with ACI 315R.

C. Mill Certificates: Submit steel producer's certificates of mill analysis including physical and chemical analysis of reinforcing steel.

3.02 FABRICATION AND DELIVERY

A. Bending and Forming: Fabricate bars of indicated sizes and accurately form to shapes and lengths indicated and required, by methods not injurious to materials. Do not heat reinforcement for bending. Bars shall be free from injurious defects, have a workman-like finish with no excessive rust and/or pitting and have no unusual kinks or bends.

B. Marking and Shipping: Bundle reinforcement and tag in accordance with Section 7.4.5 of the CRSI "Manual of Standard Practice". Transport and store at site so as not to damage material. Keep sufficient supply of tested, approved and proper reinforcement at the site to avoid delays. Maintain reinforcing bars free of mud, dirt, grease, or other coating.

C. Repair of Epoxy-Coated Reinforcing: Repair cut and damaged epoxy coatings on fabricated reinforcing before delivery with epoxy repair coating according to ASTM D 3963

3.03 PLACING REINFORCEMENT

A. Comply with CRSI recommended practice for "Placing Reinforcing Bars", for details and methods of reinforcement placement and supports and as herein specified.

B. Before placing reinforcement and again before concrete is placed, clean reinforcement of loose rust and mill scale, earth, ice and other materials which reduce or destroy bond with concrete.

C. Accurately position, support and secure reinforcement against displacement by formwork, construction, or concrete placement operations. Locate and support reinforcing by chairs, runners, bolsters, spacers and hangers, as required. Exercise particular care to maintain proper distance and clearance between parallel bars and between bars and forms. Provide spreaders and spacers to hold steel in position. Support steel at proper height upon approved chairs.

D. Place reinforcement to obtain at least minimum coverages for concrete protection. Arrange, space, and

securely tie bars and bar supports to hold reinforcement in position during concrete placement operations. Set tie wires so ends are directed into concrete, not toward exposed concrete surfaces.

E. Support of Spread Footing Reinforcing Steel

1. Bottom Steel: Support bottom reinforcing mat to provide the specified clearance to the bars. Spacing between supports shall not exceed 4'-0" centers each way.

2. Top Steel: Support top reinforcing on steel angle frames braced in both directions or on special standee support bars. Spacing between supports shall not exceed 4'-0" centers each way. The depth of the supports shall provide the specified clearance from the bars to the top of the concrete. The design of the support steel shall be the responsibility of the Contractor in accordance with Concrete Reinforcing Steel Institute (CRSI), “Manual of Standard Practice”.

F. Support of Mat Foundation Reinforcing Steel

1. Bottom Steel: Support bottom reinforcing mat to provide the specified clearance to the bars. Spacing between supports shall not exceed 4'-0" centers each way.

2. Top Steel: Support top reinforcing on steel angle frames braced in both directions or on special standee support bars. Spacing between supports shall not exceed 4'-0" centers each way. The depth of the supports shall provide the specified clearance from the bars to the top of the concrete. The design of the support steel shall be the responsibility of the Contractor in accordance with Concrete Reinforcing Steel Institute (CRSI), “Manual of Standard Practice”.

G. Install welded wire reinforcement in as long lengths as practicable. Lap adjoining pieces at least one full mesh plus two inches and lace splices with wire. Offset end laps in adjacent widths to prevent continuous laps in either direction.

H. Coordinate with other trades and expedite materials and labor to avoid omissions and delay.

I. Install waterproof membrane or vapor barrier as specified prior to placing steel for concrete slabs-on-ground.

J. Extend reinforcement continuous through construction joints unless otherwise shown on the drawings.

K. Slab-on-Ground Joint Dowel Bars: Support slab-on-ground joint dowel bars independently of support for slab reinforcement on soil supported slab bolsters or specially manufactured cradles such that dowel bar remains parallel to slab surface and at right angles to joint during concreting operations. Lightly coat the exposed end of the dowel with a paraffin-base lubricant, asphalt emulsion, form oil, or grease or use a dowel bar sleeve.

L. Alternate Slab-on-Ground Joint Load Transfer Systems: Install the alternate load transfer system in accordance with the manufacturer’s instructions such that the largest plane of the flat plate is parallel to the plane of the subgrade on which the slab is bearing.

M. Provide and place additional reinforcing steel at all sleeves and openings in beams, slabs and walls as specified on the drawings. Where sleeves or openings not shown on the drawings interrupt the reinforcement, consult with Engineer for instructions for placing and splicing of bars. Provide required additional reinforcing steel at no additional cost to the Owner.

N. Epoxy-Coated Reinforcement: Use epoxy-coated steel tie wires to fasten epoxy-coated reinforcement. Repair cut and damaged epoxy coatings with epoxy repair coating according to ASTM D 3963.

O. Galvanized Reinforcement: Use galvanized steel tie wires to fasten galvanized reinforcement. Repair cut and damaged zinc coatings with zinc repair material.

3.04 SPLICING REINFORCING STEEL

A. Provide splice as indicated on the drawings. Splice reinforcing bars only at locations shown on the structural drawings and approved shop drawings. Unauthorized or unscheduled splices not approved by the Engineer in writing will not be accepted.

B. All lap splices in reinforcing steel shall be contact lap splices unless detailed otherwise on the drawings.

C. Maintain proper cover between reinforcing bars at splices.

D. Lap unscheduled reinforcing bars not otherwise specified a minimum of 30 bar diameters at splices. Lap welded wire fabric a minimum of one full wire mesh plus two inches.

E. Reinforcing Steel Placement in Mat Foundations

1. Size, length, spacing, and location of all mat reinforcing steel is shown on the mat plans and details. See details on the drawings for required stagger pattern of top and bottom bar splices and for sequence of placing mat reinforcing steel layers.

2. The number of splices shall be minimized by using bar runs of 60'-0" as much as possible. Unless noted otherwise, continuous top reinforcing bars shall be spliced along column centerlines. Continuous bottom reinforcing bars shall be spliced mid-way between columns.

3. Provide Class B tension lap splices for all bars #11 and smaller. Stagger splices as shown in the typical details.

4. Avoid splices of #14 and #18 bars where possible. Where required, a mechanical tension splice as specified shall be provided. No more that 50% of such bars shall be spliced in any 5'-0" width of mat cross-section. Spliced bars shall be staggered with un-spliced bars.

F. Manufacturer of mechanical tension splice shall be present for first day's installation.

3.05 WELDING REINFORCING STEEL

A. Welding reinforcing steel is permitted only where specifically shown on the drawings. All welding shall conform to AWS D1.4. Only weldable reinforcing steel conforming to ASTM A 706 or deformed bar anchors conforming to ASTM A 1064 shall be permitted. ASTM A 615 bars may not be welded for structural use.

B. Tack welding of reinforcement shall only be allowed for preassembled mats and cages.

3.06 SHRINKAGE AND TEMPERATURE REINFORCEMENT

A. Provide shrinkage and temperature reinforcement as indicated on the drawings or in this spec at right angles to main top and bottom bars for all structural slabs unless detailed otherwise on the drawings.

3.07 PLACEMENT OF WELDED WIRE REINFORCEMENT

A. Wherever welded wire reinforcement is specified as reinforcement in pan-formed beams or slabs, it shall be continuous and properly lapped one full wire spacing plus 2" across the entire concrete surface and not interrupted by beam or girders.

3.08 REINFORCEMENT IN JOIST DISTRIBUTION RIBS

A. Provide reinforcement in ribs, minimum one - #5 continuous top and bottom unless indicated otherwise on the drawings.

3.09 REINFORCEMENT IN COMPOSITE METAL DECK SLAB

A. Composite metal deck slabs shall be reinforced as indicated on the drawings.

B. Extra Reinforcement Over Girders: Provide additional reinforcing steel over interior girders as shown on the drawings.

C. Placement of Slab Reinforcement: Provide bolsters, high chairs, and/or additional reinforcing as shown in details on the drawings to support the reinforcing with the clear cover shown on the drawings.

3.10 FIBER-REINFORCED CONCRETE IN TOPPING SLABS, SIDEWALKS, AND DRIVEWAYS

A. Provide fibers of the type and at the dosage rate shown on the drawings or as follow:

B. The fiber-reinforced concrete shall be produced in accordance with ASTM C 1116.

C. The dosage of synthetic fibrillated microfibers shall be 1.5 lb/yd^3.

D. Recommended dosage of synthetic macrofibers shall provide an equivalent flexural strength ratio ($\boldsymbol{R^{150}_{T,150}}$ ***or*** $R_{e,3}$) of 20 percent when tested in accordance with ASTM C 1609/C 1609M, but shall not be less than 3 lb/yd^3.

3.11 REINFORCEMENT AROUND OPENINGS IN COMPOSITE METAL DECK SLABS

A. For all openings in metal deck not framed with structural steel and greater than 10" in width in either direction, provide additional reinforcing steel as shown in details on the drawings.

3.12 REINFORCEMENT IN PAN-FORMED BEAM SLABS

A. Reinforcement: Provide reinforcing in pan-formed beam slabs as shown on the drawings.

B. Placement of Slab Reinforcement: Provide required bar supports and additional reinforcing as shown in details on the drawings to support slab reinforcing with the clear cover shown on the drawings.

3.13 REINFORCEMENT IN GRADE BEAMS

A. Provide reinforcing in grade beams as shown on the drawings.

B. Bar Support for Grade Beam Cages: Grade beam bottom steel shall be supported at 5'-0" maximum centers using beam bolsters that provide 3" bottom cover to the reinforcing steel. Beam bolsters used shall be designed and manufactured for support on soil.

3.14 REINFORCEMENT IN TOPPING SLABS

A. In addition to fiber reinforcing, provide welded smooth wire reinforcement minimum 6 x 6 W1.4 x W1.4 in all topping slabs unless specified otherwise on the drawings.

3.15 REINFORCEMENT IN HOUSEKEEPING PADS

A. In addition to fiber reinforcing, provide welded smooth wire reinforcement 6 x 6 W2.9 x W2.9 minimum in all housekeeping pads supporting mechanical equipment unless detailed otherwise on the drawings.

3.16 REINFORCEMENT IN SIDEWALKS

A. In addition to fiber reinforcing, provide welded smooth wire reinforcement minimum 6 x 6 W1.4 x W1.4 in all sidewalks unless detailed otherwise in the Contract Documents.

3.17 MECHANICAL AND PLUMBING REQUIREMENTS

A. Refer to Mechanical and Plumbing Drawings for concrete requiring reinforcing steel. Such reinforcement shall be furnished as part of the work of this section.

3.18 QUALITY ASSURANCE TESTING AND INSPECTION DURING CONSTRUCTION

A. See Testing Laboratory Services section of these Specifications for reinforcing inspection and testing requirements.

END OF SECTION

PART 1 - GENERAL

1.01 RELATED DOCUMENTS

A. Drawings and general provisions of Contract, including General and Supplementary Conditions and Division-01 Specification sections, apply to work of this section.

1.02 DESCRIPTION OF WORK

A. Extent of concrete work is shown on drawings, including schedules, notes and details which show size and location of members and type of concrete to be placed. Furnish all labor, materials, services, equipment, and hardware required in conjunction with or related to the forming, delivery and placement of all cast-in-place concrete Work.

1.03 SECTION INCLUDES

A. Material requirements.

1.04 REFERENCES

(Current Edition at Date of Bid)

A. ACI 211.1: Standard Practice for Selecting Proportions for Normal, Heavyweight, and Mass Concrete.

B. ACI 211.2: Standard Practice for Selecting Proportions for Structural Lightweight Concrete.

C. ACI 211.3: Standard Practice for Selecting Proportions for No-Slump Concrete.

D. ACI 214R: Guide to Evaluation of Strength Test Results of Concrete.

E. ACI 301: Specifications for Structural Concrete.

F. ACI 305.1: Specification for Hot Weather Concreting.

G. ACI 306.1: Standard Specification for Cold Weather Concreting.

H. ACI 318: Building Code Requirements for Structural Concrete.

I. ASTM C 33: Standard Specification for Concrete Aggregates.

J. ASTM C 39: Standard Test Method for Compressive Strength of Cylindrical Concrete Specimens.

K. ASTM C 88: Standard Test Method for Soundness of Aggregates by Use of Sodium Sulfate or Magnesium Sulfate.

L. ASTM C 94: Standard Specification for Ready-Mixed Concrete.

M. ASTM C 117: Standard Test Method for Material Finer than 75µ (No. 200) Sieve in Mineral Aggregates by Washing.

N. ASTM C 138: Standard Test Method for Density (Unit Weight), Yield, and Air Content (Gravimetric) of Concrete.

O. ASTM C 143: Standard Test Method for Slump of Hydraulic-Cement Concrete.

P. ASTM C 150: Standard Specification for Portland Cement.

Q. ASTM C 172: Standard Method of Sampling Freshly Mixed Concrete.

S. ASTM C 231: Standard Test Method for Air Content of Freshly Mixed Concrete by the Pressure Method.

T. ASTM C 260: Standard Specification for Air-Entraining Admixtures for Concrete.

V. ASTM C 295: Standard Guide for Petrographic Examination of Aggregates for Concrete.

W. ASTM C 441: Standard Test Method for Effectiveness of Pozzolans or Ground Blast-Furnace Slag in Preventing Excessive Expansion of Concrete Due to The Alkali-Silica Reaction.

X. ASTM C 494: Standard Specification for Chemical Admixtures for Concrete.

Y. ASTM C 595: Standard Specification for Blended Hydraulic Cements.

Z. ASTM C 618: Standard Specification for Fly Ash and Raw or Calcined Natural Pozzolan for Use in Concrete.

AA. ASTM C 1064: Standard Test Method for Temperature of Freshly Mixed Hydraulic-Cement Concrete.

AB. ASTM C 1077: Standard Practice for Agencies Testing Concrete and Concrete Aggregates for Use in Construction and Criteria for Testing Agency Evaluation.

AC. ASTM C 1116: Standard Specification for Fiber-Reinforced Concrete.

AD. ASTM C 1157: Standard Performance Specification for Blended Hydraulic Cement.

AE. ASTM C 1240: Standard Specification for Use of Silica Fume as a Mineral Admixture in Hydraulic Cement

Concrete, Mortar, and Grout.

AF. ASTM C 1260: Standard Test Method for Potential Alkali Reactivity of Aggregates (Mortar-Bar Method).

AG. ASTM C 1293: Standard Test Method for Concrete Aggregates by Determination of Length Change of Concrete Due to Alkali-Silica Reaction.

AH. ASTM C 1567: Standard Test Method for Determining the Potential Alkali-Silica Reactivity of Combinations of Cementitious Materials and Aggregate (Accelerated Mortar-Bar Method).

AI. ASTM C 1602: Standard Specification for Mixing Water Used in The Production of Hydraulic Cement Concrete.

AJ ASTM C 1778: Standard Guide for Reducing the Risk of Deleterious Alkali-Aggregate Reaction in Concrete

1.05 SUBMITTALS

A. Quality Assurance: Submit names, certification levels, and years of experience of testing agency's laboratory and field technicians that are assigned to the Work. Verify laboratory complies with ASTM and ACI standards.

B. Mix Design: Submit.

1. Date of mix design. If older than 365 days, recertify mix design.
2. Mix design number or code designation by which the Contractor shall order the concrete from the Supplier.
3. Structural slab or member for which the concrete is designed (i.e., columns, shear walls, footings, slab on ground, etc.).
4. Cement source, type and chemical composition.
5. Aggregate soundness and potential reactivity.
6. 28-day compressive strength.
7. Fly ash or other pozzolan type and brand (if any).
8. Admixtures including air entrainers, water reducers, high-range water reducers, accelerators, and retarders.
9. Allowable range of slump and air content.
10. Water-cementitious materials ratio and maximum allowable water content.
11. Proportions of materials in the mix.
12. Wet and Dry unit Density.
13. Analysis of water if water is not potable.
14. Mortar bar test results if a pozzolan is included in the mix.
15. Method by which the concrete is intended to be placed (bucket, chute, or pump).
16. Technical data sheets for additives to be used at the plant and at the job site. Certify additives are compatible with each other.
17. Required average strength qualification calculations per ACI 301. Submit separate qualification calculations for each production facility that will supply concrete to the project.
18. Documentation of Average strength (trial mix data or field test data) per ACI 301: When field test data is used to qualify average strength, submit separate documentation for each production facility that will supply concrete to the project.
19. Field test data submitted for qualification of average strength under ACI 301 shall include copies of the Concrete Testing Laboratory's reports from which the data was compiled.
20. All other information requested in the Concrete Mix Design Submittal Form located at the end of this specification section.

C. Pre-approved mix design, submit name and address of Supplier.

D. Before changing mix design, submit a new design and give ENGINEER 10 days to evaluate the changes.

E. Construction Joints: Submit drawing of proposed construction joint locations in concrete for slab on ground, mat foundations, structural floors, roofs and walls. Submit any additional or changed reinforcing that is required at construction joints that differs from that shown on the drawings.

F. Placement Sequence for Mat Foundation: Submit proposed placement sequence for mat foundations.

G. Industrial Slabs: Submit proposed placement sequence and procedure for protecting concrete during placement, finishing, and curing.

H. Source Quality Control Inspections and Testing Report: If requested, submit report describing

CONTRACTOR's and Supplier's quality control activities and test results.

1.06 QUALITY ASSURANCE

A. The concrete supplier shall have a minimum of five years' experience in manufacturing ready-mixed concrete products complying with ASTM C 94 requirements for production facilities and equipment. The supplier must be certified according to the National Ready Mixed Concrete Association's Certification of Ready Mixed Concrete Production Facilities.

B. The concrete contractor shall have a minimum of five years' experience with installation of concrete similar in material, design and extent to that indicated for this Project and whose work has resulted in construction with a record of successful –service performance.

C. Use a laboratory that follows and complies with ASTM C 1077.

D. Reject concrete that does not meet requirements of this section.

E. Do not change material sources, type of cement, air-entraining admixture, water reducing admixture, other admixtures except as allowed by mix design.

F. Store bagged and bulk cement in weatherproof enclosures. Exclude moisture and contaminants.

G. Prevent segregation and contamination of aggregate stockpiles.

H. Avoid contamination, evaporation, or damage to admixtures. Protect liquid admixtures from freezing.

I. Use of admixtures will not relax hot or cold weather placement requirements.

1.07 QUALITY CONTROL

A. The Contractor is responsible for control of quality, including workmanship and materials furnished by his subcontractors and suppliers.

B. Codes and Standards: Comply with provisions of following codes, specifications and standards, except where more stringent requirements are shown or specified:

1. ACI 301 – "Specifications for Structural Concrete".
2. ACI 117 – "Specification for Tolerances for Concrete Construction and Materials."
3. ACI 318 – "Building Code Requirements for Structural Concrete".
4. Concrete Reinforcing Steel Institute (CRSI), "Manual of Standard Practice".
5. Steel Construction Manual, 13th edition, American Institute of Steel Construction

C. Document Conflict and Precedence: In case of conflict among Contract Documents and Contract Specifications, request clarification from the Architect/Engineer through "Request for Information" (RFI) process before proceeding with the Work. In case of a conflict between and/or among the structural drawings and specifications, the strictest interpretation shall govern, unless specified otherwise in writing by the Architect/Engineer.

D. Manufacturer Representative Presence:

1. Post-installed anchors: The manufacturer's representative for each post-installed anchor product (adhesive, expansion, undercut, screw, or insert anchor) shall be present during the first day's installation of the product to observe whether the anchors are installed according to manufacturer's instructions.
2. Fiber-reinforced concrete: The manufacturer's representative for each fiber type shall be present during the first placement in which the fiber is used to observe whether the dosage rate and placing and finishing method is in accordance with the specifications and the manufacturer's instruction.

1.08 PROVISION FOR OTHER WORK

A. Provide for installation of inserts, hangers, metal ties, anchors, bolts, angle guards, dowels, thimbles, slots, nailing strips, blocking, grounds and other fastening devices required for attachment of work. Properly locate in cooperation with other trades and secure in position before concrete is placed. Do not install sleeves or blockouts in any concrete slabs, beams or columns except where shown on the drawings or upon written approval of the Architect/Engineer.

B. Protect adjacent finish materials against damage and spatter during concrete placement.

C. To maintain location accuracy, building control lines and elevation bench marks shall be furnished for the use of all trades.

1.09 ACCEPTANCE

A. Materials:

1. At the Source: Verify aggregate gradation. Determine percent of combined aggregate passing No. 200 sieve.

2. At the Site: Verify mix identification, batch time, slump, air content, density, and temperature.

3. At the Laboratory: Verify strength in 28 days.

B. Placement:

1. Concrete in general, Section 03 30 10.

2. Pavement, Section 32 13 13.

C. Defective Material:

1. Price adjustment, Section 01 22 00.

PART 2 - PRODUCTS

2.01 CONCRETE MATERIALS

A. Refer to the drawings and other related specification sections for classes and strengths of concrete required, not all listed materials used in the project.

B. Hydraulic Cement:

1. Use ASTM C 150, Type I, Type I/II or Type III, or ASTM C 1157, Type GU or HE unless otherwise specified. Do not use Type III cement in slabs on ground unless approved in advance by the Architect and Engineer.

2. Use one brand of cement, for each class of concrete, throughout the project, unless approved otherwise by the Architect/Engineer and the Owner's Testing Laboratory. Submit mill certificates certifying conformance to this specification for each brand and type of cement. Documentation of design mix strength history must match the cement brand used.

3. Testing of cement in lieu of mill certificate submittal will be required if:

a. The cement has been in storage at the mixing site for over 30 days

b. It is suspected by the Owner, Architect, Engineer or Testing Laboratory that the cement has been damaged in storage or in transit or is in any way defective.

C. Low-alkali cement: Cement that has the additional requirement that equivalent alkalis (Na2O + 0.658K2O) do not exceed 0.60% according to ASTM C 150, Table 2.

D. Expansive Cement: ASTM C 845, Type K.

E. Supplementary Cementitious Materials (SCM).

1. Fly Ash: ASTM C 618, Class C or F.

2. Silica Fume: ASTM C 1240, Amorphous silica. Products:

a. MasterLife SF 100; Master Builders Solutions US LLC.

3. Slag Cement: ASTM C 989, Grade 100 or 120 or ASTM C 595, Type IS or Type S.

4. Metakaolin: ASTM C618, Class N. Products:

a. MetaMax; BASF Kaolin (part of BASF Corporation).

F. Normal weight Aggregates: ASTM C 33, and as herein specified. Submit material certificates from aggregate supplier or test results from an independent testing Laboratory certifying conformance to this specification for each source of aggregate.

G. Lightweight Aggregates: ASTM C 330. Submit material certificates from aggregate supplier or test results from an independent testing Laboratory certifying conformance to this specification for each source of aggregate.

H. Water: Comply with the requirements of ASTM C 1602

I. Cementitious materials, aggregate, and water must be extracted or recovered as well as manufactured within 500 miles of the project site.

J. For each admixture type listed below, and subject to compliance with requirements, provide one of the products and manufacturers following the admixture type.

K. For each admixture type listed below, submit manufacturer's certification that the product conforms to the requirements specified and is compatible with all other admixtures to be used.

L. Air-Entraining Admixture: ASTM C 260.

1. Products:

a. Darex or Daravair series; W. R. Grace & Co.

b. MasterAir Series; Master Builders Solutions US LLC.

c. Sika AER; Sika Corporation.

d. Air Mix or AEA-92; the Euclid Chemical Company.

e. Eucon Air 30 or Eucon Air 40; the Euclid Chemical Company.

M. Water-Reducing Admixture: ASTM C 494, Type A.

1. Products:

a. MasterPozzolith Series or MasterPolyheed Series; Master Builders Solutions US LLC.

b. Plastocrete 161; Sika Chemical Corp.

c. Eucon WR-75 or WR-91; The Euclid Chemical Company.

d. WRDAseries; W.R. Grace & Co.

e. Eucon NW or Eucon LW; The Euclid Chemical Company.

N. Mid-Range Water-Reducing Admixture: ASTM C 494, Type A and Type F.

1. Products:

a. MasterPolyheed Series; Master Builders Solutions US LLC.

b. Eucon MR; The Euclid Chemical Company

c. Sikament HP; Sika Chemical Corp.

d. Daracem or Mira series; W.R. Grace & Co.

e. Eucon X15 or Eucon X20; The Euclid Chemical Company.

Q. Retarding Admixture: ASTM C 494, Type B.

1. Products:

a. MasterSet R Series or MasterSet DELVO Series; Master Builders Solutions US LLC.

P. Accelerating Admixture (Non-Corrosive, Non-Chloride): ASTM C 494, Type C.

1. Products:

a. Polarset, Gilco, Lubricon NCA or DCI; W.R. Grace & Co.

b. MasterSet AC 534 or MasterSet FP 20; Master Builders Solutions US LLC.

c. Accelguard 80/90, NCA or AcN; The Euclid Chemical Company.

d. Plastocrete 161FL; Sika Chemical Co.

e. Eucon AcN; The Euclid Chemical Company.

Q. Water-Reducing, Retarding Admixture: ASTM C 494, Type D.

1. Products:

a. Daratard series; W.R. Grace & Co.

b. MasterSet R Series or MasterSet DELVO Series; Master Builders Solutions US LLC.

c. Plastiment; Sika Chemical Co.

d. Eucon Retarder Series; The Euclid Chemical Company.

R. Water-Reducing, Accelerating Admixture: ASTM C 494, Type E.

1. Products:

a. MasterSet FP 20; Master Builders Solutions US LLC.

b. Accelguard 80/90, NCA or AcN; The Euclid Chemical Company.

c. Plastocrete 161FL; Sika Chemical Co.

d. Eucon AcN; The Euclid Chemical Company.

S. High-Range Water-Reducing Admixture (superplasticizer): ASTM C 494, Type F or Type G.

1. Products:

a. ADVA or Daracem Series; W.R. Grace & Co.

b. MasterRheobuild 1000 or MasterGlenium Series; Master Builders Solutions US LLC.

c. Sikament; Sika Chemical Corp.

d. Eucon 37/1037 or Plastol series; The Euclid Chemical Company.

e. Euconl SP or Eucon RD; The Euclid Chemical Company.

U. Workability-Retaining Admixture: ASTM C 494, Type S. Shall retain concrete workability without affecting time of setting or early-age strength development.

1. Products:

a. MasterSure Z 60; Master Builders Solutions US LLC.

T. Viscosity Modifying Admixture: Used to enhance plastic concrete properties such as workability, pumpability, and stability for “self-consolidating concrete”.

1. Products:

a. MasterMatrix VMA Series; Master Builders Solutions US LLC.

b. Eucon SL or Visctrol; The Euclid Chemical Company.

c. VisoCrete series; Sika Chemical Co.

d. VMAR series; W.R. Grace & Co.

W. Shrinkage Reducing Admixture: An admixture that reduces drying shrinkage by reducing the capillary tension of pore water. ASTM C 494, Type S.

1. Products:

a. For Air-Entrained Concrete:

1). MasterLife SRA Series or MasterLife CRA 007; Master Builders Solutions US LLC.

2). Eclipse Plus; Grace Construction Products.

3). Eucon SRA; The Euclid Chemical Company.

b. For Non-Air-Entrained Concrete:

1). Eclipse Floor; Grace Construction Products.

2). MasterLife CRA 007; Master Builders Solutions US LLC.

X. Corrosion Inhibitor: 30% calcium nitrite. ASTM C 494, Type C.

1. Products: Provide the following at dosage rates per Engineer of Record from manufacturer’s recommendation based on design life, application, clear cover and other products in concrete mix:

a. Eucon CIA or Eucon BCN; the Euclid Chemical Company.

b. DCI or DCI-S; W.R. Grace & Co.

c. MasterLife CI 30; Master Builders Solutions US LLC.

d. Sika CNI; Sika Chemical Co.

Y. Corrosion Inhibitor: Amine-Ester type. ASTM C 494, Type S.

1. Products: Provide the following at dosage rates per manufacturer’s recommendation:

a. MasterLife CI 222; Master Builders Solutions US LLC.

Z. Alkali-Silica Reaction-Inhibiting Admixture: ASTM C 494, Type S. Shall contain a nominal lithium nitrate content of 30 percent.

1. Products:

a. MasterLife ASR 30; Master Builders Solutions US LLC.

AA. Crystalline-forming Waterproofing Admixture: A powder admixture capable of producing concrete that is water tight under hydrostatic pressure up to 7 atmospheres when tested in accordance with Corps of Engineers test CRD-C48 and capable of sealing cracks up to 0.4mm.

1. Products: Provide the following at dosage rates per manufacturer’s recommendation:

a. Penetron Admix; ICS/Penetron International/Ltd.

b. Krystol Internal Membrane; Kryton International, Inc.

c. Xypex C series; Xypex Chemical Corporation.

d. MasterLife 300 Series; Master Builders Solutions US LLC.

AB. Calcium Chloride and Chloride Ion Content: Calcium chloride or admixtures containing intentionally-added chlorides are not permitted. For concrete exposed to sulfate exposure class S2 or S3 as noted on the drawings, admixtures must be completely free of chloride ions.

AC. Certification: Written conformance to all the above-mentioned requirements and the chloride ion content of the admixture as tested by an accredited laboratory will be required from the admixture manufacturer at the time of mix design review by the Engineer.

AD. Fibers:

1. Synthetic Microfibers: Monofilament or fibrillated polypropylene microfibers engineered and designed for use in concrete, complying with ASTM C 1116, Type III. Products:

a. MasterFiber M Series or MasterFiber F Series; Master Builders Solutions US LLC.

2. Synthetic Macrofibers: Synthetic macrofibers engineered and designed for use in concrete as

temperature and shrinkage reinforcement, complying with ASTM C1116, Type III. Products:

a. MasterFiber MAC Series; Master Builders Solutions US LLC.

2.02 RELATED MATERIALS

A. Waterstops: Provide waterstops at all construction joints and other joints in all foundation walls below grade and where shown on the drawings. Size to suit joints. Provide flat, dumbbell type or center bulb type where shown on drawings.

1. ADCOR ES waterstops: W.R. Grace & Co.
2. Polyvinyl chloride (PVC) waterstops: Corps of Engineers CRD-C 572.
3. Preformed Plastic Waterstops: Federal Specifications SS-S-210A "Sealing Compound for Expansion Joints".
   a. Manufacturers: Synko-Flex Products, Inc.
4. Bentonite Waterstop RX manufactured by American Volclay Products.

B. Absorptive Cover: Burlap cloth made from jute or kenaf, weighing approximately 9 oz. per sq. yd., complying with AASHTO M 182, Class 2.

C. Moisture-Retaining Cover: One of the following, complying with ANSI/ASTM C 171:

1. Waterproof paper.
2. Polyethylene film.
3. Polyethylene-coated burlap.
4. Polyethylene-coated natural cellulose fabric such as “Aquacure” by Greenstreak Group, Inc.
5. Cover for Industrial Slab: Provide a low permeance moisture-retaining cover that allows a moisture loss of no more than 1 lb/sq. yd. in 72 h when tested in accordance with ATSM C 156 for industrial slabs. The material shall be nonstaining with a tensile strength meeting ASTM D 882 and a minimum retention capacity of 6.5 g.

D. Slip-resistive Emery Aggregate or Aluminum Granule Finish: Provide fused aluminum-oxide granules, or crushed emery, as abrasive aggregate for slip-resistive finish. The emery aggregate shall contain not less than 50% aluminum oxide and not less than 20% ferric oxide. The aluminum aggregate material shall contain not less than 95% fused aluminum-oxide granules. Use material that is factory-graded, packaged, rust-proof and non-glazing, and is unaffected by freezing, moisture and cleaning materials.

1. Subject to compliance with requirements, provide one of the following:
   a. Emery Tuff Non-Slip; Dayton-Superior.
   b. Grip-It or Grip-It AO; L&M Construction Chemicals, Inc.
   c. MasterTop 120 SR; Master Builders Solutions US LLC.

E. Colored, Mineral Aggregate, Dry Shake Surface Hardener: Packaged, dry, combination of materials, consisting of portland cement, graded quartz aggregate, coloring pigments (if required) and plasticizing admixtures. Use coloring pigments that are finely ground, non-fading mineral oxides, interground with cement. Color, as selected by Architect, unless otherwise indicated.

1. Products: Subject to compliance with requirements, provide one of the following:
   a. Surflex; the Euclid Chemical Company.
   b. Quartz Plate; L & M Const. Chemical Co.
   c. Lithochrome; LM Scofield Construction Chemical Co.
   d. MasterTop 100; Master Builders Solutions US LLC.
   e. Quartz-Tuff; Dayton Superior.
   f. US Spec Dense Top; US Mix Co.
2. Submit manufacturer's certification that product conforms to the requirements specified.

F. Bonding Compound: Polyvinyl acetate or acrylic base, for use in cosmetic and/or nonstructural repairs.

1. Use type I in areas not subject to high humidity or immersion in water with minimum bond strength of 400 psi.
2. Use type II in areas subject to high humidity or immersion in water with minimum bond strength of 1250 psi.
3. Products: Subject to compliance with requirements, provide one of the following:
   a. Acrylic or Styrene Butadiene:
      1). Day-Chem Ad Bond (J-40); Dayton Superior.

2). SBR Latex; The Euclid Chemical Company.
3). Daraweld C; W. R. Grace.
4). MasterEmaco A 400; Master Builders Solutions US LLC.
5). MasterEmaco A 660; Master Builders Solutions US LLC.
6). SikaLatex; Sika Chemical Co.
7). Intralok; W. R. Meadows.
8). US Spec Acrylcoat; US Mix Co.
9). Akkro 7-T; the Euclid Chemical Company.

b. Polyvinyl Acetate (Interior Use Only)
1). Tammseld; the Euclid Chemical Company.
2). Everweld; L & M Construction Chemicals, Inc.
3). Superior Concrete Bonder (J-41); Dayton Superior.
4). US Spec Bondcoat; US Mix Co.

G. Epoxy Products: Two component material suitable for use on dry or damp surface, complying with ASTM C 881.

1. Products for Crack Repair:
a. Sikadur 35 Hi Mod LV"; Sika Chemical Company – injection type.
b. Sikadur 52; Sika Chemical Company – injection type.
c. Sikadur 55 SLV; Sika Chemical Company – gravity feed.
d. Eucopoxy Injection Resin," the Euclid Chemical Company.
e. Sure-Inject (J-56)," Dayton Superior.
f. MasterEmaco ADH 326; Master Builders Solutions US LLC.
g. MasterInject 1380 (injection or gravity feed); Master Builders Solutions US LLC.
h. MasterEmaco ADH 327 RS; Master Builders Solutions US LLC.
i. MasterEmaco ADH 1090 RS; Master Builders Solutions US LLC.
j. ETI-LV" or "ETI-GV; Simpson Strong-Tie Co., Inc. – injection type
k. Pro-Poxy 100 LV" or "Pro-Poxy 50; Unitex
l. Crackbond; U.S. Anchor Corp.
m. Rezi-Weld LV; W. R. Meadows.
n. US Spec Maxibond" US Mix Co. – injection or gravity feed.
o. US Spec Eposeal LVS; US Mix Co. – gravity feed.
p. Duralcrete LV; the Euclid Chemical Company.

2. Products for Epoxy Mortar Patches:
a. MasterEmaco ADH 1090 RS; Master Builders Solutions US LLC.
b. MasterSeal 350; Master Builders Solutions US LLC.
c. Sikadur Lo-Mod LV; Sika Chemical Corporation.
d. Duracrete; the Euclid Chemical Company.
e. Sure Grip Epoxy Grout (J-54)," Dayton-Superior.
f. Epofil; BASF Building Systems.
g. Pro-Poxy 2500; Unitex.
h. Rezi-Weld 1000; W. R. Meadows.
i. US Spec EPM 3000; US Mix Co.
j. Duralcrete LV; the Euclid Chemical Company.

3. Products for Epoxying steel plates to concrete: conform to ASTM C 881-90, Type IV, Grade 3, Class A, B, & C except gel times.
a. MasterEmaco ADH 327 RS; Master Builders Solutions US LLC.
b. Sikadur 31 Hi-Mod Gel; Sika Corporation
c. Sure Anchor I (J-S1); Dayton Superior

d. Epo Gel or Rapid Gel; BASF Building Systems

e. Pro-Poxy 300; Unitex

f. US Spec Gelbond NS; US Mix Co.

g. Duralcrete Gel; The Euclid Chemical Company.

4. Products for Adhesive Anchors or Reinforcing Steel in Normal weight Concrete. Product that conforms to ASTM C 881-02, Type IV, Grade 3, Class A, B, & C except gel times, and that is dispensed from a two-component cartridge system through a mixing nozzle that thoroughly mixes the two components as it is injected into the hole.

a. ICC Approval: Only anchors evaluated by the ICC Evaluation Service, Inc. (ICC-ES) with a published, currently valid, Evaluation Report showing it as having passed Acceptance Criteria 308 shall be approved for use.

b. Consult with the manufacturer for the minimum temperature of the concrete substrate allowed.

c. All anchors installed upwardly inclined require continuous inspection unless an exception to the continuous special inspection for upwardly inclined installation is noted on the drawings.

d. Normal weight Concrete:

1). HIT-RE 500-SD; Hilti Fastening Systems (periodic inspection unless anchors are installed upwardly inclined)

2). SET-XP Adhesive; Simpson Strong-tie (periodic inspection unless higher factors are used in design requiring continuous inspection as noted on the drawings or anchors are installed upwardly inclined)

3). PE 1000+; Powers Fasteners, Inc. (periodic inspection unless anchors are installed upwardly inclined)

4). HIT-HY 150 MAX-SD", Hilti Fastening Systems (periodic inspection unless anchors are installed upwardly inclined)

e. Lightweight Concrete:

1). No approved products.

f. These products may not be used in concrete cast over corrugated deck.

g. Install only anchors identified on the drawings by manufacturer and product. Substitutions using products approved by this Specification may be permitted provided complete design calculations, as required by and in accordance with the proposed product's current and valid ICC Evaluation Service Report (ESR) and ACI 318 Appendix D, are signed and sealed by a professional engineer licensed in the state of Oklahoma and furnished to the Engineer for review and approval prior to commencement of work. The contractor shall request design criteria for all conditions where a product substitution is considered. Failure to obtain approval for an anchor substitution may result in the request by the Engineer to remove installed anchors and replace with the product specified on the drawings at the Contractor's expense.

H. Self-Leveling Mortars, Underlayment Compound: Free flowing, self-leveling, pumpable cementitious base compound. Follow manufacturer's instruction regarding the use of a bonding agent.

1. Products: Unless specified otherwise, provide one of the following:

a. MasterTop 110 SL; Master Builders Solutions US LLC.

b. Sikatop 111; Sika Chemical Co.

c. Flo-Top or "Super Flo-Top; the Euclid Chemical Company.

d. Levelayer I; Dayton Superior.

e. US Spec Self-leveling Underlayment; US Mix Co.

f. Level Magic; the Euclid Chemical Company.

I. Polymer Patching Mortar: Polymer and microsilica modified cementitious based compounds.

1. Horizontal Application

a. Thin Top Supreme, Concrete Top Supreme; the Euclid Chemical Company

b. Sikatop 121 or 122; Sika Chemical

c. MasterEmaco T 310 CI; Master Builders Solutions US LLC

d. MasterEmaco N 420 CI; Master Builders Solutions US LLC

e. US Spec H2 or NuTop; US Mix Co.

Speed Crete PM; the Euclid Chemical Company

2. Upwardly Inclined Application

a. Verticoat/Verticoat Supreme; the Euclid Chemical Company

b. Sikatop 123; Sika Chemical

c. MasterEmaco N 425; Master Builders Solutions US LLC

d. MasterEmaco N 420 CI; Master Builders Solutions US LLC

e. US Spec V/O Patch; US Mix Co.

f. Speed Crete PM; the Euclid Chemical Company

J. High Strength Flowing Repair Mortar: For forming and placing structural members, or large horizontal repairs, provide flowable one-part, high strength microsilica polymer modified repair mortar with 3/8" aggregate. The product shall achieve 9000 psi @ 28-days at a 9-inch slump.

1. Products: Unless specified otherwise, provide one of the following:

a. MasterEmaco S 466 CI; Master Builders Solutions US LLC

b. US Spec STR Mortar; US Mix Co.

c. Eucocrete; the Euclid Chemical Company

d. Form and Pour, the Euclid Chemical Company

K. Anti-Corrosive Epoxy/Cementitious Adhesive: Water-based epoxy/cementitious compound for adhesion and corrosion protection or reinforcing members (20 hour maximum open time).

1. Products: Unless specified otherwise, provide one of the following:

a. Duralprep A.C; the Euclid Chemical Company

b. Armatec 110; Sika Chemical Co.

c. MasterEmaco P 124; Master Builders Solutions US LLC

L. Expansion and Undercut Anchors in Concrete:

1. ICC Approval: Only anchors evaluated by the ICC Evaluation Service, Inc. (ICCES) with a published, currently valid, Evaluation Report showing it as having passed Acceptance Criteria 193 and approval for use in cracked concrete and resisting wind and seismic loads shall be approved for use.

2. Type: All expansion and undercut anchors in concrete shall be only wedge type expansion, sleeve-type expansion, or undercut type anchors.

3. Interior Use: All anchors, nuts and washers for use in interior conditioned environments free of potential moisture shall be manufactured from carbon steel zinc plated in accordance with Federal Specification QQ-Z-325C, Type II, Class 3.

4. Exterior or Exposed Use: All anchors, nuts and washers for use in exposed or potentially wet environments, or for attachment of exterior cladding materials shall be galvanized or stainless steel. Galvanized anchors, nuts and washers shall conform to ASTM A 153. Stainless steel anchors shall be manufactured from 300 series stainless steel and nuts and washers from 300 series or Type 18-8 stainless steel.

5. Nuts and Washers: Nuts and washers shall be furnished from the manufacturer and used with the anchors.

6. Acceptable Products and Manufacturers – Normal and Lightweight Concrete:

a. Kwik Bolt TZ; Hilti Fastening Systems (periodic inspection)

b. HDA Undercut Anchor; Hilti Fastening Systems (continuous inspection)

c. HSL-3 Heavy Duty Sleeve Anchor; Hilti Fastening Systems (continuous inspection)

d. Strong-Bolt Wedge Anchor; Simpson Strong-Tie, Co., Inc. (continuous inspection)

e. Red Head Trubolt + Wedge Anchor; ITW Red Head (periodic inspection)

f. DUC Undercut Anchor; USP Structural Connectors (continuous inspection)

g. Power Stud + SD1; Powers Fasteners, Inc (periodic inspection)

h. Power Stud + SD2; Powers Fasteners, Inc (periodic inspection)

i. SRS TZ Carbon Steel Anchor; MKT Metall-Kunststoff-Technik (continuous inspection)

7. Acceptable Products and Manufacturers – Normal and Light Weight Concrete on Corrugated Deck:

a. Kwik Bolt TZ; Hilti Fastening System (periodic inspection)

b. Strong-Bolt Wedge-Anchor; Simpson Strong-Tie, Co, Inc. (continuous inspection)

c. Power Stud + SD2; Powers Fasteners, Inc. (periodic inspection)

8. Install only anchors identified on the drawings by manufacturer and product. Substitutions using products approved by this Specification may be permitted provided complete design calculations, as required by and in accordance with the proposed product's current and valid ICC Evaluation Service Report (ESR) and ACI 318 Appendix D, are signed and sealed by a professional engineer licensed in the state where the project is located and furnished to the Engineer for review and approval prior to commencement of work. The contractor shall request design criteria for all conditions where a product substitution is considered. Failure to obtain approval for an anchor substitution may result in the request by the Engineer to remove installed anchors and replace with the product specified on the drawings at the Contractor's expense.

M. Screw and Insert Anchors in Concrete

1. Approvals: Only anchors evaluated by the ICC Evaluation Service, Inc. (ICC-ES) with a published, currently valid, Evaluation Report showing it as having passed Acceptance Criteria 193 and approved for use in cracked concrete and resisting wind and seismic loads shall be approved for use.

2. Interior Use: All screw anchors for use in interior conditioned environments free of potential moisture shall be manufactured from carbon steel zinc plated in accordance with Federal Specification QQ-Z-325C, Type II, Class 3.

3. Exterior or Exposed Use: All screw anchors for use in exposed or potentially wet environments, or for attachment of exterior cladding materials shall be galvanized or stainless steel. Galvanized anchors shall conform to ASTM A 153. Stainless steel anchors shall be manufactured from 300 series stainless steel.

4. Acceptable Products and Manufacturers – All Conditions:

a. Titen HD; Simpson Strong-Tie Co., Inc (continuous inspection)

b. Snake+Anchor; Powers Fasteners, Inc. (periodic inspection)

c. Wedge-Bolt+; Powers Fasteners, Inc. (greater than ¼ in. diameter) (periodic inspection)

5. Install only anchors identified on the drawings by manufacturer and product. Substitutions using products approved by this Specification may be permitted provided complete design calculations, as required by and in accordance with the proposed product's current and valid ICC Evaluation Service Report (ESR) and ACI 318 Appendix D, are signed and sealed by a professional engineer licensed in the state of Texas and furnished to the Engineer for review and approval prior to commencement of work. The contractor shall request design criteria for all conditions where a product substitution is considered. Failure to obtain approval for an anchor substitution may result in the request by the Engineer to remove installed anchors and replace with the product specified on the drawings at the Contractor's expense.

N. Threaded Rods Chemically Anchored in Concrete

1. Type: Threaded rods installed in holes using a chemical anchoring process shall have a 45º chiseled end on one end.

2. Interior and Exterior Application: Meet the requirements of ASTM A 153 galvanized steel, or F 593, Group 1 or 2, condition CW stainless steel.

O. Anchor Rods:

1. All anchor rods shall conform to the ASTM designation and shall be of the yield strength as specified below as appropriate for the types and at the locations as specified on the drawings:

a. ASTM F 1554, Grade 36 (1/4 inch to 4 inches in diameter).

b. ASTM F 1554, Grade 55 (1/4 inch to 4 inches in diameter). (Also comply with Supplementary Requirement S1 of ASTM F 1554)

c. ASTM F 1554, Grade 105 (1/4 inch to 3 inches in diameter.

d. ASTM A 588 (corrosion resistant).

e. ASTM A 354 Grade BD, 130 ksi (to 2 ½ inches in diameter).

f. ASTM A 354 Grade BD, 115 ksi (greater than 2 ½ inches to 4 inches in diameter).

g. ASTM A 354 Grade BC, 109 ksi (to 2 ½ inches in diameter).

h. ASTM A 354 Grade BC, 99 ksi (greater than 2 ½ inches to 4 inches in diameter).

2. Anchor rods used with ASTM A 588 base plates shall be threaded round stock conforming to ASTM

A 588, grade 50.

3. Anchor rods used with ASTM A 588 base plates shall be threaded round stock conforming to ASTM A 588, grade 50.
4. Anchor rods used with galvanized base plates shall be galvanized.
5. Nuts: All nuts with anchor rods shall be heavy hex head conforming to ASTM A 563.
6. Washers: Unless noted otherwise on the drawings, washer size and thickness for all anchor rods shall conform to Table 14-2 of AISC “Steel Construction Manual” with holes 1/16” greater than the anchor rod diameter. Washers shall conform to ASTM A 36 steel.

P. Non-Shrink Grout:

1. Type: Grout for base plates, bearing plates and grouting under precast or tilt-up wall panels shall be a non-metallic, shrinkage resistant, premixed, non-corrosive, non-staining product containing Portland cement, silica sands, shrinkage compensating agents and fluidity improving compounds.
2. Specifications: Non-shrink grout shall conform to ASTM C 1107.
3. Compressive Strength: Provide the minimum strength as shown below as determined by grout cube tests at 28 days:
    a. 6,000 PSI for supporting concrete 3000 psi and less.
    b. 8,000 PSI for supporting concrete greater than 3000 psi and less than or equal to 4000 psi.
    c. Unless noted otherwise on the drawings, grout strength on supporting concrete greater than 4000 psi shall be 8000 psi.
4. Products: Acceptable non-shrink grouts are listed below:
    a. Crystex; L & M Construction Chemicals, Inc.
    b. MasterFlow 713; Master Builders Solutions US LLC.
    c. MasterFlow 555; Master Builders Solutions US LLC.
    d. MasterFlow 100; Master Builders Solutions US LLC.
    e. Five Star Grout; U. S. Grout Corp.
    f. NS Grout; the Euclid Chemical Company
    g. Sure-Grip High Performance Grout; Dayton Superior Corp.
    h. CG 200 PC; Hilti, Inc.
    i. CG-86 Grout; W. R. Meadows
    j. US Spec GP Grout; US Mix Co.
5. High Flow, Non-Metallic Grout: Use high-flow grout where high fluidity and/or increased placing time is required and for base plates that are larger than 10 square feet. The factory pre-mixed grout shall conform to ASTM C 1107, "Standard Specification for Packages Dry, Hydraulic-Cement Grout (NonShrink)." In addition, the grout manufacturer shall furnish test data from an independent laboratory indicating that the grout when placed at a fluid consistency shall achieve 95% bearing under a 18" x 36" base plate. Provide one of the following:
    a. Hi-Flow Grout; the Euclid Chemical Company
    b. MasterFlow 928; Master Builders Solutions US LLC.
    c. 588 Grout; W. R. Meadows
    d. US Spec MP Grout; US Mix Co.

Q. Reglets: Where resilient or elastomeric sheet flashing or bituminous membranes are terminated in reglets, provide reglets of not less than 26 gage galvanized sheet steel. Fill reglet or cover face opening to prevent intrusion of concrete or debris.

R. Carton Forms: Carton forms shall be manufactured using corrugated paper material with a moisture resistant exterior surface and specifically designed for foundation support. Carton forms shall be designed to support the wet weight of the concrete that is shown by the details to be placed on top of the form but not less than 600 psf. Refer to the Reinforced Concrete General Notes for the restriction on horizontal construction joints. The forms shall be designed in such a way that the bottom of the form will collapse when acted upon by upward movement of the soil.

1. Form Configuration: Carton forms shall be of a vertical cellular configuration only, except as permitted by item 4 below, and shall be rectangular as shown on the details. The depth of the carton forms is shown on the details. Forms shall be manufactured to fit snugly against round piers and shall be baffled in such a way as to prevent concrete from flowing back into the form during

the concrete placement. The Contractor shall use expandable foam to fill all gaps and holes between carton forms and at intersections with foundations.

2. Carton forms shall be kept dry and protected until concrete is placed. Wet, compressed, or deteriorated carton forms shall not be used. Do not wrap or cover carton forms with polyethylene sheets or permanent waterproof cover as that will prevent proper deterioration of the forms.

3. Technical data and brochures on carton forms shall be submitted for Engineer's review.

4. Other types of forms using different types of paper and different configurations will be accepted if it can be shown by independent tests that the form will properly function and will deteriorate due to moisture in an appropriate time frame.

5. For slab conditions, cover carton forms with a 1/4 inch masonite protection cover board to prevent puncture and other damage during construction.

6. Products: Subject to requirements, acceptable manufacturers include but are not limited to the following:

    a. SureVoid Products, Inc., Englewood, CO

S. Contraction and Construction Joint-Filler Material for Slabs-on-Ground: Provide a 2-component semi-rigid, 100% solids epoxy having a minimum shore A hardness of 80 when tested in accordance with ASTM D 2240 and an elongation below 25% when measured in accordance with ASTM D 638. Subject to compliance with requirements, provide one of the following:

1. Euco 700; the Euclid Chemical Company

2. Spec-Joint CJ; Conspec Marketing and Manufacturing Co., Inc.

3. MasterSeal 190 CR; Master Builders Solutions US LLC

4. MM-80; Metzger/McGuire Co.

5. Rezi-Weld Flex; W. R. Meadows

6. US Spec SR-50 EJF; US Mix Co.

T. Bond breaker for Construction Joints in Slabs-on-Ground: A dissipating bond breaking compound containing no silicones, resins, or waxes, and that conforms to ASTM C 309. Subject to compliance with requirements, acceptable manufacturers include the following:

1. Sure-Lift; Dayton Superior Corporation, Inc.

2. Tilt-Eez; Conspec Marketing and Manufacturing Co., Inc.

U. Joint-Filler Strips for Isolation Joints in Slabs-on-Ground: ASTM D 1751, asphalt-saturated cellulosic fiber, or ASTM D 1752, cork or self-expanding cork. In post-tensioned slabs or shrinkage-compensated slabs, use compressible isolation-joint filler material that does not develop a stress greater than 25 psi at 50% strain when tested in accordance with ASTM D 1621 or D 3575.

V. Rigid-Cellular-Polystyrene Boards use as Fill under Topping Slabs or Slabs-on-Ground:

1. Provide rigid, expanded (EPS) or extruded (XPS) cellular polystyrene boards that conform to ASTM D 6817 or ASTM C 578 with a minimum density of 1.0 lb/ft3. Subject to compliance with requirements, acceptable manufacturers include the following:

    a. STYROFOAM Brand; Dow Chemical Company

    b. R-Control EPS Geofoam - All grades; R-Control Building Systems

    c. EPS Geofoam; Carpenter Co.

    d. Knauf Geofoam; Knauf Polystyrene

    e. Insulfill; Premier Industries

W. Synthetic Micro Fiber Reinforcement: Collated, fibrillated, or monofilament polypropylene, cellulose, or multi-filament nylon fibers conforming to ASTM C 1116, Type III or Type IV.

1. Products: Acceptable non-shrink grouts are listed below:

    a. Fiberstrand; the Euclid Chemical Company

    b. Econo-Mono or Econo-Net; Forta Corp.

    c. Fibermesh 300; Propex Concrete Systems, Corp.

    d. Grace Microfibers or Grace Fibers; W.R. Grace & Co.

    e. Caprolan-RC; Honeywell Nylon Inc.

    f. Nycon RC; Nycon, Inc.

    g. UltraFiber 500; Buckeye Technologies, Inc.

h. MasterFiber M or F series; BASF Construction Chemicals

2.03 PROPORTIONING AND DESIGN OF CONCRETE MIXES

A. The Contractor shall submit concrete mix designs for each class of concrete indicated on the structural drawings and in the Specifications for approval by the Engineer at least 15 working days prior to the start of construction. If required, the Contractor shall engage the services of an independent Testing Laboratory to assist in preparing the mix design. The Contractor shall not begin work with a particular mix until that mix design has been approved.

B. Required types of concrete and compressive strengths shall be as indicated on the Structural Drawings.

C. Low Alkali Concrete: For concrete identified on the drawings as exposed to exposure classes C1 and C2, the total alkali contribution from cementitious materials in the concrete mix shall not exceed 4.0 pounds per cubic yd of concrete unless the aggregate used is certified to contain no deleterious materials that react with alkalis in the concrete mix as defined in ASTM C 33. This requirement may be met by the use of low-alkali cement.

D. Lightweight Structural Concrete:

1. Comply with the requirements of ACI 211 and ACI 301.

2. Provide concrete with a dry unit weight of not more than 116 pounds per cubic foot and not less than 110 pounds per cubic foot. Design mix to produce strengths as indicated on the drawings with a split cylinder strength factor (fct/(f'c)0.5) of not less than 5.7.

E. Aggregate: Comply with the following special requirements:

1. Material: Clean, hard, durable, angular, and sound consisting of gravel, crushed gravel, crushed stone, crushed concrete, slag, sand or combination.

2. Source: Use the following requirements to determine suitability of aggregate source and not for project control.

a. Deleterious Substances and Physical Properties:

1). Coarse Aggregate: Class designation 4S in table 3 in ASTM C 33.

2). Fine Aggregate: Table 1 in ASTM C 33. Organic impurities producing a dark color concrete may cause rejection.

3. Comply with the following special requirements:

a. For exposed concrete, provide aggregates from a single source.

b. For exposed surfaces subject to Exposure Class C1 or C2, do not use aggregates containing spalling-causing deleterious substances.

c. For slabs and other designated concrete, combined aggregate gradation shall be 8% - 18% for large top size aggregates (1 1/2 in.) or 8% - 22% for smaller top size aggregates (1 in. or 3/4 in.) retained on each sieve below the top size and above the No. 100. Deviations from this gradation may be allowed upon the approval of the Engineer subject to the following limitations:

1). The percent retained on two adjacent sieves shall be not less than 5%.

2). The percent retained on three adjacent sieves shall be not less than 8%.

3). If the percent retained on two adjacent sieves is less than 8%, the total percent retained on either of those sieves and the adjacent outside sieve shall be not less than 13 %

F. Admixtures:

1. Admixtures to be used in concrete shall be subject to the approval of the Engineer and and shall be used for the purpose intended by the manufacturer to produce concrete to meet the specified requirements.

2. Quantities of admixtures to be used shall be in strict accordance with the manufacturer's instructions.

3. Adjustments of Concrete Mixes: Mix design adjustments may be requested by the Contractor when characteristics of materials, job conditions, weather, test results, or other circumstances warrant. Such mix design adjustments shall be provided at no additional cost to the Owner. Any adjustments in approved mix designs including changes in admixtures shall be submitted in writing with the specified Concrete Mix Design Submittal Form to the Engineer for approval prior to field use.

4. Lightweight Structural Concrete:

a. Comply with the requirements of ACI 211 and ACI 301.

b. Provide concrete with a dry unit weight of not more than 116 pounds per cubic foot and not less than 110 pounds per cubic foot. Design mix to produce strengths as indicated on the drawings with a split cylinder strength factor (fct/(f'c)0.5) of not less than 5.7.

5. Shrinkage: Concrete so identified on the drawings shall be proportioned for maximum allowable unit shrinkage, measured at 28 days after curing in lime water as determined by ASTM C 157 (using air storage).

6. Chloride Ion Content:

a. Unless noted otherwise, The maximum water soluble chloride ion concentration in hardened concrete measured at ages from 28 to 42 days contributed from all ingredients including water, aggregates, cementitious materials, and admixtures shall not exceed the limits specified in ACI 318-14 Table 19.3.2.1 depending on to which Corrosion Exposure Class (CO, C1 or C2) the concrete is subject. Water-soluble chloride ion tests shall conform to ASTM C 1218. One test shall be run for each class of concrete before the mix design submittal and each time a change is made to the mix design (such as change in aggregate type or source).

b. The chloride ion content in all concrete used for prestressed or post-tensioned concrete shall not exceed .06 percent by mass of cementitious materials.

c. The Concrete Supplier shall certify on the Mix Design Submittal Form that the chloride ion content in all concrete mix designs used on the project does not exceed the limits stated above.

7. Pozzolan:

a. Natural or fly ash per ASTM C 618.

b. Silica fume per ASTM C 1240.

c. Slag cement per ASTM C989.

d. Metakaolin per ASTM C618.

8. Special Admixtures: Allowed if mix design submittal is accepted.

a. Lithium nitrate based solution for control of reactive aggregates.

b. Calcium nitrite based solution for corrosion protection of reinforced structures subject to chloride-induced corrosion.

c. Shrinkage reducer for controlling drying shrinkage in concrete.

d. Viscosity modifier for enhancement of self-consolidating concrete or for workability.

9. Mix Design

a. Selection of Cement: ASTM C 150 or C 1157.

1). For sulfate resistance, use Type V Portland cement, or Type II with Class F fly ash, silica fume or combination thereof. Class F fly ash may be used as an addition to Type V Portland cement.

2). Do not use fly ash with Type IP(MS) or Type III Portland cement.

b. Selection of Aggregates.

1). Maximum Particle Size:

a). 1/5 of narrowest dimension between forms.

b). 1/3 of depth of slab.

c). 3/4 of minimum clear spacing between reinforcing bars.

2). Gradation: ASTM C 33.

c. Selection of Pozzolan:

1). General: If a blended aggregate passes an unmodified ASTM C 1293 test, use of a pozzolan is CONTRACTOR's choice, otherwise select a pozzolan (or blended cement, or both) and determine the effective dosage to meet one of the following tests.

a). ASTM C 1567. The expansion of a cement-pozzolan-aggregate job-mix mortar bar is less than or equal to 0.10 percent at 16 days. Do not use this test if a lithium admixture is used in the job-mix.

b). ASTM C 441. The expansion of a test mixture at 56 days is less than or equal to a control mixture prepared with cement with equivalent alkalis between 0.5 and 0.6 percent.

2). Fly Ash (Class F): Allowed as a cement replacement under the following conditions.

a). Before replacement is made, use the minimum cement content in the design formula to establish the water/cement ratio.

b). Submit to ENGINEER a quality history of the fly ash identifying a minimum of 15 of the most current ASTM C 618 analysis.

3). Natural Pozzolan (Class N): Allowed as a cement replacement if the 14 day expansion test (ASTM C 1567) with job aggregates, job cement and natural pozzolan does not exceed the 14 day expansion test of job aggregates, job cement and Class F fly ash.

4). Silica Fume: Allowed as a cement replacement if replacement of hydraulic cement on a 1 part silica fume to 1 part cement does not exceed 10 percent, and water/cement ratio is established before cement is replaced with silica fume.

10. Selection of Fiber Reinforcement: The basis for determining material proportions of fiber-reinforced concrete is the Supplier's responsibility per ASTM C 1116 subject to mix property requirements of this Section. Unless specified otherwise provide synthetic fibers.

11. Selection of Mix Properties: Select and proportion mix to produce appropriate strength, durability and workability. Use ACI 211.1, 211.2, or 211.3.

12. Ready-Mix Concrete: Comply with requirements of ANSI/ASTM C 94, Ready Mixed Concrete.

G. SOURCE QUALITY CONTROL

1. Once selected, do not change source quality control sampling point.

2. Aggregate:

a. Soundness, ASTM C 88.

b. Alkali-silica Reactivity: ASTM, C 1567, and C 1293.

c. Petrographically examine fine and coarse aggregate sources once every 3 years per ASTM C 295.

3. Concrete Mix: Obtain samples per ASTM C 172 and run the following tests.

a. Compressive strength, ASTM C 39.

b. Density, ASTM C 138.

c. Slump, ASTM C 143

d. Air, ASTM C 231.

e. Temperature, ASTM C 1064.

4. Concrete Quality Charts: Comply with ACI 214 and ACI 301. Plot new results and identify trends on quality control charts that comply in form to ASTM STP 15-C. Show the Specified Strength (fc'), the required Average Strength (fcr), and the compressive strength versus date of Sample.

5. Equipment: Certify through the services of a professional engineer that trucks and plant equipment comply with the requirements of the National Ready Mixed Concrete Association. Do so at least every 2 years.

a. Transit Trucks: Equip transit trucks with plates indicating total volume, agitating volume and mix volume.

b. Weights and Measures: Comply with regulatory requirements of State of Oklahoma.

PART 3 - EXECUTION

3.01 INSTALLATION

A. Placement, Section 03 30 10.

B. Roadway pavement, Section 32 13 13.

C. Driveways, sidewalks, Section 32 13 14.

D. Curb, gutter, Section 32 16 13.

3.02 FIELD QUALITY CONTROL

A Truck Mixed Concrete (Dry Batch): ASTM C 94.

1. Truck Mixer: Fill drum no more than 63 percent of the gross drum volume and no less than 2 cubic yards. Use drum manufacturer's recommended mixing speed (between 12 - 18 rpm).

2. Truck Agitator: Do not fill drum greater than 80 percent of the gross drum volume. Use drum

manufacturer's recommended agitating speed (between 2 – 6 rpm).

B. Mixing Plant: ASTM C 94.

1. Use option C and requirements in this section for preparing ready-mixed concrete.
2. Use scales certified by the State of Oklahoma. Do not use volume measurement except for water and liquid admixtures.
3. Mixing time must exceed 80 seconds after adding air entrainment admixture.

C. Hand Mixing:

1. Do not hand mix batches larger than 0.5 cubic yard.
2. Hand mix only on a watertight platform.
3. Ensure all stones are thoroughly covered with mortar and mixture is of uniform color and consistency prior to adding water.

END OF SECTION

PART I - GENERAL

1.01 RELATED DOCUMENTS

A. Drawings and general provisions of contract, including General and Supplementary Conditions and Division 01 Specification Sections, apply to the work of this section.

1.02 SECTION INCLUDES

A. Concrete sampling and testing requirements.

1.03 REFERENCES

(Current Edition at Date of Bid)

A. ACI 318: Building Code Requirements for Structural Concrete.

B. ASTM C 31: Standard Practice for Making and Curing Concrete Test Specimens in the Field.

C. ASTM C 39: Standard Test Method for Compressive Strength of Cylindrical Concrete Specimens.

D. ASTM C 42: Standard Method of Obtaining and Testing Drilled Cores and Sawed Beams of Concrete.

E. ASTM C 78: Standard Test Method for Flexural Strength of Concrete (Using Simple Beam with Third-Point Loading).

F. ASTM C 136: Standard Method for Sieve Analysis of Fine and Coarse Aggregates.

G. ASTM C 138: Standard Test Method for Density (Unit Weight), Yield, and Air Content (Gravimetric) of Concrete.

H. ASTM C 143: Standard Test Method for Slump of Hydraulic-Cement Concrete.

I. ASTM C 172: Standard Method of Sampling Freshly Mixed Concrete.

J. ASTM C 173: Standard Test Method for Air Content of Freshly Mixed Concrete by Volumetric Method.

K. ASTM C 231: Standard Test Method for Air Content of Freshly Mixed Concrete by the Pressure Method.

L. ASTM C 567: Standard Test Method for Determining Density of Structural Lightweight Concrete.

M. ASTM C 1064: Standard Test Method for Temperature of Freshly Mixed Hydraulic-Cement Concrete.

N. ASTM C 1077: Standard Practice for Agencies Testing Concrete and Concrete Aggregates for Use in Construction and Criteria for Testing Agency Evaluation.

1.04 SUBMITTALS

A. Concrete Supplier: If requested, submit reports and material certificates verifying concrete quality control.

B. Laboratory: Promptly submit test data results for 7 and 28 day breaks to Supplier, CONTRACTOR and ENGINEER.

1.05 QUALITY ASSURANCE

A. Provide an ASTM C 1077 compliant and ACI certified laboratory.

B. Provide Level I ACI certified field sampling technicians.

1.06 SITE CONDITIONS

A. Assist ENGINEER: Furnish labor to assist ENGINEER in obtaining and handling acceptance samples at site or sources.

B. Store and Cure Test Specimens: Safely store and cure concrete test specimens and acceptance test specimens for first 24 hours.

1. Follow ASTM C 31 in making and curing cylinders or beams at site. Do not move the cylinders or beams for the initial 16 hour cure period. Provide initial cure temperature as follows.
   a. 60 to 80 deg. F. for Class 4,000 or less.
   b. 68 to 78 deg. F. for Class 5,000 or greater.
2. Equip storage device with an automatic 24 hour temperature recorder with an accuracy of plus or minus 2 deg. F.
3. Use water containing hydrated lime if water is to be in contact with cylinders or beams.
4. Ensure the device(s) can accommodate the required number of test cylinders or beams. Lack of capacity will cause the placement of concrete to cease.
5. Have the storage devices available at the point of placement at least 24 hours before placement.

6. A 24 hour test run may be required.

1.07 ACCEPTANCE

A. At the Site:

1. Sampling: ASTM C 172. Reject non-complying batches until 2 consecutive batches are compliant then proceed in random batch testing for acceptance.

Table 1 - Concrete Mix

Rate of Placement (Cubic Yard / Day)	Temperature	Air	Slump	Density	Strength
0 - 8	1	1	1	1	Determined by ENGINEER
0 - 50	1	1	1	1	1
Each additional 50 cu. yd. or fraction	1	1	1	1	1

NOTES:

Sampled at discharge chute prior to placement, or at pumper hose after priming grout has been wasted.

2. Temperature, ASTM C 1064.
3. Air content, ASTM C 231 or ASTM C 173 if lightweight aggregate is used.
4. Slump, ASTM C 143.
5. Density, ASTM C 138.

B. At the Laboratory:

1. Compressive strength, ASTM C 39.
2. Flexural strength, ASTM C 78.

PART 2 - PRODUCTS

NOT USED

PART 3 - EXECUTION

3.01 PRECAST PRODUCTS

A. Obtain composite Samples from different portions of the batch.

B. Make and cure concrete test specimens for acceptance, ASTM C 31.

C. Cure all precast products with water vapor or water.

D. Do not damage precast products by stripping forms or handling before the concrete reaches its specified strength.

3.02 CAST-IN-PLACE PRODUCTS

A. Concrete testing shall be arranged by Contractor and paid for by the Owner. Any retesting due to test failure shall be paid for by the Contractor. Test results to be provided to the Architect/Engineer, and Contractor.

B. Evaluation of test results:

1. Concrete strength is considered satisfactory if every arithmetic averages of any three consecutive strength tests results equal or exceed the specified strength (f'c) and no individual strength test result falls below specified strength (f'c) by more than 500 psi if fc' is 5000 psi or less; or by more than 0.10(f'c) if (f'c) exceeds 5000 psi.
2. Other items tested are considered satisfactory if the test result falls within the specified parameters (i.e. if air entrainment is within 1-1/4% of 6-1/4%).

C. Concrete Testing Requirements: (Require the testing agency to do the following)

1. Respond to the CONTRACTOR's requests for testing in a timely manner. Report all test and inspection results to the project manager and the CONTRACTOR immediately, especially when there appears to be a problem.
2. Review and/or test materials for compliance with specifications.

3. Secure production samples of materials at plants or stock-piles during course of work and test for compliance with specifications.
4. Perform strength testing of concrete with one strength test for each 50 CY, or fraction thereof, of each mix design of concrete placed in any one day. Each test shall include four cylinders (one to be broken at 7 days and three at 28 days).
5. Determine compliance with water/cement ratio requirements through use of the slump test on each batch of concrete delivered. Specify required slump and acceptable variance for each design mix.
6. Determine compliance with air content requirements by testing each batch of concrete delivered.
7. Determine concrete temperature compliance by taking temperature reading on each batch of concrete delivered.
8. Identify the location of placement of tested concrete in testing report.

D. Duties:
1. Provide necessary testing services for qualification of proposed materials and mix designs.
2. Materials and mix design submittals.
3. Facilitate testing by advising testing agency in advance of operations requiring testing. Furnish labor to assist the testing agency in obtaining and handling samples at job site or sources of materials. Provide and maintain adequate facilities for safe storage and proper curing of concrete test specimens on site for first 24 hours.
4. Responsible for testing costs and remedial work required as a result of failed tests.

E. Acceptance: If any test is below the specified strength shown, the concrete may be accepted at a reduced price. The price reduction shall apply to the amount of concrete represented by the strength test as follows:

PSI Below Specified Strength Specifications	Pay Factor
1-100	0.98
101-200	0.94
201-300	0.88
301-400	0.80

*Concrete with compressive strength of more than 400 psi below the required strength shall be evaluated by the project manager. The project manager may accept this concrete at a pay factor of 0.50, or require that it be replaced with acceptable material.

F. Obtaining Samples:
1. Batch samples, ASTM C 172.
2. Core samples, ASTM C 42.

G. Identify location of tests on test reports.

H. Compressive strength, ASTM C 39.
1. Mold four 4”x8” test specimens, ASTM C 31.
2. For each strength test perform slump, air, density, and temperature test.
3. Break 1 cylinder at 7 days and 3 cylinders at 28 days. The average strength of 3 cylinder breaks shall be considered the test result.
4. If any one cylinder in a 28 day test shows definite evidence of improper sampling, molding, handling, curing, or testing, discard the cylinder. The average strength of the remaining cylinders shall be considered the test result.
5. Strength: Four cylinders every 50 cubic yards.

I. Aggregate, ASTM C 136 for fine and coarse aggregate.

J. Slump test, ASTM C 143.
1. Slump: Test on each truck load.

K. Air Test:
1. Normal weight concrete, ASTM C 231.
2. Light weight concrete, ASTM C 173.
3. Air entrainment: Test on every truck load.

L. Density:
1. Hardened concrete in the lab, ASTM C567. Fresh concrete in the field, ASTM C138.

M. When requested, test in-place concrete by rebound hammer, ultrasonic, or other non-destructive device:

1. To determine relative strengths in various locations in Work.
2. To aid in evaluating concrete strength.
3. To select areas to be cored.
4. To verify quality control in the absence of control testing.

3.03 RETESTING DEFECTIVE CONCRETE

A. Testing shall be coordinated and paid for by the Construction Manager. Additional testing due to test failure shall be specified to be at the expense of the SUBCONTRACTORS.

B. If CONTRACTOR desires to do a re-test; a request to ENGINEER for retesting must be made within 35 days from time of concrete placement. No coring or retesting shall be done after 40 days have elapsed from the time of placement.

1. Choose 3 random test locations and verify choice with ENGINEER. Obtain retest samples per ASTM C 42 and test compressive strength per ASTM C 39 or flexurale strength per ASTM C 78.
2. Establish a chain of custody for all test samples.
3. If concrete placed in the Work will be dry under service condition, air dry cores for 7 days before tests. Unless otherwise specified, use air temperature 60 to 80 deg. F. and relative humidity less than 60 percent.
4. If concrete placed in the Work will be more than superficially wet under service conditions, test cores after moisture conditioning (liquid or vapor water cure).
5. If more than 1 core shows evidence of having been damaged before testing provide replacement cores, otherwise evaluation will be done on 2 or more core samples.
6. Evaluate cores in accordance with ACI 318 requirements.
7. If core tests are inconclusive, or impractical to obtain, or if structural analysis does not confirm the safety of the Work, load test may be used and evaluated in accordance with ACI 318 requirements.

C. Coat sides of core hole with concrete epoxy resin adhesive. Fill core holes with non-shrink concrete mortar. Match color and texture of surrounding concrete.

D. Within 40 days from time of placement publish the chain of custody record and the results of retesting.

END OF SECTION

PART 1 - GENERAL

1.01 RELATED DOCUMENTS

A. Drawings and general provisions of Contract, including General and Supplementary Conditions and Division-01 Specification sections, apply to work of this section.

1.02 SECTION INCLUDES

A. Concrete placement for slabs on grade, slabs on fill, structural building frame, and other concrete components.

1.03 REFERENCES

(Current Edition at Date of Bid)

A. ACI 301: Specifications for Structural Concrete.

B. ACI 305.1: Specification for Hot Weather Concreting.

C. ACI 306.1: Standard Specification for Cold Weather Concreting.

D. ACI 309R: Guide for Consolidation of Concrete.

E. ASTM C 881: Standard Specification for Epoxy-Resin-Base Bonding Systems for Concrete.

F. ASTM C 1059: Standard Specification for Latex Agents for Bonding Fresh to Hardened Concrete.

1.04 SUBMITTALS

A. Batch Delivery Ticket: For each batch delivered to site, identify.

1. Date and Project description.
2. Producer and plant.
3. Name of contractor.
4. Serial number of ticket.
5. Mix identification.
6. Truck number and time dispatched.
7. Volume of concrete.
8. Type and amount of cement.
9. Total water and water/cement ratio.
10. Water added for receiver of concrete and receiver's initials.
11. Admixture types.
12. Separate weights of fine and coarse aggregate.
13. Statement of whether batch is pre-mixed at plant or mixed in transit.

B. Record of Placed Concrete: Identify record date, location of pour, quantity, air temperature, and CONTRACTOR’s quality control test samples taken.

C. Bonding Compound: Identify product name, type, and chemical analysis.

1.05 QUALITY ASSURANCE

A. Provide ACI certified finishers.

B. Remove and replace any placed concrete suffering hot or cold weather damage.

C. For control testing follow Section 03 30 05 requirements.

1.06 ACCEPTANCE

A. General:

1. Price adjustment, Section 01 20 00. CONTRACTOR may request ENGINEER determine appropriate Modifications or payment adjustments to correct Defective Work.
2. Dispute resolution, Section 03 30 05.

B. Concrete work that fails to meet any of the following requirements will be considered defective. Replace any Defective Work at no additional cost to the OWNER.

1. Placement:

a. Reinforcing steel size, quantity, strength, position, damage, or arrangement is not as

specified or does not comply with code.

b. Formwork differs from required dimensions or location in such a manner as to reduce concrete's strength or load carrying capacity or physical esthetics.

c. Workmanship likely to result in deficient strength.

2. Finishing:

a. Concrete exposed to view has defects that adversely affect appearance.

b. Slab tolerances of Section 03 35 00 are not met.

3. Protection:

a. Method of curing is not as specified.

b. Inadequate protection of concrete during early stages of hardening and strength development from.

1). temperature extremes.

2). rapid moisture loss.

c. Mechanical injury, construction fires, accidents, or premature removal of formwork likely to result in deficient strength development.

PART 2 - PRODUCTS

2.01 MATERIALS

A. Concrete, Section 03 30 ~~04~~00. Class as indicated.

1. For roadway cuts, Section 32 13 13.

B. Vapor retarder, Section 07 26 16.

C. Forms, Section 03 11 00.

D. Reinforcement, Section 03 20 00.

E. Coverings and curing compound, Section 03 39 00.

PART 3 - EXECUTION

3.01 PREPARATION

A. Notify ENGINEER minimum 24 hours prior to commencement of concrete placement operations.

B. Do not allow construction loads to exceed structural capacity.

C. Clean previously placed concrete. Apply bonding compound per manufacturer's instructions.

D. At locations where new concrete is dowelled to existing work, drill, remove dust, insert and pack steel dowels with shrink compensating grout.

3.02 EXAMINATION

A. Verify items to be cast into concrete are accurately placed and held securely.

B. Verify slump, air content range, mix identity, and batch time on delivery ticket matches mix design.

C. Verify slab steel mats are supported by steel chairs, precast concrete blocks, or other slab bolsters. Do not pour if absent.

3.03 DELIVERY

A. Slump and Air Content: Keep slump and air content within the allowable range.

B. Placement Time:

Air Temperature	Time after Initial Batching
Less than 90 deg. F.	1–1/2 hours
Greater than 90 deg. F.	1–hour (without retarder)
Greater than 90 deg. F.	1–1/2 hours (with retarder)

*To increase time past 1-1/2 hours, a hydration stabilizer that is acceptable to Supplier may be used.

C. Tempering:

1. Use of a workability-retaining admixture MasterSure Z 60 from Master Builders Solutions to retain slump and workability, and eliminate or minimize the need for late addition of water.

2. Water may be added if all following conditions are met.

a. The mix design water/cement ratio is not exceeded.

b. The delivery ticket allows for addition of water based upon water/cement ratio.

c. The amount of water added is accurately measured to within 1 gallon of the design addition.

d. Water addition is followed by 3 minutes of mixing at mixing speed prior to discharge.

e. Supplier and CONTRACTOR mutually agree on who is authorized to add water.

2. Do not add water after 1 cubic yard of concrete has discharged from the delivery vehicle.

D. Super-plasticizer: Comply with manufacturer's requirements. If none, then as follows:

1. If added at site, add agent using injection equipment capable of rapidly and uniformly distributing the admixture to the concrete. Prior to discharge, mix for a minimum of 5 minutes at a drum rate not less than 12 rpm or more than 15 rpm.

2. If added at plant; do not deliver to site unless batch delivery ticket displays water/cement ratio prior to super-plasticizer addition.

3.4 CONCRETE PLACEMENT

A. Materials - Specific requirements:

1. Portland Cement: Use Type ~~I~~/II cement conforming to ASTM C 150 Low alkali for all on grade or below grade installations. Type I m~~, or I/II m~~ay be used in above grade concrete work.

2. Admixtures: Calcium Chloride shall not be used as an admixture.

3. Air Content: Specify 6-1/4% plus or minus 1-1/4%.

4. Pozzolans: Replacement allowed up to 15% of cement with a 1.5 to 1 replacement ratio. Specify loss of ignition at less than 1% and water requirement not to exceed 100%.

5. Synthetic fibrous reinforcement: Specify collated, fibrillated polypropylene with a mix ratio of 1.5 pounds of fiber to 1.0 cubic yards of concrete. To be used in all concrete specified in Section 02528.

6. Curing and Sealing: Specify a combination curing and sealing compound to be used on all exposed concrete flatwork complying with the requirements of ASTM C 309 and AASHTO M 148. The compound shall be acrylic based with a minimum of 18 percent solids and a moisture loss of 0.031 grams per cubic centimeter maximum after 72 hours. Specify a two coat application occurring immediately after surface water dissipation and concrete finishing and at approx. 28 day from placement.

B. Concrete Strength: Specify a minimum allowable compressive strength (at 28 days from placement) and minimum cement content (bags per cubic yard at 94 lbs. per bag) as follows unless otherwise noted:

1. Footings: 3,000 psi and 5.5 bags.

2. All other conditions: 4,000 psi and 6.0 bags.

C. Concrete proportioning and mixing:

1. Specify use of only one type and brand of cement from same mill, and one source of coarse and fine aggregate.

2. Require accurate measurement of all water added to the mix with means for verification.

3. The maximum allowable time between charging of materials in the mixing drum and placement on site is 90 minutes.

4. Ready Mix Concrete: Require a computerized ticket with each batch to be delivered to the project manager that includes the following information:

a. Name of ready-mix batch plant.

b. Serial number of ticket.

c. Date and number of truck.

d. Name of CONTRACTOR.

e. Specific designation of job (name and location).

f. Volume of concrete (number of cubic yards).

g. Time batch was dispensed to truck.

h. Reading of revolution counter at first addition of water.

i. Signature or initials of ready-mix representative.

j. Type and brand of cement.

k. Amount of cement (can be indicated by weight or quantity).

l. Total water content by producer (can be indicated by weight or quantity).

m. Water added by receiver of concrete and his initials (can be indicated by weight or quantity).

n. Admixtures and amount of same.

o. Maximum size of aggregate.

p. Weights of fine and coarse aggregates.

q. Indication that all ingredients are as previously certified or approved.

D. Concrete Replacement Procedures:

1. Cold Weather

a. All procedures of ACI 306.1 shall be followed for all concrete construction. A concrete temperature of 50º to 60º F is desirable.

b. Heating of the concrete aggregate must be approved by Architect.

c. If freezing may occur during curing period, the concrete shall be protected by means of an insulating covering and/or heating to prevent freezing for a period of not less than 10 days after placing.

d. Submittals shall clearly show procedures for protecting concrete and subsurface. Equipment requirements shall be clearly specified. No combustion heating shall be allowed during the first 24 hours unless precautions are taken to prevent exposure to exhaust gases.

2. Hot Weather

a. All procedures of ACI 305.1 shall be followed for all concrete construction.

b. A concrete temperature of 50º to 60ºF. is desirable. Special measures must be taken to maintain aggregate and water temperature below 90 degrees Fahrenheit.

c. Special procedures for wetting forms, reinforcing steel, and supporting earth immediately prior to placing concrete should be given.

d. If the combination of air temperature, relative humidity and wind velocity causes a rate of evaporation approaching 0.2 lb./square foot per hour, precautions against plastic shrinkage are necessary.

e. Sprinkling is acceptable to keep concrete form temperatures down before concrete is placed.

f. Measures should be taken to maintain both concrete strength and air entrainment at higher temperatures. If additional water is required to maintain consistency, additional cement and air entrainment admixture should be required as needed.

3. Curing of concrete: Curing can be accomplished by water ponding, covering with saturated burlap or cotton mats, continuous sprinkling or by using an approved curing and sealing compound.

4. Concrete protection: Protect the concrete from freezing, oil, grease, staining or defacement of any kind until it has set. If such protection is not provided, Removing and replacing the slab is at CONTRACTOR's expense.

E. Concrete Quality: Specify parameters for acceptance of concrete work and describe measures to be taken when concrete does not meet all parameters such as repair or removal and replacement. Such parameters should include appearance and strength requirements.

3.5 CAST-IN-PLACE CONCRETE

A. Job Conditions:

1. Do not place concrete on frozen ground.

2. Do not place concrete during rain, sleet or snow unless adequate protection has been provided and authorization has been received from Architect.

3. Do not allow rain water to increase mixing water or to damage the concrete finish.

B. Project manager inspections: Must receive project manager's approval of all dimensions, steel location, condition of forms, and placing equipment at least four (4) working hours prior to placing any concrete.

C. Adding water to concrete:

1. Do not add water to concrete without the approval of the project manager.

2. Account for all water added to the concrete mix.

3. Do not add any water to ready-mix concrete drum unless the following conditions are satisfied:

a. Water is added only while the concrete is mixing in the drum.

b. The mixing truck is equipped with a revolution counter and a working water meter.

c. The delivery ticket provides all information required so that the total amount of water added to the mix can be determined.

D. Joints and embedded items:

1. Construction Joints: Locate and install construction joints as indicated on the drawings or if not shown on drawings, located so as not to impair strength and appearance of the structure, as acceptable to Architect/Engineer.

a. Keyways: Provide continuous keyways with a depth of one tenth of the member thickness (1 1/2" minimum or as shown on the drawings) in construction joints only where shown on the drawings.

b. Joint Construction: Place construction joints in the center one third of suspended spans and grade beams and as shown on the drawings for slabs-on-grade and walls unless shown otherwise. Offset joints in girders a minimum distance of twice the beam width from a beam-girder intersection. Place joints perpendicular to main reinforcement. Continue reinforcement across construction joints unless otherwise shown on the drawings. Dowels that cross construction joints shall be supported during concreting operations so as to remain parallel with the slab or wall surface and at right angles to the joint. Submit all construction joint locations as a shop drawing submittal.

c. Waterstops: Provide waterstops in construction joints as indicated on the Architectural and Structural Drawings. Install waterstops to form continuous diaphragm in each joint. Make provisions to support and protect exposed waterstops during progress of work. Fabricate field joints in waterstops in accordance with manufacturer's printed instructions.

d. Isolation Joints in Slabs-on-Ground: Construct isolation joints (without dowels) in slabs-on-ground at points of contact between slabs on ground and vertical surfaces only where specifically detailed on the drawings. Install joint-filler strips at joints where indicated. Extend joint-filler strips full width and depth of joint, terminating flush with finished concrete surface, unless otherwise indicated on the drawings. Install joint-filler strips in lengths as long as practicable. Where more than one length is required, lace or clip sections together. Provide construction joints with dowels at all locations unless isolation joints are detailed.

e. Contraction joints in slabs-on-grade and unbonded topping slabs: Maximum joint spacing shall be 36 times the slab thickness or 20 feet, whichever is less and at a minimum on column lines unless otherwise noted on the drawings. Use one of the two following methods (sawed or formed) to create the joints. Do not use the formed joint in areas subject to vehicular traffic or in industrial slabs.

1). Sawed Joints

a). Primary Method: Early-Entry, dry-cut method, by Soff-Cut International, Corona, CA (800) 776-3328. Finisher must have documented successful experience in the use of this method prior to this project. Install cuts within 1 to 4 hours, depending on air temperature, after final finish as soon as the concrete surface is firm enough to not be torn or damaged by the blade at each saw cut location. Use 1/8 inch thick blade, cutting 1 1/4” inch into the slab.

b). Optional Method (where Soff-Cut System method equipment is not available, subject to limitations): This method may not be used when there is no dowel passing through the contraction joint. Use a conventional saw to cut joints within 4 to 12 hours after finishing as soon as the concrete has hardened sufficiently to prevent aggregates from being dislodged by the saw. Complete cutting before shrinkage stresses become sufficient to produce cracking. Use 1/8 inch thick blade, cutting to a depth of 1/4 of the slab thickness but not less than 1 inch. Cut to a depth of 1/3 slab thickness for slabs reinforced with steel fibers.

2). Formed Joints: Form contraction joints by inserting premolded plastic hardboard or fiberboard strip into fresh concrete until top surface of strip is flush with slab surface. The depth is to be 1/4 the slab thickness, but not less than 1 inch. Tool slab edges round on each side of insert. After concrete has cured, remove inserts and clean groove of loose debris.

3). Joint Filler: Provide in both contraction and saw-cut construction joints when specified.

a). Remove dirt and debris from the joint by vacuuming immediately prior to filling the joint. Clean the joint of curing compounds and sealers.

b). Filler material shall be applied to the joints when the building is under permanent temperature control, but no less than 90 days after slab construction.

c). Follow the manufacturer's recommended procedure for installing filler material. The joint filler must be flush with the adjacent concrete. A concave profile on the top of the joint filler is unacceptable and will be grounds for removal and replacement.

4). The Contractor shall protect the joints from damage caused by wheeled traffic or other sources during construction until a joint-filler material (if specified) has been installed.

2. Expansion Joints:

a. Reinforcement or other embedded metal items bonded to the concrete shall not extend through expansion joints (except dowels in floors bonded on only one side of joints).

3. Installation of Embedded items

a. General: Set and build into work anchorage devices and other embedded items required for other work that is attached to, or supported by, cast-in-place concrete. Use setting drawings, diagrams, instructions, and directions provided by suppliers of items to be attached thereto. Properly locate embedded items in cooperation with other trades and secure in position before concrete is poured.

b. Install inserts, dowels, reglets, hangers, metal ties, anchors, bolts, nailing strips, blocking, ground, and other fastening devices as required for attachment of other work.

c. Provide non-rusting sleeves for electrical conduits, pipes, and fittings that penetrate slabs, walls, or beams.

d. Edge Forms and Screed Strips for Slabs: Set edge forms or bulkheads and intermediate screed strips for slabs to obtain the required elevations and contours in the finished slab surface. Provide and secure units sufficiently strong to support the types of screed strips by the use of strike-off templates or accepted compacting type screeds.

e. Manholes, handholes, vaults and underground structures: Set and secure duct connectors in walls at required elevations and spacings.

f. Embedded Conduits and Fittings

1). Conduits and fittings in concrete shall be subject to acceptance by the Engineer and shall be located such that they do not impair the strength of the concrete member. Conduits include pipes, ducts and electrical conduits. Conduits and fittings shall conform to the following, unless otherwise shown on the structural drawings:

a). Concrete walls:

(1). Conduits larger than 1-inch outside diameter shall not be embedded vertically in any wall. Conduits shall be spaced a minimum of 10 times the outside diameter of the conduit and shall be placed in the middle of the wall thickness.

(2) Conduits shall not be embedded horizontally in any wall, lengthwise.

(3) Conduits passing through wall shall not impair the strength of the wall and shall be provided with Schedule 40 galvanized steel pipe (ASTM A53) sleeve.

b). Concrete columns: Conduits shall not penetrate or be embedded in columns unless specifically approved by the Engineer.

c). Concrete beams:

(1). Vertical conduits larger than 1 inch outside diameter shall not be embedded vertically in any concrete beam. Conduits shall be spaced a minimum of 10 times the outside diameter and shall be placed in the middle third of the beam thickness.

(2). Conduits shall not be embedded horizontally in any beam,

lengthwise.

(3). Conduits passing through beams shall not impair the strength of the beam and shall be provided with Schedule 40 galvanized steel pipe (ASTM 53) sleeve.

d). Suspended Concrete Slabs and Toppings:

(1) Conduits shall not be embedded in any slabs and toppings on metal decking and in toppings less than 3" thick.

(2) For other conditions, conduits larger than 1-inch outside diameter shall not be embedded in any concrete slab or topping. Conduits shall be spaced a minimum of 10 times the outside diameter and shall be placed in the middle third of the slab thickness. Conduit crossings shall be avoided.

(3) Conduits passing through slabs shall be provided with Schedule 40 galvanized steel pipe (ASTM A53) sleeve.

e). Concrete slabs on grade: Conduits shall not be embedded within the thickness of any concrete slabs on grade. Conduits may be placed below the bottom surface of slabs on grade and shall be spaced a minimum of 10 times the outside conduit diameter.

2). Where a number of conduits are intended to penetrate a structural member at a location which may unduly impair the strength of a member, such as near the surface of a beam or slab, the Engineer shall be informed and his approval must be obtained before the concrete is placed.

3). Contractor shall coordinate the installation of all embedded items and penetrations. Cost of any added reinforcement required at pipe and conduit penetration and embedment shall be borne by the Contractor.

E. Placing and finishing formed concrete:

1. Preparation before placing:

a. Sprinkle semi-porous subgrades sufficiently to eliminate suction of moisture from mix. Porous subgrades shall be sealed prior to concreting.

b. Project manager review and approve formwork, reinforcement, etc. prior to commencement of concreting.

2. Conveying:

a. Conveying equipment conform to ASTM C 94.

b. Handle the concrete from the mixer to the place of final deposit as rapidly as practicable.

3. Placing Concrete:

a. Place concrete continuously, or in layers (24 inches thick or less) such that no concrete will be deposited on concrete which has hardened sufficiently to cause the formation of seams or planes of weakness within the section.

b. If a section cannot be placed continuously, construction joints shall be located as approved (30 foot on center max.).

4. Segregation:

a. Concrete shall not be allowed to free fall over six (6) feet.

b. Concrete be deposited as near as possible to its final position to avoid segregation due to rehandling or flowing.

5. Consolidation:

a. All concrete shall be consolidated by vibration. Internal vibrators shall have a minimum frequency of 8000 vibrations per minute and sufficient amplitude to consolidate the concrete effectively.

b. Use of vibrators to transport concrete within forms shall not be allowed.

c. Vibrators shall be inserted and withdrawn at points approx. 18 inches apart. The duration at each insertion point shall be sufficient to consolidate concrete without segregation (generally 5 to 15 seconds).

d. A spare working vibrator shall be kept close at hand during all concrete placing operations.

e. Do not vibrate forms of steel.

6. Bonding:

a. Apply a bonding adhesive when necessary to enhance the bond between hardened concrete and new concrete if specified by ENGINEER.

b. Clean and dampen hardened concrete surfaces to receive fresh concrete.

7. Perform the following operations:

a. Repair of defective surface areas: Surface defects shall be repaired immediately after form removal.

b. All honey-combed and other defective concrete shall be removed down to sound concrete. The edges of the repair area shall be perpendicular to the surface area and slightly undercut. No featheredge will be permitted.

F. Placing and finishing slabs:

1. Preparation of subgrade for slabs on grade: Keep subgrade moist but do not allow standing water, mud or soft spots. If temperature where concrete is to be placed is below 50° F, enclose and heat to maintain temperature above 50° F long enough to remove frost from subgrade.

2. Concrete mixing and placing with finishing: Spread and finish concrete before bleeding water has an opportunity to collect on the surface.

3. Locate joints in slabs as indicated: Schedule saw cutting with the set of the concrete to eliminate raveling during sawing and before shrinkage cracks develop.

G. Curing and Protection: Begin curing operations immediately after placement. Protect concrete from premature drying, excessively hot or cold temperatures, mechanical injury or vandalism.

H. Guarantee: CONTRACTOR shall furnish the Owner with a written two (2) year guarantee for concrete materials and workmanship, including material and labor for total removal and replacement. The CONTRACTOR shall immediately place in satisfactory condition in every particular, any such guaranteed work upon written notice from the project manager and make good all damage to the buildings and grounds caused by said work, without cost to the Owner. All guarantees shall start from the date of written substantial completion.

3.6 CONCRETE CLEANUP

A. Pay particular attention to project cleanup.

B. Daily cleanup, weekly cleanup and job completion cleanup responsibilities to remove garbage, rubbish and unused materials are required.

C. Coordinate school maintenance department for final project cleanup.

D. Particular attention shall be placed on cleanup of areas subject to daily School activity. Construction activity shall be coordinated with school maintenance department to reduce congestion or interruption of school activity.

3.7 CONCRETE RESURFACING

A. Resurfacing Requirements:

1. Density of 96% of adjacent soil.

2. Saw-cut all existing surfaces at excavations to an absolute minimum width necessary for construction activity.

3. Types of roadway surfaces shall be shown for gravel, bituminous and concrete surfaces. Gravel surfaces shall match existing gravel thickness. New asphalt thickness shall match existing thickness plus 1 inch, but must be a minimum of 3 inches and maximum of 6 inches. Concrete surfaces shall match existing thickness.

3.8 CONCRETE REHABILITATION

A. Requirements for repair of existing concrete, patching or repair of damaged concrete by use of epoxy resin or concrete ingredient compounds. Information shall include cleaning of concrete surfaces; application of bonding agent and cement paste filler; and application of epoxy adhesive and fillers.

B. Materials:

1. Epoxy Resins: Bond Strength - 2700 psi - ASTM C882. Tensile Strength - 6600 psi - ASTM C638. Elongation - 2% at 7-day at 70 degrees F. - ASTM C638. Compressive Strength - 6500 psi - ASTM D695.

2. Bonding Agent: Polyvinyl Acetate.

3. Portland Cement: ASTM 150, Gray color.

4. Sand: Clean, uniformly graded, ASTM C33 or ASTM C404.

5. Cleaning agent: Commercial muriatic acid.

3.9 JOINTS AND JOINT SEALING

A. Steel edging and jointing tools are acceptable. Preferred are magnesium, aluminum or wood tools

B. Pavement joint sealing, Section 07 92 00.

3.10 CONSOLIDATION

A. Keep spare vibrator available during concrete placement operations, ACI 309R.

3.11 FINISHING

A. Section 03 35 00 and as follows:

Table 1 – Finishes

Type of work	Type of finish
Sidewalks, garage floors, ramps, exterior concrete	Broom or Smooth finish
Exterior platforms, steps, and landings, exterior and interior pedestrian ramps, not covered by other finish materials	Non-slip finish
Surfaces intended to receive bonded applied cementitious applications	Scratched finish
Surfaces intended to receive roofing, except future floors, waterproofing membranes, and roof surfaces that are	Floated finish
Floors and roof surfaces that are floors intended as walking surfaces to receive	Troweled
Unpainted concrete surfaces not exposed to public view	Rough as-cast form finish
Unpainted concrete surfaces exposed to public view	Smooth as-cast form finish
Concrete surfaces to receive paint	Grout cleaned finish

3.12 CURING

A. Section 03 39 00. Use a membrane forming compound unless specified otherwise.

3.13 MISCELLANEOUS CONCRETE ITEMS

A. Filling-In: Fill-in holes and openings left in concrete structures for passage of work by other trades, unless otherwise shown or directed, after work of other trades is in place. Mix, place and cure concrete as herein specified, to blend with in-place construction. Provide other miscellaneous concrete filling shown or required to complete work.

B. Curbs: Provide monolithic finish to interior curbs by stripping forms while concrete is still green and steel-troweling surfaces to a hard, dense finish with corners, intersections and terminations slightly rounded.

C. Equipment Bases and Foundations: Provide machine and equipment bases and foundations, as shown on drawings. Set anchor rods for machines and equipment to template at correct elevations, complying with certified diagrams or templates of manufacturer furnishing machines and equipment.

D. Grout base plates and foundations as indicated, using specified non-shrink, non-metallic grout. Use high-flow grout where high fluidity and/or increased placing time are required. This grout shall be used for all base plates larger than 10 square feet.

E. Steel Pan Stairs: Provide concrete fill for steel pan stair treads and landings and associated items. Cast-in safety inserts and accessories as shown on drawings. Screed, tamp and finish concrete surfaces as scheduled.

F. Installation of adhesive anchors using injectable epoxy or adhesive: A representative of the adhesive manufacturer shall be present for the first day that adhesive anchors are installed. After drilling the hole to the diameter and depth recommended by the manufacturer, clean the hole with a wire or nylon brush. Blow the dust out of the hole using compressed air with a nozzle that reaches to the bottom of the hole. When using adhesive from a new pack, the adhesive that is discharged from the mixing nozzle should be a uniform gray color before any adhesive is installed in the hole. Fill the hole with adhesive starting from the very bottom of the hole until the hole is about 2/3 full. Do not leave an air pocket at the bottom of the hole. Insert the anchor rod or dowel by slowly twisting it into the hole.

3.14 PROTECTION AND REPAIR

A. Protection:

1. Immediately after placement, protect concrete from premature drying, excessively hot or cold temperatures, graffiti, and mechanical injury.

2. Maintain concrete with minimal moisture loss at relatively constant temperature for period necessary for hydration of cement and hardening of concrete.

B. Repair:

1. Modify or replace concrete not conforming to required levels, lines, details, and elevations.

   a. Formed Surfaces: Concrete surfaces requiring repairs shall include all cracks in excess of 0.01" and any other defects that affect the durability or structural integrity of the concrete. Voids, including honeycombing and rock pockets, and tie holes shall be repaired as required by the specified Surface Finish.

   b. Unformed Surfaces: Concrete surfaces requiring repair shall include all surface defects such as crazing, cracks in excess of 0.01" wide or cracks which penetrate to reinforcement or through the member, popouts, spalling and honeycombs.

2. Classification:

   a. Structural Concrete Repair: Major defective areas in concrete members that are load carrying (such as shear walls, beams, joists and slabs), are highly stressed, and are vital to the structural integrity of the structure shall require structural repairs. Structural concrete repairs shall be made using a two-part epoxy bonder, epoxy mortar or specified polymer repair mortar. The Engineer shall determine the locations of required structural concrete repairs.

   b. Cosmetic Concrete Repair: Defective areas in concrete members that are nonload carrying and minor defective areas in load carrying concrete members shall require cosmetic concrete repair when exposed to view and not covered up by architectural finishes. Cosmetic concrete repairs may be made using a polymer repair mortar and compatible bonding agent. The Architect/Engineer shall determine the locations of required cosmetic concrete repairs. Stains and other discolorations that cannot be removed by cleaning and are exposed to view will require cosmetic repair. Cosmetic concrete repair in exposed-to-view surfaces will require Architect's approval prior to patching operation.

   c. Slab Repairs: High and low areas in concrete slabs shall be repaired by removing and replacing defective slab areas unless an alternate method, such as grinding and/or filling with self-leveling underlayment compound or repair mortar is approved by the Architect/Engineer. Repair of slab spalls and other surface defects shall be made using epoxy products as specified above and as determined by the Engineer. The high strength flowing repair mortar may be used for areas greater than 1 inch in depth.

3. Structural analysis and additional testing may be required at no additional cost to OWNER when the strength of a structure is considered potentially deficient.

4. To patch imperfections refer to Section 03 35 00 requirements.

5. Remove graffiti and mechanical injury.

END OF SECTION

PART 1 - GENERAL

1.01 RELATED DOCUMENTS

A. Drawings and general provisions of contract, including General and Supplementary Conditions and Division 01 Specification Sections, apply to the work of this section.

1.02 SECTION INCLUDES

A. Single application cure-seal-hardener for new concrete floors.

B. Precautions for avoiding staining concrete before and after application.

1.03 RELATED SECTIONS

A. Section 03 30 10 - Concrete Placement: Cast-in-Place Concrete.

1.04 SUBMITTALS

A. Submit under provisions of Section 01 33 00.

B. Material requirements for concrete to which cure-seal-hardener is to be applied, including cement type, water-cement ratio, type of trowel finish, limitations on admixtures, pigments, bonding agents, and bond breakers, etc.

C. Product Data: Manufacturer's data sheets, including product specifications, test data, preparation instructions and recommendations, storage and handling requirements and recommendations, and installation methods.

D. Maintenance instructions, including precautions for avoiding staining after application.

1.05 QUALITY ASSURANCE

A. Installer Qualifications: Applicator experienced with installation of product and certified by manufacturer, or applicator experienced with similar products and providing manufacturer's field technician on site to advise on application procedures; and providing adequate number of skilled workers trained and familiar with application requirements.

1.06 DELIVERY, STORAGE, AND HANDLING

A. Deliver product in factory numbered and sealed drums, with numbers recorded for Owner's records.

B. Store products in manufacturer's unopened drums until ready for installation.

1.07 PROJECT CONDITIONS

A. No satisfactory procedures are available to remove petroleum or rust stains from concrete. Prevention is therefore essential. Take precautions to prevent staining of concrete prior to application of cure-seal-hardener and for minimum of three months after application:

1. Prohibit parking of vehicles on concrete slab.
2. If vehicles must be temporarily parked on slab, place drop cloths under vehicles during entire time parked.
3. If construction equipment must be used for application, diaper all components that might drip oil, hydraulic fluid, or other liquids.
4. Prohibit pipe cutting using pipe cutting machinery on concrete slab.
5. Prohibit temporary placement and storage of steel members on concrete slab.

B. Do not install products under environmental conditions outside manufacturer's absolute limits.

C. Do not use frozen material; thaw and agitate prior to use.

1.08 WARRANTY

A. Provide manufacturer's warranty that a structurally sound concrete surface prepared and treated according to the manufacturer's directions will remain permanently dustproof, hardened and water repellent. If after the specified sealing period the treated surface does not remain dustproof, hardened and water repellent, provide, at manufacturer's expense, sufficient material to reseal defective areas.

PART 2 - PRODUCTS

2.01 MATERIALS

A. Evaporation Control: Monomolecular film forming compound applied to exposed concrete slab surfaces for temporary protection from rapid moisture loss in hot weather conditions.

1. Products: Subject to compliance with requirements, provide one of the following:
    a. Eucobar; the Euclid Chemical Company
    b. E-Con; L & M Construction Chemical, Inc.
    c. Confilm; BASF Building Systems
    d. Sure Film (J-74); Dayton Superior
    e. SikaFilm; Sika Chemical Co.
    f. Pro-Film; Unitex
    g. Sealtight Evapre; W. R. Meadows
    h. US Spec Monofilm ER; US Mix Co.
2. Submit manufacturer's certification that product conforms to the requirements specified and is compatible with all coverings and surface treatments to be applied. Submit any instructions that must be followed prior to any subsequent surface treatments.

B. Liquid Membrane-Forming Curing Compounds:
1. Water-Based Dissipating Resin Type Curing Compound: Curing Compound shall be a dissipating resin type, which chemically breaks down after approximately 4 weeks. Membrane forming compound shall meet ASTM C 309, Types 1 or 1D, Class B with VOC content less than 350 g/L.
    a. Products: Subject to compliance with requirements, provide one of the following:
        1). Kurez DR Vox; the Euclid Chemical Company
        2). L&M Cure R; L&M Construction Chemicals
        3). Hydro Cure 309; Unitex
        4). Sealtight 1100-Clear; W. R. Meadows
        5). US Spec Maxcure Resin Clear; US Mix Co.
    b. Submit manufacturer's certification that product conforms to the requirements specified and is compatible with any covering or surface treatments to be applied. Submit any instructions that must be followed prior to any subsequent surface treatments and floor coverings.

C. Chemical Curing/Floor Hardener Compound: Sodium silicate based compound which reacts with concrete constituents to harden the surface, resulting in a surface having a maximum abrasion coefficient of 0.25 cm3/cm2 when tested in accordance with ASTM C 418.
1. Products: Subject to compliance with requirements, provide one of the following:
    a. Eucosil; the Euclid Chemical Company
    b. Sonosil; BASF Building Systems
    c. Day-Chem S.1-Cure (J-13); Dayton Superior
    d. Chem Hard; L & M Construction Co.
    e. Uni Cure HD; Unitex
    f. Med-Cure; W. R. Meadows
    g. US Spec Permasil; US Mix Co.
2. Submit manufacturer's certification that product conforms to the requirements specified and is compatible with all coverings and surface treatments to be applied. Submit any instructions that must be followed prior to any subsequent surface treatments.

PART 3 - EXECUTION

3.01 FINISH OF FORMED SURFACES

A. General: Formed surfaces shall have the finishes as described below and as shown on the drawings after formwork is removed and repairs made.

B. Matching Sample Finish: Finish on surfaces at locations noted on drawings shall match sample panel furnished to Contractor. Reproduce finish on a 20 square foot mock-up panel in a location designated by Architect/Engineer. Protect mock-up from damage for the duration of project. Approval of mock-up by Architect is required before proceeding with application of finish in project.

C. Definitions and Finish Requirements
1. Surface Finish 1.0 (SF-1.0):
    a. No formwork facing material is specified.

b. Provide surface tolerance Class C (1/2 in.) for permanently exposed and Class D (1 in.) for permanently concealed as specified in ACI 117.

c. Patch voids larger than 1 in. wide or 1/2 in. deep for Class C and voids larger than 1-1/2 in. wide or 1/2 in. deep for class D.

d. Remove projections larger than 1/2 inch for Class C and1.0 inch for Class D.

e. Tie holes need not be patched.

2. Surface Finish 2.0 (SF-2.0):

a. Provide specified formwork-facing material.

b. Patch voids larger than 3/4 in. wide or 1/2 in. deep.

c. Patch tie holes.

d. Remove projections larger than 1/4 in.

e. Provide surface tolerance Class B as specified in ACI 117.

g. Provide mock-up of concrete surface appearance.

3. Surface Finish 3.0 (SF-3.0):

a. Provide specified formwork facing material.

b. Patch voids larger than 3/4 in. wide or 1/2 in. deep.

c. Remove projections larger than 1/8 inch.

d. Patch tie holes.

e. Provide surface tolerance Class A as specified in ACI 117.

f. Provide specified rubbed finish after formwork removal.

g. Provide mock-up of concrete surface appearance.

D. Standard Finish: Provide SF-1.0 on all concrete surfaces not exposed to view in the final condition unless otherwise specified.

E. Exposed Finishes: Provide SF-2.0 on all concrete surfaces exposed to view in final condition unless otherwise specified.

F. Rubbed Finishes: Remove forms as early as permitted by these specifications and perform any necessary repairs and patches.

1. Smooth Rubbed Finish: Provide smooth rubbed finish to scheduled or specified concrete surfaces which have received smooth-form finish treatment, not later than one day after form removal. Moisten concrete surfaces and rub with carborundum brick or other abrasive until a uniform color and texture is produced. Do not apply cement grout other than that created by the rubbing process.

2. Cork-floated Finish: Provide cork-floated finish to scheduled or specified concrete surfaces that have received smooth-form finish treatment.

a. Combine one part portland cement to one part sand meeting the requirement of ASTM C144 or C404, by volume and water and mix to a to consistency of thick paint. Apply stiff to a wet surface, compressing the grout into all voids.

b. Produce the final finish with a cork float using a swirling motion.

3. Grout Cleaned Finish: Provide grout cleaned finish to scheduled or specified concrete surfaces that have received smooth-form finish treatment.

a. Combine one part portland cement to 1-1/2 parts sand meeting the requirements of ASTM C144 and C404 by volume, and 50:50 mixture of acrylic or styrene butadiene based bonding admixture and water to consistency of thick paint. Proprietary additives may be used at Contractor's option. Blend standard portland cement and white Portland cement, amounts determined by trial patches, so that final color of dry grout will closely match adjacent surfaces.

b. Thoroughly wet concrete surfaces and apply grout to coat surfaces and fill small holes. Remove excess grout by scraping and rubbing with clean burlap. Keep damp by fog spray for at least 36 hours after rubbing.

G. Self-Consolidating Concrete Architectural Finish: Use self-consolidating concrete where shown on the plans to produce a smooth, uniform finish upon form removal with no patching, stoning, rubbing or other form of repair, except washing, permitted.

H. Related Unformed Surfaces: At tops of walls, horizontal offsets and similar unformed surfaces occurring adjacent to formed surfaces, strike-off smooth and finish with a texture matching adjacent formed

surfaces. Continue final surface treatment of formed surfaces uniformly across adjacent unformed surfaces, unless otherwise indicated.

3.02 MONOLITHIC SLAB FINISHES

Place, consolidate, strike off, and level concrete, eliminating high spots and low spots, before proceeding with any other finish operation. Do not add water to the surface of the concrete during finishing operation.

A. Scratch Finish: Apply scratch finish to monolithic slab surfaces that are to receive concrete floor topping or mortar setting beds for tile, portland cement terrazzo and other bonded applied cementitious finish flooring material, and as otherwise indicated. After placing slabs, plane surface to tolerance specified below. Slope surfaces uniformly to drains where required. After leveling, roughen surface before final set, with stiff brushes, brooms or rakes.

B. Float Finish: Apply float finish to monolithic slab surfaces to receive trowel finish and other finishes as hereinafter specified, and slab surfaces which are to be covered with membrane or elastic waterproofing, membrane or elastic roofing, or sand-bed terrazzo, and as otherwise indicated. After screeding, consolidating and leveling concrete slabs, do not work surface until ready for floating. Begin floating, using a hand float, a bladed power float equipped with float shoes, or a powered disk float, when the bleed water sheen has disappeared and the concrete surface has stiffened sufficiently to permit the operation. Check and level surface plane to a tolerance as specified below. Cut down high spots and fill low spots. Uniformly slope surfaces to drains. Immediately after leveling, refloat surface to a uniform, smooth, granular texture.

C. Trowel Finish: Apply trowel finish to monolithic slab surfaces to be exposed-to-view, and slab surfaces to be covered with resilient flooring, carpet, ceramic or quarry tile, paint or other thin film finish coating system. After floating, begin first trowel finish operation by hand or power-driven trowel. Begin final troweling when surface produces a ringing sound as trowel is moved over surface. Consolidate concrete surface by final handtroweling operation, free of trowel marks, uniform in texture and appearance, and with a level surface to a tolerance as specified below. Grind smooth surface defects which would telegraph through applied floor covering system.

D. Trowel and Fine Broom Finish: Where ceramic or quarry tile is to be installed with thinset mortar, apply initial trowel finish as specified above, then immediately follow with slightly scarifying surface by fine brooming.

E. Slip-Resistive Broom Finish: Apply slip-resistive broom finish to garage floors and ramps less than 6% slope, exterior concrete platforms, steps and ramps and elsewhere as indicated. Immediately after float finishing, slightly roughen concrete surface by brooming with fiber bristle broom perpendicular to main traffic route. Coordinate required final finish with Architect before application.

F. Roller-Bug Finish: Provide a roller-bug finish with minimum ¼" amplitude to all ramps exceeding a 6% slope. Extend the finish as least 12 feet beyond the beginning and ending of the greater-than-6% ramp. The finish shall be imprinted on the concrete by the use of a roller-bug tamper.

G. Chemical-Hardener Finish: Apply chemical-hardener finish to interior concrete floors where indicated. Apply liquid chemical-hardener after complete curing and drying of the concrete surface. Apply proprietary chemical hardeners, in strict accordance with manufacturer's printed instructions. After final coat of chemical-hardener solution is applied and dried, remove surplus hardener by scrubbing and mopping with water.

H. Liquid Sealer/Densifier Finish: Apply liquid sealer/densifier finish to exposed interior concrete floors where indicated. Apply liquid sealer/densifier after complete curing and drying of the concrete surface and in strict accordance with manufacturer's printed instructions.

I. Penetrating Sealer Finish: Apply a chloride-and-water-repelling-penetrating-sealer finish to surfaces as described below and where indicated on the drawings. Apply liquid penetrating sealer after complete curing and drying of the concrete surface. Apply proprietary sealers in strict accordance with manufacturer's printed instructions. The Contractor shall verify the compatibility of the sealer product with the paint used to stripe parking decks and coordinate the sequencing of the sealing and striping operations. Apply to the following surfaces:

   1. Sloping and horizontal surfaces of parking garages
   2. Top surfaces of exposed exterior balconies

J. Slip-Resistive Aggregate Finish: Apply slip-resistive aggregate finish to concrete stair treads, platforms, ramps and elsewhere as indicated on the Architect's or Structural Drawings.

   1. After completion of float finishing, and before starting trowel finish, uniformly spread 25 lbs. of dampened slip-resistive aggregate per 100 sq. ft. of surface. Tamp aggregate flush with surface using a steel trowel, but do not force below surface. After broadcasting and tamping, apply trowel finishing as herein specified.
   2. After curing, lightly work surface with a steel wire brush, or an abrasive stone, and water to

expose slip-resistive aggregate.

K. Finish of Top of Spread Footings and/or Mat Foundations:

1. Top Surface below Finished Slab: The top of the footing or mat shall be screeded level and smooth with a flatness F-number, FF15 (overall), FF10 (minimum local) and a levelness F-number, FL12 (overall), FL10 (minimum local).

2. Top Surface as Finished Slab: The top surface of a footing or mat that is to serve as the finished slab in the building shall be leveled cured, and surface prepared as specified for the finished floor construction appropriate to the space usage as defined in the Architectural Drawings.

3.03 CONCRETE FINISH MEASUREMENT AND TOLERANCES

A. Testing Procedure: ASTM E 1155

B. Tolerance on Floor Elevations: Construction tolerance on absolute floor elevation from the specified elevation as shown on the drawings shall be as specified below, taken from ACI 117:

1. Slab-on-Grade Construction - ± 3/4".

2. Top surfaces of formed slabs measured prior to removal of supporting shores - ± 3/4".

3. Top surfaces of all other slabs - ± 3/4".

C. Random Traffic Floor Finish Tolerances:

1. Specified overall values for flatness (SOFF) and levelness (SOFL) shall conform to the values listed below for the floor surface classification noted for each slab category noted.

Floor Surface Classification	SOF_F	SOF_L
Conventional	20	15
Moderately Flat	25	20
Flat	35	25
Very Flat	45	35
Super Flat	60	40

2. Minimum local values for flatness (MLFF) and levelness (MLFL) shall equal 3/5 of the SOFF and SOFL values, respectively, unless noted otherwise. The MLFF and MLFL values shall apply to the minimum areas bounded by the column lines and half-column lines, or the minimum areas bounded by the construction and contraction joints, whichever are the smaller areas.

3. The SOFL and MFLL tolerance values shall apply only to level slabs-on-ground or to level, uncambered suspended slabs that are shored such that it cannot deflect from the time the floor is placed to the time it is measured.

4. Slabs specified to slope shall have a tolerance from the specified slope of 3/8" in 10 feet at any point.

D. Construction Requirements to Achieve Specified Floor Finish Tolerances:

1. Forms shall be properly leveled, in good condition and securely anchored including special attention to ends and transitions.

2. Bearing surfaces for straightedges such as form edges or previously pouredslabs shall be kept clean of laitance, sand, gravel, or other foreign elements.

3. Screeds shall be maintained in good condition with true round rolling wheels and level cutting edges. The use of optical sighting equipment such as lasers is recommended for checking levelness and straightness. The Contractor shall promptly adjust or replace equipment when test results indicate substandard work.

4. Highway straightedges are recommended for use in lieu of bullfloats for all slab placement and finishing operations.

E. Contractor Responsibility for Concrete Floor Finish Requirements: Floor finish requirements shown below (flatness and levelness tolerances) are minimum requirements that apply unless stricter requirements are contained in instructions for installation of applied floor products in which case the Contractor is responsible for attaining the values prescribed by the manufacturer of such products.

F. Concrete Floor Finish Tolerance for Slab-on-Grade Construction:

1. Concrete Placement: Concrete shall be placed and screeded to predetermined marks set to elevations prescribed on the drawings.

2. Finish Tolerances of Random Traffic Floor Surfaces:

a. Slabs in nonpublic areas, mechanical rooms, surfaces to received raised computer flooring, surfaces to have thick-set tile or a topping, and parking structures:

Conventional

b. Carpeted Areas: Moderately Flat

c. Industrial Slabs: Moderately Flat

d. Exposed slabs in public spaces, slabs to receive thin-set flooring: Flat

e. Ice or Roller rinks: Very Flat

f. Movie or Television studios: Super Flat

g. Gymnasium Floors Scheduled to Receive Wood Playing Floor: Very Flat

G. Concrete Floor Finish Tolerance for Shored, Cast-in-Place Suspended Slab Construction:

1. Concrete Placement: Formwork shall be set and securely braced so that soffits are positioned to allow scheduled concrete member sizes and thicknesses within tolerances specified in ACI 117. Concrete shall be placed and screeded to predetermined marks on the form surface conforming to elevations prescribed on the drawings.

2. Camber: Formwork camber, as indicated on the drawings, shall be set to provide a uniform, smooth soffit profile in each direction. Minimum slab thickness, as specified on the drawings, shall be maintained throughout the slab surface to a tolerance as specified in ACI 117. Tolerance on camber shall be ± 1/4". Levelness F-Number tolerances specified below does not apply to areas of the floor where camber or intentional slope is shown.

3. Finish Tolerances of Random Traffic Floor Surfaces:

a. Slabs in nonpublic areas, mechanical rooms, surfaces to received raised computer flooring, surfaces to have thick-set tile or a topping, and parking structures: Conventional

b. Carpeted Areas: Moderately Flat

c. Exposed slabs in public spaces, slabs to receive thin-set flooring: Flat

d. Movie or Television studios: Super Flat

4. Extra Concrete: The contractor shall include in his bid any additional concrete required to achieve the specified slab surface finish tolerance.

5. Concrete Placement at Column Bays Supported by unshored transfer girders: Concrete in floor areas supported by unshored transfer girders shall be placed and screeded to predetermined marks placed over the slab conforming to elevations as specified on the drawings. At least the minimum slab thickness, as specified on the drawings, shall be maintained throughout the slab surface. The Contractor shall conform to the FF values specified above.

H. Concrete Floor Finish Tolerance - Unshored Metal Deck on Shored or Unshored Steel Beam or Open-Web Joist Floor Construction:

1. Concrete Placement: Concrete over metal deck shall be placed and screeded level and flat to the tolerance specified below, maintaining at least the minimum slab thickness at all locations as specified on the drawings. The Contractor shall increase the slab thickness as required to compensate for metal deck deflection, and in unshored beam construction, residual beam camber and beam deflection in order to achieve a level and flat floor within specified tolerances.

2. Finish Tolerance of Random Traffic Floor Surfaces:

a. Slabs in nonpublic areas, mechanical rooms, surfaces to received raised computer flooring, surfaces to have thick-set tile or a topping, and parking structures: Conventional

b. Carpeted Areas: Moderately Flat

c. Exposed slabs in public spaces, slabs to receive thin-set flooring: Flat

d. Movie or Television studios: Super Flat

e. Eighty percent (80%) of the final floor surface shall fall within an envelope of 0.75" centered about the mean elevation of all the readings. (± 0.375 about mean). The mean elevation of all readings shall not deviate from the specified design grade by more than ± 0.375".

3. Extra Concrete: The contractor shall include in his bid any additional concrete required to achieve the specified slab surface finish tolerance and to compensate for metal deck deflection, beam camber and beam deflection.

4. Concrete Placement at Column Bays Supported on Transfer Girders or Trusses: Concrete in floor areas supported by transfer girders or trusses shall be placed and screeded to predetermined marks placed over the metal deck slab conforming to elevations as specified on the drawings. At

least the minimum slab thickness, as specified on the drawings, shall be maintained throughout the slab surface. The Contractor shall conform to the F_F values specified above.

I. Remedial Measures for Slab Finish Construction Not Meeting Specified Tolerances:

1. Application of Remedial Measures. Remedial measures specified herein are required whenever either or both of the following occur:

a. The composite overall values of F_F or F_L of the entire floor installation measure less than specified values.

b. Any individual test section measures less than the specified absolute minimum F_F or F_L value.

2. Modification of Existing Surface:

a. If, in the opinion of the Architect/Engineer or Owner's Representative, all or any portion of the substandard work can be repaired without sacrifice to the appearance or serviceability of the area, then the Contractor shall immediately undertake the approved repair method.

b. The Contractor shall submit for review and approval a detailed work plan of the proposed repair showing areas to be repaired, method of repair and time to affect the repair.

c. Repair method(s), at the sole discretion of the Architect/Engineer or Owner's Representative, may include grinding (floor stoning), planing, retopping with self leveling underlayment compound or repair topping, or any combination of the above.

d. The Architect/Engineer or Owner's Representative maintains the right to require a test repair section using the approved method of repair for review and approval to demonstrate a satisfactory end product. If, in the opinion of the Architect/Engineer or Owner's Representative, the repair is not satisfactory an alternate method of repair shall be submitted or the defective area shall be replaced.

e. The judgment of the Architect/Engineer or Owner's Representative on the appropriateness of a repair method and its ability to achieve the desired end product shall be final.

f. All repair work shall be performed at no additional cost to the Owner and with no extension to the construction schedule.

3. Removal and Replacement:

a. If, in the opinion of the Architect/Engineer or Owner's Representative, all or any portion of the substandard work cannot be satisfactorily repaired without sacrifice to the appearance or serviceability of the area, then the Contractor shall immediately commence to remove and replace the defective work.

b. Replacement section boundaries shall be made to coincide with the test section boundaries as previously defined.

c. Sections requiring replacement shall be removed by sawcutting along the section boundary lines to provide a neat clean joint between new replacement floor and existing floor.

d. The new section shall be reinforced the same as the removed section and doweled into the existing floor as required by the Engineer. No existing removed reinforcing steel may be used. All reinforcing steel shall be new steel.

e. Replacement sections may be retested for compliance at the discretion of the Architect/Engineer or Owner's Representative.

f. The judgment of the Architect/Engineer or Owner's Representative on the need for replacement shall be final.

g. All replacement work shall be performed at no additional cost to the Owner and with no extension to the construction schedule.

END OF SECTION

PART 1 - GENERAL

1.01 RELATED DOCUMENTS

A. Drawings and general provisions of contract, including General and Supplementary Conditions and Division 01 Specification Sections, apply to the work of this section.

1.02 SECTION INCLUDES

A. Concrete curing requirements.

1.03 REFERENCES
(Current Edition at Date of Bid)

A. ACI 301: Specifications for Structural Concrete for Buildings

B. ACI 305: Hot Weather Concreting.

C. ACI 306: Cold Weather Concreting

D. ASTM C 171: Standard Specification for Sheet Materials for Curing Concrete.

E. ASTM C 1315: Standard Specification for Liquid Membrane-Forming Compounds Having Special Properties for Curing and Sealing Concrete.

1.04 SUBMITTALS

A. Curing agent data sheet.

B. Curing plan. Describe estimated cure quantity and procedure.

C. Manufacturer certificates, Section 01 33 00 that shows product meets performance criteria.

D. Manufacturer's recommended installation procedures which, when accepted by ENGINEER, will become the basis for accepting or rejecting installed product.

1.05 QUALITY ASSURANCE

A. Use workers knowledgeable of ACI 301, 305, 306.

1.06 PRODUCT HANDLING

A. Protect materials of this section before, during, and after installation.

B. Protect the work and materials of other trades.

C. In the event of damage, immediately make replacements and repair at no additional cost to Owner.

1.07 WEATHER LIMITATIONS

A. Above 75 deg. F., ACI 305

B. Below 55 deg. F., ACI 306.

PART 2 - PRODUCTS

2.01 COVERS

A. Water or Fog-spay: Clean, non-staining and non-detrimental to concrete.

B. Sheet Coverings: White waterproof paper, polyethylene film, or polyethylene coated burlap sheet complying with ASTM C 171.

C. Mat Coverings: Clean roll goods of cotton or burlap fabric. D. Insulating Coverings: Non-staining curing blankets.

2.02 MEMBRANE FORMING COMPOUND

A. Material.

1. Styrene-acrylic.
2. Styrene-butadiene.
3. Alpha-methylstyrene.

B. Performance Criteria: ASTM C 1315 compound.

1. Type ID Class A (clear with fugitive dye), or
2. Type II Class A or B (white pigmented).

C. Volatile Organic Compounds (VOC): Comply with local, state and federal requirements.

PART 3 - EXECUTION

3.01 PREPARATION

A. Do not use membrane forming curing compound on surfaces that are to receive hardeners.

B. Commence curing operation within 20 minutes after finishing.

C. Do not allow vehicular traffic on newly paved areas until concrete has reached 90% of design concrete strength.

3.02 APPLICATION

A. General:

1. Protect freshly placed concrete from premature drying and excessive cold or hot temperatures. Maintain concrete with minimal moisture loss at a relatively constant temperature for the period necessary for hydration of the cement and hardening of concrete. Limit moisture loss to a maximum of 0.05 lb. /sq. ft - hr for concrete containing silica fume and 0.2 lb. /sq. ft. - hr for all other concrete before and during finishing operations. If using an evaporation retarder, apply in accordance with manufacturer's instructions after screeding and bull floating, but before power floating and troweling.

2. Curing shall commence as soon as free water has disappeared from the concrete surface after placing and finishing. The curing period shall be 7 days for all concrete except high early strength concrete which shall be cured for 3 days minimum.

   Alternatively, curing times may be reduced if either of the following provisions is complied with:

   a. If tests are made of cylinders kept adjacent to the structure and cured by the same methods, curing measures may be terminated when the average compressive strength has reached 70% of the specified 28 day compressive strength.

   b. If the temperature of the concrete is maintained at a minimum of 50°F for the same length of time required for laboratory cured cylinders of the same concrete to reach 85% of the 28 day compressive strength, then curing may be terminated thereafter.

3. Curing shall be in accordance with ACI 301 procedures. Avoid rapid drying at the end of the curing period.

B. Curing Formed Surfaces: Where wooden forms are used, cure formed concrete surfaces, including undersides of beams, supported slabs and other similar surfaces by moist curing with forms in place for full curing period or until forms are removed. When forms are removed, continue curing by one or a combination of the methods specified below, as applicable.

1. Columns and shearwalls that are not exposed to view: Moist cure in forms or by one or a combination of methods 1, 2, or 3 specified below. Use a high –solids, liquid membrane-forming curing and sealing compound conforming to ASTM C 1315, type I, Class A or B for method 3.

2. Columns and shearwalls that are exposed to view: Moist cure in forms or by one or a combination of methods 1, 2 or 3 specified below. Use a high-solids, nonyellowing, liquid membrane-forming curing and sealing compound conforming to ASTM C 1315, type 1, class A for method 3.

3. Sides and Soffits of Beams and Pan-Joist Ribs, Soffits of Slabs: Moist cure in forms or by one or a combination of methods 1, 2 or 3 specified below. Use a liquid membrane-forming dissipating resin curing compound conforming to ASTM C 309, type 1, class A or B for method 3.

4. Basement Walls, Sides of Exterior Retaining Walls: Moist cure in forms or by one or a combination of methods 1, 2 or 3 specified below. Use a liquid membrane forming dissipating resin curing compound conforming to ASTM C 309, type 1, class A or B for method 3.

C. Curing Unformed Surfaces: Cure unformed surfaces, such as slabs, floor topping and other flat surfaces by one or a combination of the methods specified below, as applicable. The Contractor shall choose a curing method that is compatible with the requirements for subsequent material usage on the concrete surface.

1. Ramps and Horizontal Surfaces of Parking Areas, Exposed Exterior Balconies: Cure using only methods 1 or 2 as specified below.

2. Floors Directly Exposed to Vehicular or Foot Traffic not in Parking Areas and not otherwise receiving a chemical hardener or penetrating sealer finish: Apply two coats of a high-solids, water-based, non-yellowing, liquid membrane-forming curing and sealing compound conforming to ASTM C 1315, type 1, Class A in accordance with method 3 as specified below.

3. Floors in Non-Public spaces that are left exposed to view and not receiving sealers or hardeners, floors involved in under-floor air distribution systems: Apply one coat of a high-solids, water-based, non-yellowing, liquid membrane forming curing and sealing compound conforming to

ASTM C 1315, type 1, Class A or B in accordance with method 3 as specified below.

4. Floors that are to receive subsequent cementitious toppings, sealers, hardeners, ceramic tile, acrylic terrazzo, vinyl composition tile, sheet vinyl, linoleum, vinyl backed carpet, rubber, athletic flooring, synthetic turf, wood, epoxy overlay or adhesive, or other coating or finishing products: Cure using methods 2 or 3 as specified below. Use a water-based dissipating resin type curing compound conforming to ASTM C 309, type 1, class A or B for method 3.

5. Industrial Slabs: Cure using methods 1 or 2 as specified below for 7 days. The temperature of applied water shall be with 10◦ F of concrete surface temperature.

6. All Other Surfaces: Cure using methods 1, 2 or 3 as specified below. Use a water-based dissipating resin type curing compound conforming to ASTM C 309, type 1, class A or B for method 3.

D. Curing Methods:

1. Method 1 - Moisture Curing: Provide moisture curing by one of the following methods:

a. Keep concrete surface continuously wet by covering with water.

b. Continuous water-fog spray.

c. Covering concrete surface with specified absorptive cover, thoroughly saturating cover with water and keeping continuously wet. Place absorptive cover to provide coverage of concrete surfaces and edges, with 4" lap over adjacent absorptive covers.

2. Method 2 - Moisture-Retaining Cover Curing: Provide moisture-retaining cover curing as follows:

a. Cover concrete surfaces with moisture-retaining cover for curing concrete, placed in widest practicable width with sides and ends lapped at least 3" and sealed by waterproof tape or adhesive. Immediately repair any holes or tears during curing period using cover material and waterproof tape. Water may be added to concrete surface to prevent drying before the cover is installed, but the surface shall not be flooded with water if a non-absorptive cover is used.

3. Method 3 – Curing or Curing and Sealing Compound: Provide curing, curing/hardener, liquid membrane-forming curing, or curing and sealing compound as follows:

a. Apply specified compound to concrete slabs as soon as final finishing operations are complete (within 2 hours and after surface water sheen has disappeared). Apply uniformly in continuous operation by power-spray or roller in accordance with manufacturer's directions. Do not allow to puddle. Recoat areas subjected to heavy rainfall within 3 hours after initial application. Maintain continuity of coating and repair damage during curing period. Apply second coat for sealing 2 to 3 hours after the first coat was applied.

4. Do not use membrane-forming curing and sealing compounds on surfaces which are to be covered with coating material applied directly to concrete, liquid floor hardener, waterproofing, dampproofing, membrane roofing, flooring (such as ceramic or quarry tile, glued-down carpet, vinyl composition tile, linoleum, sheet vinyl, rubber, athletic flooring, synthetic turf, or wood), paint or other coatings and finish materials. Dissipating resin type cures are acceptable in these locations.

3.04 CONCRETE CURE TEMPERATURE

A. During cure period, eliminate thermal shock of concrete by keeping cure temperature even throughout extent and depth of concrete.

END OF SECTION

PART 1 - GENERAL

1.01 RELATED DOCUMENTS

A. Drawings and general provisions of the Contract, including General and Supplementary Conditions and Division 01 Specification Sections, apply to this Section.

1.02 SECTION INCLUDES

A. Mortar for masonry.

B. Grout for masonry.

1.03 RELATED WORK:

A. Mortar and Grout used in Section:

1. Section 04 21 13 - BRICK MASONRY.
2. Section 04 22 00 - UNIT MASONRY.

B. Color(s): As selected by Architect from manufacturer's full range.

1.04 TESTING LABORATORY CONTRACTOR RETAINED

A. Engage an independent test agency, in accordance with provisions of Section01 45 33.

1.05 TESTS

A. Test mortar, grout and materials specified.

B. Certified test reports.

C. Identify materials by type, brand name and manufacturer or by origin.

D. Do not use materials until laboratory test reports are approved by Architect.

E. After tests have been made and materials approved, do not change without additional test and approval of Architect.

F. Testing:

1. Test materials proposed for use for compliance with specifications in accordance with test methods contained in referenced specifications and as follows:
2. Mortar:
   a. Test for compressive strength and water retention; ASTM C270.
3. Grout:
   a. Test for compressive strength; ASTM C1019.
4. Cement:
   a. Test for water soluble alkali (nonstaining) when nonstaining cement is specified.
   b. Nonstaining cement shall contain not more than 0.03 percent water soluble alkali.
5. Sand: Test for deleterious substances, organic impurities, soundness and grading.

G. Testing procedures and test methods in accordance with ASTM C780.

1.06 SUBMITTALS

A. See Section01 3000 - Administrative Requirements, for submittal procedures.

B. Product Data: Include design mix and indicate whether the Proportion or Property specification of ASTM C270 is to be used. Also include required environmental conditions and admixture limitations.

C. Samples: Submit two samples of mortar, illustrating mortar color and color range.

D. Reports: Submit reports on mortar indicating conformance of mortar to property requirements of ASTM C 270and test and evaluation reports per ASTM C 780.

E. Reports: Submit reports on grout indicating conformance of component grout materials to requirements of ASTM C476and test and evaluation reports to requirements of ASTM C 1019.

F. Manufacturer's Certificate: Certify that products meet or exceed specified requirements.

G. Manufacturer's Instructions: Submit packaged dry mortar manufacturer's installation instructions.

1.07 PRODUCT DELIVERY, STORAGE AND HANDLING

A. Deliver masonry materials in original sealed containers marked with name of manufacturer and

identification of contents.

B. Store masonry materials under waterproof covers on planking clear of ground, and protect damage from handling, dirt, stain, water and wind.

1.08 APPLICABLE PUBLICATIONS

(Current Edition at Date of Bid))

A. Publications listed below form a part of specification to extent referenced. Publications are referenced in text by basic designation only.

B. American Society for Testing and Materials (ASTM):

1. C40 Organic Impurities in Fine Aggregates for Concrete
2. C91 Masonry Cement
3. C109 Compressive Strength of Hydraulic Cement Mortars (Using 2 in. or 50 MM Cube Specimens)
4. C144 Aggregate for Masonry Mortar
5. C150 Portland Cement
6. C207 Hydrated Lime for Masonry Purposes
7. C270 Mortar for Unit Masonry
8. C307 Tensile Strength of Chemical - Resistant Mortar, Grouts, and Monolithic Surfacing
9. C321 Bond Strength of Chemical Resistant Mortars
10. C348 Flexural Strength of Hydraulic Cement Mortars
11. C404 Aggregate for Masonry Grout
12. C476 Grout for Masonry
13. C595 Blended Hydraulic Cement
14. C780 Preconstruction and Construction Evaluation of Mortars for Plain and Reinforced Unit Masonry
15. C979 Pigments for Integrally Colored Concrete
16. C1019 Sampling and Testing Grout
17. C1329 Mortar Cement

1.09 QUALITY ASSURANCE

A. Comply with provisions of ACI 530/530.1/ERTA, except where exceeded by requirements of the contract documents.

1. Maintain one copy of each document on project site.

1.10 FIELD CONDITIONS

A. Cold and Hot Weather Requirements: Comply with requirements of ACI 530/530.1/ERTA or applicable building code, whichever is more stringent.

B. Maintain materials and surrounding air temperature to minimum 40 degrees F prior to, during, and 48 hours after completion of masonry work.

C. Maintain materials and surrounding air temperature to maximum 90 degrees F prior to, during, and 48 hours after completion of masonry work.

PART 2 - PRODUCTS

2.01 MORTAR AND GROUT APPLICATIONS

A. Mortar Mix Designs: ASTM C270, Property Specification.

2.02 MATERIALS

A. Masonry Cement: ASTM C91, types as scheduled in this section.

1. Colored mortar: Premixed cement as required to match Architect’s color sample.

B. Portland Cement: ASTM C150, Type I or II; except Type III may be used for cold-weather construction, Provide natural color or white cement as required to produce approved color sample.

C. Hydrated Lime: ASTM C207, Type S.

D. Mortar Aggregate: ASTM C144.

1. For mortar that is exposed to view, use washed aggregate consisting of natural sand or crushed stone.

2. For joints less than 1/4 inch thick, use aggregate graded with 100 percent passing the No. 16 sieve.

3. White-Mortar Aggregates: Natural white sand or crushed white stone.

4. Colored-Mortar Aggregates: Natural sand or crushed stone of color necessary to produce required mortar color.

E. Grout Aggregate: ASTM C404.

F. Pigments for Colored Mortar: Pure, concentrated mineral pigments specifically intended for mixing into mortar and complying with ASTM C979.

1. Color(s): To match Architect's sample(s) when incorporated into specified mix design(s).

G. Water: Clean and potable, free of substances that are detrimental to mortar, masonry, and metal.

H. Accelerating Admixture: Non-chloride type for use in cold weather.

I. Moisture-Resistant Admixture: Water repellent compound designed to reduce capillarity.

J. Bonding Agent: Latex type.

2.03 MORTAR MIXES

A. Ready Mixed Mortar: ASTM C1142, Type RM, RS, or RN

B. Mortar for Unit Masonry: ASTM C270, Property Specification.

1. Engineered masonry: Type M.

2. Masonry below grade and in contact with earth: Type S.

3. Exterior, loadbearing masonry: Type N.

4. Exterior, non-loadbearing masonry: Type N.

5. Interior, loadbearing masonry: Type N.

6. Interior, non-loadbearing masonry: Type O.

7. Pointing mortar: Type N with maximum 2 percent ammonium stearate or calcium stearate per cement weight.

C. Do not use anti-freeze compounds to lower the freezing point of mortar.

D. If water is lost by evaporation, re-temper only within two hours of mixing.

E. Use mortar with-in two hours of initial mixing at temperatures of 90 degrees F., or two-and-one-half hours at temperatures under 40 degrees F.

2.04 GROUT MIXES

A. Bond Beams, Lintels, and Grouted Cells: 3,000 psi strength at 28 days; 8-10 inches slump; provide premixed type in accordance with ASTM C 94/C 94M.

1. Fine grout for spaces with smallest horizontal dimension of 2 inches or less.

2. Course grout for spaces with smallest horizontal dimension greater than 2 inches.

2.05 GROUT MIXING

A. Mix grout in accordance with ASTM C94/C94M.

B. Thoroughly mix grout ingredients in quantities needed for immediate use in accordance with ASTM C476 for fine and coarse grout.

C. Add admixtures in accordance with manufacturer's instructions; mix uniformly.

D. Do not use anti-freeze compounds to lower the freezing point of grout.

2.06 PRECONSTRUCTION TESTING

A. Testing will be conducted by an independent test agency, in accordance with provisions of Section 01 45 33.

B. Mortar Mixes: Test mortars prebatched by weight in accordance with ASTM C780 recommendations for preconstruction testing.

1. Test results will be used to establish optimum mortar proportions and establish quality control values for construction testing.

C. Grout Mixes: Test grout batches in accordance with ASTM C1019 procedures.

1. Test results will be used to establish optimum grout proportions and establish quality control values for construction testing.

PART 3 - EXECUTION

3.01 PREPARATION

A. Apply bonding agent to existing concrete surfaces.

B. Plug clean-out holes for grouted masonry with brick masonry units. Brace masonry to resist wet grout pressure.

3.02 INSTALLATION

A. Install mortar and grout to requirements of section(s) in which masonry is specified.

B. Work grout into masonry cores and cavities to eliminate voids.

C. Do not install grout in lifts greater than 16 inches without consolidating grout by rodding.

D. Do not displace reinforcement while placing grout.

E. Remove excess mortar from grout spaces.

3.03 GROUTING

A. Use either high-lift or low-lift grouting techniques, at contractor's option, subject to other limitations of contract documents.

B. Low-Lift Grouting:

1. Limit height of pours to 12 inches.
2. Limit height of masonry to 16 inches above each pour.
3. Pour grout only after vertical reinforcing is in place; place horizontal reinforcing as grout is poured. Prevent displacement of bars as grout is poured.
4. Place grout for each pour continuously and consolidate immediately; do not interrupt pours for more than 1-1/2 hours.

C. High-Lift Grouting:

1. Verify that horizontal and vertical reinforcement is in proper position and adequately secured before beginning pours.
2. Hollow Masonry: Limit lifts to maximum 4 feet and pours to maximum height of 24 feet.
3. Place grout for spanning elements in single, continuous pour.

3.04 FIELD QUALITY CONTROL

A. An independent testing agency will perform field tests, in accordance with provisions of Section 01 40 00.

B. Test and evaluate mortar in accordance with ASTM C780 procedures.

C. Test and evaluate grout in accordance with ASTM C1019 procedures.

D. Prism Tests: Test masonry and mortar panels for compressive strength in accordance with ASTM C1314, and for flexural bond strength in accordance with ASTM C1072 or ASTM E518; perform tests and evaluate results as specified in individual masonry sections.

END OF SECTION

PART 1 - GENERAL

1.01 RELATED DOCUMENTS

A. Drawings and general provisions of the Contract, including General and Supplementary Conditions and Division 01 Specification Sections, apply to this Section.

1.02 SUMMARY

A. Section Includes:

1. Face brick.

1.03 SUBMITTALS

A. Product Data: For each type of product indicated.

B. Samples: For each type and color of brick and colored mortar.

1.04 QUALITY ASSURANCE

A. Masonry Standard: Comply with ACI 530.1/ASCE 61TMS 602 unless modified by requirements in the Contract Documents.

B. Sample Panels: Build sample panels to verify selections made under sample submittals and to demonstrate aesthetic effects. Comply with requirements in Division 01 Section "Quality Requirements" for mockups.

1. Build sample panels for each type of exposed unit masonry construction in sizes approximately 48 inches long by 60 inches high by full thickness.
2. Locate mockups on site in locations directed by Architect.
3. Include weep holes.
4. Include joint treatment and mortar colors.
5. Form expansion joint and one outside corner.
6. Notify Architect one week in advance of when mockups will be constructed.
7. Protect accepted mockups from the elements with weather-resistant membrane.
8. Maintain mockups during construction in an undisturbed condition as a standard for judging the completed work. When directed by Architect, demolish and remove mockups from Project Site.
9. Approval of mockups does not constitute approval of deviations from the Contract Documents contained in mockups unless Architect specifically approves such deviations in writing.

1.05 PROJECT CONDITIONS

A. Cold-Weather Requirements: Do not use frozen materials or materials mixed or coated with ice or frost. Do not build on frozen substrates. Remove and replace unit masonry damaged by frost or by freezing conditions. Comply with cold-weather construction requirements contained in ACI 530.1/ASCE 6/TMS 602.

1. Cold-Weather Cleaning: Use liquid cleaning methods only when air temperature is 40 deg. F and higher and will remain so until masonry has dried, but not less than seven days after completing cleaning.

B. Hot-Weather Requirements: Comply with hot-weather construction requirements contained in ACI 530.1/ASCE 6/TMS 602.

PART 2 - PRODUCTS

2.01 MASONRY UNITS, GENERAL

A. Defective Units: Referenced masonry unit standards may allow a certain percentage of units to contain chips, cracks, or other defects exceeding limits stated in the standard. Do not use units where such defects will be exposed in the completed Work.

2.02 BRICK

A. General: Provide shapes indicated and as follows.

1. For ends of sills and caps and for similar applications that would otherwise expose unfinished brick surfaces, provide units without cores or frogs and with exposed surfaces finished.
2. Provide special shapes for applications where shapes produced by sawing would result in sawed

surfaces being exposed to view.

3. Provide special shapes for applications requiring brick of size, form, color, and texture on exposed surfaces that cannot be produced by sawing.

4. Provide special shapes for applications where shapes produced by sawing would result in sawed surfaces being exposed to view.

B. Face Brick: Facing brick complying with ASTM C 216.

1. Products: Subject to compliance with requirements, available products that may be incorporated into the Work include, but are not limited to, the following:

a. Trinity Brick; http://www.trinitybrick.com/

b. Sioux City Brick; http://www.siouxcitybrick.com/

c. Belden Brick; http://www.beldenbrick.com/

d. Boral Bricks, Inc.; http://www.boralamerica.com/

e. Substitutions: See section 01 25 00 - Substitutions Procedures.

2. Grade: SW.

3. Type: FBS.

4. Initial Rate of Absorption: Less than 30 g/30 sq. in. per minute when tested per ASTM C 67.

5. Efflorescence: Provide brick that has been tested according to ASTM C 67 and is rated "not effloresced."

6. Surface Coating: Brick with colors or textures produced by application of coatings shall withstand 50 cycles of freezing and thawing per ASTM C 67 with no observable difference in the applied finish when viewed from 10 feet.

7. Size (King, Actual Dimensions): 2-3/4 inches wide by 2-5/8 inches high by 9-5/8 inches long.

8. Color and Texture: The Architect will select color, pattern and texture from the manufacturer's standard product line

2.03 TIES AND ANCHORS

A. Acceptable Manufacturers:

1. Manufacturers: Subject to compliance with requirements, provide products by one of the following:

a. Dur-O-Wal; a Hohmann & Barnard company.

b. Heckmann Building Products, Inc.

c. Hohmann & Barnard, Inc.

d. Wire-Bond.

e. FERO Corporation.

2. Substitutions: Under provisions of Section 01 25 00.

B. General: Ties and anchors shall extend at least 1-1/2 inches (38 mm) into veneer but with at least a 5/8-inch (16-mm) cover on outside face.

C. Materials: Provide ties and anchors specified in this article that are made from materials that comply with the following unless otherwise indicated:

1. Hot-Dip Galvanized, Carbon-Steel Wire: ASTM A 82/A 82M; with ASTM A 153/A 153M, Class B-2 coating.

2. Steel Sheet, Galvanized after Fabrication: ASTM A 1008/A 1008M, Commercial Steel, with ASTM A 153/A 153M, Class B coating.

3. Stainless-Steel Sheet: ASTM A 666, Type 304

4. Steel Plates, Shapes, and Bars: ASTM A 36/A 36M.

5. Stainless-Steel Bars: ASTM A 276 or ASTM a 666, Type 304.

D. Adjustable Masonry-Veneer Anchors:

1. Metal PBR Backup:

a. General: Provide anchors that allow vertical adjustment but resist a 100-lbf (445-N) load in both tension and compression perpendicular to plane of wall without deforming or developing play in excess of 1/16 inch (1.5 mm).

b. Fabricate sheet metal anchor sections and other sheet metal parts from 0.105-inch-(2.66-mm-) thick steel sheet, galvanized after fabrication.

c. Fabricate wire ties from 0.25-inch- (6.35-mm-) diameter, hot-dip galvanized-steel wire unless otherwise indicated.

d. Fabricate wire connector sections from 0.25-inch- (6.35-mm-) diameter, hot-dip galvanized, carbon steel wire.

e. Provide anchor at center of PBR panel valley 24” @ center horizontal, and 16” @ center vertical, ensure every 48” anchors are screwed to metal girts and base chanel.

f. Provide X-Seal self-sealing tape center at each anchor hole on the face in contact with PBR panel and large enough to cover whole width. Screws should be self-drilling, self-tapping, corrosion resistant as furnished by anchor manufacturer.

g. Screw-Attached, Masonry-Veneer Anchors: Wire tie and a sheet metal anchor section, 1-1/4 inches (32 mm) wide by 6 inches (152 mm) long, with screw holes top and bottom and with raised rib-stiffened strap, 5/8 inch (16 mm) wide by 3-5/8 inches (92 mm) long, stamped into center to provide a slot between strap and base for inserting wire tie.

1). Basis-of-Design Product: Subject to compliance with requirements, provide Wire-Bond; 1004, Type III or comparable product.

h. Polymer-Coated, Steel Drill Screws: ASTM C 954 except manufactured with hex washer head and neoprene or EPDM washer, No. 10 (4.83-mm) diameter by length required to penetrate steel stud flange with not less than three exposed threads, and with organic polymer coating with salt-spray resistance to red rust of more than 800 hours according to ASTM B 117.

1). Basis-of-Design Product: Subject to compliance with requirements, provide Wire-Bond; Climaseal Screws or a comparable product.

2.04 EMBEDDED FLASHING MATERIALS

A. Metal Flashing: Provide metal flashing complying with SMACNA's "Architectural Sheet Metal Manual "and as follows:

1. Metal Drip Edge: Fabricate from stainless steel. Extend at least 3 inches into wall and 1/2 inch out from wall, with outer edge bent down 30 degrees and hemmed.

2. Metal Sealant Stop: Fabricate from stainless steel. Extend at least 3 inches into wall and out to exterior face of wall. At exterior face of wall, bend metal back on itself for 3/4 inch and down into joint 1/4 inch to form a stop for retaining sealant backer rod.

3. Fabricate through-wall flashing with drip edge where indicated. Fabricate by extending flashing 1/2 inch out from wall, with outer edge bent down 30 degrees and hemmed.

4. Fabricate through-wall flashing with sealant stop where indicated. Fabricate by bending metal back on itself 3/4 inch at exterior face of wall and down into joint 1/4 inch to form a stop for retaining sealant backer rod.

5. Metal Expansion-Joint Strips: Fabricate from copper to shapes indicated.

B. Flexible Flashing: Use the following unless otherwise indicated:

1. See section 07 65 23

C. Application: Unless otherwise indicated, use the following:

1. Where flashing is indicated to receive counterflashing, use metal flashing.

2. Where flashing is indicated to be turned down at or beyond the wall face, use metal flashing.

3. Where flashing is partly exposed and is indicated to terminate at the wall face, use metal flashing with a drip edge or flexible flashing with a metal drip edge.

4. Where flashing is fully concealed, use metal flashing or flexible flashing.

D. Solder and Sealants for Sheet Metal Flashings: As specified in Division 07 Section "Sheet Metal Flashing and Trim."

E. Adhesives, Primers, and Seam Tapes for Flashings: Flashing manufacturer's standard products or products recommended by flashing manufacturer for bonding flashing sheets to each other and to substrates.

2.05 MISCELLANEOUS MASONRY ACCESSORIES

A. Control Joints: Preformed rubber material; RS Series conforming to ASTM 2000 2AA-805, size as required.

B. Compressible Filler: Premolded filler strips complying with ASTM D 1056, Grade 2A1; compressible up to 35 percent; formulated from neoprene.

C. Bond-Breaker Strips: Unless otherwise indicated , use asphalt-saturated, organic roofing felt complying with ASTM D 226, Type I (No. 15 asphalt felt).

D. Mortar Net: High density polyethylene (HDPE), 90% open mesh, dovetail shape. Size as required for cavity

opening.

1. Provide the following configuration:
    a. Strips, full-depth of cavity and 10 inches high, with dovetail shaped notches 7 inches deep.

E. Weep Holes: Use one of the following unless otherwise indicated:

1. Cellular Plastic Weep/Vent: One-piece, flexible extrusion made from UV-resistant polypropylene copolymer, full height and width of head joint and depth 1/8 inch less than depth of outer wythe, in color selected from manufacturer's standard.
    a. Products: Subject to compliance with requirements, available products that may be incorporated into the Work include, but are not limited to, the following:
        1). Advanced Building Products Inc.; Mortar Maze weep vent.
        2). Blok-Lok Limited; Cell-Vent.
        3). Dayton Superior Corporation, Hohmann & Barnard; Cell Vents.
        4). Heckmann Building Products Inc.; No. 85 Cell Vent.
        5). Hohmann & Barnard, Inc.; Quadro-Vent.
        6). Wire-Bond; Cell Vent.
2. Vinyl Weep Hole/Vent: One-piece, offset, T-shaped units made from flexible PVC, designed to fit into a head joint and consisting of a louvered vertical leg, flexible wings to seal against ends of masonry units, and a top flap to keep mortar out of the head joint; in color selected by Architect.
    a. Products: Subject to compliance with requirements, available products that may be incorporated into the Work include, but are not limited to, the following:
        1). Hohmann & Barnard, Inc.; #343 Louvered Weep Hole.
        2). Williams Products, Inc.; Williams-Goodco Brick Vent.
        3). Wire-Bond; Louvered Weepholes.
3. Substitutions: See Section 01 25 00 - Substitution Procedures.

F. Flashing: As per Section 07 65 23.

G. Other accessories as may be required for work of this section.

2.06 MASONRY CLEANERS

A. Proprietary Acidic Cleaner: Manufacturer's standard-strength cleaner designed for removing mortar/grout stains, efflorescence, and other new construction stains from new masonry without discoloring or damaging masonry surfaces. Use product expressly approved for intended use by cleaner manufacturer and manufacturer of masonry units being cleaned.

2.07 MORTAR MIXES

A. General: Do not use admixtures, including pigments, air-entraining agents, accelerators, retarders, water-repellent agents, antifreeze compounds, or other admixtures unless otherwise indicated.

1. Do not use calcium chloride in mortar.
2. Use portland cement-lime mortar unless otherwise indicated.
3. Add cold-weather admixture (if used) at same rate for all mortar that will be exposed to view, regardless of weather conditions, to ensure that mortar color is consistent.

B. Preblended, Dry Mortar Mix: Furnish dry mortar ingredients in form of a preblended mix. Measure quantities by weight to ensure accurate proportions, and thoroughly blend ingredients before delivering to Project site.

PART 3 - EXECUTION

3.01 INSTALLATION, GENERAL

A. Thickness: Build cavity and composite walls and other masonry construction to full thickness shown. Build single-wythe walls to actual widths of masonry units, using units of widths indicated.

B. Build chases and recesses to accommodate items specified in this and other Sections.

C. Leave openings for equipment to be installed before completing masonry. After installing equipment, complete masonry to match the construction immediately adjacent to opening.

D. Use full-size units without cutting if possible. If cutting is required to provide a continuous pattern or to fit adjoining construction, cut units with motor-driven saws; provide clean, sharp, unchipped edges. Allow

units to dry before laying unless wetting of units is specified. Install cut units with cut surfaces and, where possible, cut edges concealed.

E. Select and arrange units for exposed unit masonry to produce a uniform blend of colors and textures.

1. Mix units from several pallets or cubes as they are placed.

F. Matching Existing Masonry: Match coursing, bonding, color, and texture of existing masonry.

G. Wetting of Brick: Wet brick before laying if initial rate of absorption exceeds 30 g/30 sq. in. per minute when tested per ASTM C 67. Allow units to absorb water so they are damp but not wet at time of laying.

3.02 TOLERANCES

A. Dimensions and Locations of Elements:

1. For dimensions in cross section or elevation do not vary by more than plus 1/2 inch or minus 1/4 inch.

2. For location of elements in plan do not vary from that indicated by more than plus or minus 1/2 inch.

3. For location of elements in elevation do not vary from that indicated by more than plus or minus 1/4 inch in a story height or 1/2 inch total.

B. Lines and Levels:

1. For bed joints and top surfaces of bearing walls do not vary from level by more than 1/4 inch in 10 feet, or 1/2 inch maximum.

2. For conspicuous horizontal lines, such as lintels, sills, parapets, and reveals, do not vary from level by more than 1/8 inch in 10 feet, 1/4 inch in 20 feet, or 1/2 inch maximum.

3. For vertical lines and surfaces do not vary from plumb by more than 1/4 inch in 10 feet, 3/8 inch in 20 feet, or 1/2 inch maximum.

4. For conspicuous vertical lines, such as external corners, door jambs, reveals, and expansion and control joints, do not vary from plumb by more than 1/8 inch in 10 feet, 1/4 inch in 20 feet, or 1/2 inch maximum.

5. For lines and surfaces do not vary from straight by more than 1/4 inch in 10 feet, 3/8 inch in 20 feet, or 1/2 inch maximum.

6. For vertical alignment of exposed head joints, do not vary from plumb by more than 1/4 inch in 10 feet, or 1/2 inch maximum.

7. For faces of adjacent exposed masonry units, do not vary from flush alignment by more than 1/16 inch except due to warpage of masonry units within tolerances specified for warpage of units.

C. Joints:

1. For bed joints, do not vary from thickness indicated by more than plus or minus 1/8 inch, with a maximum thickness limited to 1/2 inch.

2. For exposed bed joints, do not vary from bed-joint thickness of adjacent courses by more than 1/8 inch.

3. For head and collar joints, do not vary from thickness indicated by more than plus 3/8 inch or minus 1/4 inch.

4. For exposed head joints, do not vary from thickness indicated by more than plus or minus 1/8 inch. Do not vary from adjacent bed-joint and head-joint thicknesses by more than 1/8 inch.

5. For exposed bed joints and head joints of stacked bond, do not vary from a straight line by more than 1/16 inch from one masonry unit to the next.

3.03 LAYING MASONRY WALLS

A. Lay out walls in advance for accurate spacing of surface bond patterns with uniform joint thicknesses and for accurate location of openings, movement-type joints, returns, and offsets. Avoid using less-than-half-size units, particularly at corners, jambs, and, where possible, at other locations.

B. Bond Pattern for Exposed Masonry: Unless otherwise indicated, lay exposed masonry in running bond ; do not use units with less than nominal 4-inch horizontal face dimensions at corners or jambs.

C. Stopping and Resuming Work: Stop work by racking back units in each course from those in course below; do not tooth. When resuming work, clean masonry surfaces that are to receive mortar, remove loose masonry units and mortar, and wet brick if required before laying fresh masonry.

D. Built-in Work: As construction progresses, build in items specified in this and other Sections. Fill in solidly with masonry around built-in items.

3.04 MORTAR BEDDING AND JOINTING

A. Lay hollow brick as follows:

1. With face shells fully bedded in mortar and with head joints of depth equal to bed joints.
2. With entire units, including areas under cells, fully bedded in mortar at starting course on footings.

B. Lay solid masonry units with completely filled bed and head joints; butter ends with sufficient mortar to fill head joints and shove into place. Do not deeply furrow bed joints or slush head joints.

C. Tool exposed joints slightly concave when thumbprint hard, using a jointer larger than joint thickness unless otherwise indicated.

3.05 ANCHORING MASONRY VENEERS

A. Anchor masonry veneers to wall framing with masonry-veneer anchors to comply with the following requirements:

1. Fasten screw-attached anchors through sheathing to wall framing with metal fasteners of type indicated. Use two fasteners unless anchor design only uses one fastener.
2. Insert slip-in anchors in metal studs as sheathing is installed. Provide one anchor at each stud in each horizontal joint between sheathing boards.
3. Embed tie sections in masonry joints. Provide not less than 2 inches of air space between back of masonry veneer and face of sheathing or as indicated.
4. Locate anchor sections to allow maximum vertical differential movement of ties up and down.
5. Space anchors as indicated, but not more than 16 inches o.c. vertically and 24 inches o.c. horizontally with not less than 1 anchor for each 2.67 sq. ft. of wall area. Install additional anchors within 12 inches of openings and at intervals, not exceeding 36 inches, around perimeter.

3.06 FLASHING, WEEP HOLES, CAVITY DRAINAGE, AND VENTS

A. General: Install embedded flashing and weep holes in masonry at shelf angles, lintels, ledges, other obstructions to downward flow of water in wall, and where indicated.

B. Install flashing as follows unless otherwise indicated:

1. Prepare masonry surfaces so they are smooth and free from projections that could puncture flashing. Where flashing is within mortar joint, place through-wall flashing on sloping bed of mortar and cover with mortar. Before covering with mortar, seal penetrations in flashing with adhesive, sealant, or tape as recommended by flashing manufacturer.
2. At lintels and shelf angles, extend flashing a minimum of 6 inches into masonry at each end. At heads and sills, extend flashing 6 inches at ends and turn up not less than 2 inches to form end dams.
3. Install metal drip edges beneath flexible flashing at exterior face of wall. Stop flexible flashing 1/2 inch back from outside face of wall and adhere flexible flashing to top of metal drip edge.
4. Install metal flashing termination beneath flexible flashing at exterior face of wall. Stop flexible flashing 1/2 inch back from outside face of wall and adhere flexible flashing to top of metal flashing termination.

C. Install weep holes in head joints in exterior wythes of first course of masonry immediately above embedded flashing and as follows:

1. Use open head joints to form weep holes.
2. Space weep holes 32 inches o.c. unless otherwise indicated.

D. Place cavity drainage material in cavities to comply with configuration requirements for cavity drainage material in "Miscellaneous Masonry Accessories" Article.

3.07 REPAIRING, POINTING, AND CLEANING

A. Remove and replace masonry units that are loose, chipped, broken, stained, or otherwise damaged or that do not match adjoining units. Install new units to match adjoining units; install in fresh mortar, pointed to eliminate evidence of replacement.

B. Pointing: During the tooling of joints, enlarge voids and holes, except weep holes, and completely fill with mortar. Point up joints, including corners, openings, and adjacent construction, to provide a neat, uniform appearance. Prepare joints for sealant application, where indicated.

C. In-Progress Cleaning: Clean unit masonry as work progresses by dry brushing to remove mortar fins and smears before tooling joints.

D. Final Cleaning: After mortar is thoroughly set and cured, clean exposed masonry as follows:

1. Test cleaning methods on sample wall panel; leave one-half of panel uncleaned for comparison purposes
2. Protect adjacent surfaces from contact with cleaner.
3. Wet wall surfaces with water before applying cleaners; remove cleaners promptly by rinsing surfaces thoroughly with clear water.
4. Clean brick by bucket-and-brush hand-cleaning method described in "BIA Technical Notes 20,"
5. Clean masonry with a proprietary acidic cleaner applied according to manufacturer's written instructions.
6. Clean concrete masonry by cleaning method indicated in NCMA TEK 8-2A applicable to type of stain on exposed surfaces.

3.08 MASONRY WASTE DISPOSAL

A. Waste Disposal as Fill Material: Dispose of clean masonry waste, including excess or soil-contaminated sand, waste mortar, and broken masonry units, by crushing and mixing with fill material as fill is placed.

1. Crush masonry waste to less than 4 inches in each direction.
2. Do not dispose of masonry waste as fill within 18 inches of finished grade.

B. Excess Masonry Waste: Remove excess clean masonry waste that cannot be used as fill, as described above, and other masonry waste, and legally dispose of off Owner's property.

END OF SECTION

PART 1 - GENERAL

1.01 RELATED DOCUMENTS

A. Drawings and general provisions of Contract, including General and Supplementary Conditions and Division 1 Specification sections, apply to work of this section.

1.02 WORK INCLUDED

A. Concrete masonry units.

B. Reinforcing, anchors, and accessories.

1.03 WORK INSTALLED BUT FURNISHED UNDER OTHER SECTIONS

A. Section 05 50 00 - Metal Fabrications: Loose steel lintels.

B. Section 07 21 00 - Thermal Insulation.

C. Section 07 65 23 - Rubber Sheet Flashing.

1.04 RELATED WORK

A. Section 03 20 00 - Concrete Reinforcing.

B. Section 04 05 11 - Masonry Mortaring and Grouting.

C. Section 04 21 13 - Brick Masonry.

D. Section 06 10 00 - Rough Carpentry: Centering and shoring.

E. Section 07 92 00 - Joint Sealants: Sealant for masonry control and expansion joints.

F. Section 09 29 00 - Gypsum Board

1.05 REFERENCES

(Current Edition at Date of Bid)

A. ACI 530 - Building Code Requirements for Masonry Structures.

B. ACI 530.1 - Specifications for Masonry Structures.

C. ASTM A82 - Cold Drawn Steel Wire for Concrete Reinforcing.

D. ASTM A123 - Zinc Coatings on Iron and Steel Products.

E. ASTM A951 - Standard specification for masonry joint reinforcing.

F. ASTM C55 - Concrete brick.

G. ASTM C90 - Load-bearing concrete masonry units.

H. ASTM C126 - Glazed concrete masonry units.

I. ASTM C129 - Non-load-bearing concrete masonry units.

J. ASTM C744 - Prefaced concrete units.

K. ASTM C780 - Method for Construction Evaluation of Mortars.

L. ASTM E514 - Test Method for Water Permeance of Concrete Masonry.

1.06 SUBMITTALS

A. Submit in accordance with Section 01 33 00 Submittals Procedures.

B. Submit manufacturer’s product data for each type of concrete unit masonry, concrete unit masonry accessories, and other manufactured products, including certifications that each type complies with specified requirements.

C. Statement of Compressive Strength of Masonry: For each combination of masonry unit type and mortar type, provide statement of average net-area compressive strength of masonry units, mortar type, and resulting net-area compressive strength of masonry determined according to TMS 602/ACI 530.1/ASCE 6.

D. Cold-Weather and Hot-Weather Procedures: Detailed description of methods, materials, and equipment to be used to comply with requirements.

E. Samples for initial selection of ground face masonry units from manufacturer's standard colors.

F. Full-size units as samples for verification of ground face masonry units selected.

G. Material certificates for ground face units, signed by manufacturer, certifying that ground face units comply with the requirements.

H. Submit manufacturer's product literature for each ground face color selected.

I. Material test reports from a qualified independent testing agency, indicating and interpreting test results relative to compliance of ground face units with requirements indicated.

J. Qualification data for manufacturer of ground face units specified in the "Quality Assurance" Article to demonstrate their capabilities and experience. Include lists of completed projects with project names and addresses, names and addresses of architects and owners.

K. Submit 1 sample of all accessories and anchors.

1.07 QUALITY ASSURANCE

A. Perform work in accordance with ACI 530 and ACI 530.1.

B. Maintain one copy of documents on site.

C. Testing as per Section 01 45 33 - Required Special Inspections and Procedures.

D. Manufacturer Qualifications: The ground face concrete masonry manufacturer shall have a minimum of five years experience manufacturing and grinding ground face CMU at their current facility.

E. Preconstruction Testing: Employ and pay a qualified independent testing agency to test ground face units for strength, absorption, and moisture content per ASTM C140.

F. Single-Source Responsibility: Obtain ground face concrete masonry units from one source and by a single manufacturer for each color required.

G. All ground face concrete masonry units shall be factory-ground. Units not ground in the factory will not be acceptable.

H. Ground face concrete masonry units shall specifically conform to paragraph 7.3.1 of ASTM C90 with regard to imperfections (chips and cracks).

1.08 QUALIFICATIONS

A. Manufacturer: Company specializing in manufacturing the products specified with minimum 3 years experience.

B. Installer: Minimum 5 years documented experience.

1.09 DELIVERY, STORAGE AND HANDLING OF MATERIALS

A. Deliver, store and handle materials to prevent inclusion of foreign materials and damage by water or weather. Store packaged materials in their original packages. Damaged or deteriorated materials shall be removed from the premises.

B. Store cementitious materials on elevated platforms, under cover, and in a dry location. Do not use cementitious materials that have become damp.

C. Store aggregates where grading and other required characteristics can be maintained and contamination avoided.

D. Deliver preblended, dry mortar mix in moisture-resistant containers. Store preblended, dry mortar mix in delivery containers on elevated platforms in a dry location or in covered weatherproof dispensing silos.

E. Store masonry accessories, including metal items, to prevent corrosion and accumulation of dirt and oil.

F. Ground face concrete masonry units shall be delivered to the jobsite banded on wood pallets with protective cardboard between layers of units.

G. Store ground face concrete masonry units on elevated platforms, under waterproof cover, and in a dry location to prevent their deterioration or damage due to moisture, temperature changes, contaminants, corrosion, and other causes. If units become wet, do not install until they are in an air-dried condition.

H. Handle ground face concrete masonry units with extreme care to avoid chippage and breakage.

1.10 FIELD CONDITIONS

A. Protection of Masonry: During construction, cover tops of walls, projections, and sills with waterproof sheeting at end of each day's work. Cover partially completed masonry when construction is not in progress.

1. Extend cover a minimum of 24 inches (600 mm) down both sides of walls, and hold cover securely in place.

B. Do not apply uniform floor or roof loads for at least 12 hours and concentrated loads for at least three days after building masonry walls or columns.

C. Stain Prevention: Prevent grout, mortar, and soil from staining the face of masonry to be left exposed or painted. Immediately remove grout, mortar, and soil that come in contact with such masonry.

1. Protect base of walls from rain-splashed mud and from mortar splatter by spreading coverings on ground and over wall surface.

2. Protect sills, ledges, and projections from mortar droppings.

3. Protect surfaces of window and door frames, as well as similar products with painted and integral finishes, from mortar droppings.

4. Turn scaffold boards near the wall on edge at the end of each day to prevent rain from splashing mortar and dirt onto completed masonry.

D. Cold-Weather Requirements: Do not use frozen materials or materials mixed or coated with ice or frost. Do not build on frozen substrates. Remove and replace unit masonry damaged by frost or by freezing conditions. Comply with cold-weather construction requirements contained in TMS 602/ACI 530.1/ASCE 6.

1. Cold-Weather Cleaning: Use liquid cleaning methods only when air temperature is 40 deg F (4 deg C) and higher and will remain so until masonry has dried, but not less than seven days after completing cleaning.

E. Hot-Weather Requirements: Comply with hot-weather construction requirements contained in TMS 602/ACI 530.1/ASCE 6.

PART 2 - PRODUCTS

2.01 MANUFACTURERS

A. Source Limitations for Masonry Units: Obtain exposed masonry units of a uniform texture and color, or a uniform blend within the ranges accepted for these characteristics, from single source from single manufacturer for each product required.

2.02 PERFORMANCE REQUIREMENTS

A. Provide structural unit masonry that develops indicated net-area compressive strengths at 28 days.

1. Determine net-area compressive strength of masonry from average net-area compressive strengths of masonry units and mortar types (unit-strength method) according to TMS 602/ACI 530.1/ASCE 6.

2. Determine net-area compressive strength of masonry by testing masonry prisms according to ASTM C 1314.

2.03 UNIT MASONRY, GENERAL

A. Masonry Standard: Comply with TMS 602/ACI 530.1/ASCE 6 except as modified by requirements in the Contract Documents.

B. Defective Units: Referenced masonry unit standards may allow a certain percentage of units to contain chips, cracks, or other defects exceeding limits stated. Do not use units where such defects are exposed in the completed Work and will be within 20 feet (6 m) vertically and horizontally of a walking surface.

C. Fire-Resistance Ratings: Comply with requirements for fire-resistance-rated assembly designs indicated.

1. Where fire-resistance-rated construction is indicated, units shall be listed and labeled by a qualified testing agency acceptable to authorities having jurisdiction.

2.04 CONCRETE MASONRY UNITS

A. Shapes:

1 Manufacturer's standard units with nominal face dimensions of 16 inches long x 8 inches high x thickness indicated or as required or indicated on drawings. Manufactured to dimensions 3/8 inch (10 mm) less-than-nominal dimensions.

2. Exposed Faces: Manufacturer's standard color and texture selected by Architect or select to match of adjacent existing units unless otherwise indicated.

3. Special Shapes: Provide where required for lintels, corners, jambs, sash, control joint headers, bonding, starter blocks, and other special conditions. Bull nose corner units shall be used at all exposed corners and jambs. Knockout blocks with open bottom shall not accepted at the course of lintels and bond beams right above openings.

B. Concrete Masonry Units:

1. Provide units complying with characteristics indicated below for face size, exposed face and, under each form of block included, for weight classification:

a. All concrete masonry units: ASTM C90 hollow units.

b. Unit Compressive Strength: Provide units with minimum average net-area compressive strength of 2150 psi (14.8 MPa).

c. Density Classification: Normal weight.

d. Faces to Receive Plaster: Where units are indicated to receive a direct application of plaster, provide textured-face units made with gap-graded aggregates.

2.05 MASONRY LINTELS

A. Masonry Lintels: Prefabricated or built-in-place masonry lintels made from bond beam CMUs matching adjacent CMUs in color, texture, and density classification, with reinforcing bars placed as indicated and filled with coarse grout. Cure precast lintels before handling and installing. Temporarily support built-in-place lintels until cured.

2.06 REINFORCING, ANCHORS AND ACCESSORIES

A. Acceptable Manufacturers:

1. Manufacturers: Subject to compliance with requirements, provide products by one of the following:
   a. Dur-O-Wal; a Hohmann & Barnard company.
   b. Heckmann Building Products, Inc.
   c. Hohmann & Barnard, Inc.
   d. Wire-Bond.
   e. FERO Corporation.
2. Substitutions: Under provisions of Section 01 25 00.

B. General: Ties and anchors shall extend at least 1-1/2 inches (38 mm) into masonry but with at least a 5/8-inch (16-mm) cover on outside face.

C. Materials: Provide materials that comply with the following unless otherwise indicated:

1. Hot-Dip Galvanized, Carbon-Steel Wire: ASTM A 82/A 82M; with ASTM A 153/A 153M, Class B-2 coating.
2. Steel Sheet, Galvanized after Fabrication: ASTM A 1008/A 1008M, Commercial Steel, with ASTM A 153/A 153M, Class B coating.
3. Stainless-Steel Sheet: ASTM A 666, Type 304
4. Steel Plates, Shapes, and Bars: ASTM A 36/A 36M.
5. Stainless-Steel Bars: ASTM A 276 or ASTM a 666, Type 304.
6. Reinforcing Steel: Type specified in Section 03 20 00; sizes as indicated on drawings.

D. Horizontal Joint Reinforcing:

1. Wire not lighter than 9 gage.
2. Joint Reinforcing: Shall be ladder type masonry reinforcing with 9 gauge side and cross wires with spacing no more than 16 inches o.c. complying with ASTM A 951/A 951M. Side wire spacing shall allow placement in face shells with 5/8” cover.

E. ACCESSORIES:

1. Control Joints: Preformed rubber material; RS Series conforming to ASTM 2000 2AA-805, size as required.
2. Compressible Filler: Premolded filler strips complying with ASTM D 1056, Grade 2A1; compressible up to 35 percent; formulated from neoprene.
3. Bond-Breaker Strips: Unless otherwise indicated, use asphalt-saturated, organic roofing felt complying with ASTM D 226, Type I (No. 15 asphalt felt).
4. Flashing: As per Section 07 65 23.
5. Other accessories as may be required for work of this section.

PART 3 - EXECUTION

3.01 EXAMINATION

A. Examine conditions, with Installer present, for compliance with requirements for installation tolerances and other conditions affecting performance of the Work.

1. For the record, prepare written report, endorsed by Installer, listing conditions detrimental to performance of work.
2. Verify that foundations are within tolerances specified.
3. Verify that reinforcing dowels are properly placed.

B. Before installation, examine rough-in and built-in construction for piping systems to verify actual locations

of piping connections.

C. Proceed with installation only after unsatisfactory conditions have been corrected.

3.02 INSTALLATION, GENERAL

A. Thickness: Build cavity and composite walls and other masonry construction to full thickness shown. Build single-wythe walls to actual widths of masonry units, using units of widths indicated.

B. Build chases and recesses to accommodate items specified in this and other Sections.

C. Leave openings for equipment to be installed before completing masonry. After installing equipment, complete masonry to match the construction immediately adjacent to opening.

D. Use full-size units without cutting if possible. If cutting is required to provide a continuous pattern or to fit adjoining construction, cut units with motor-driven saws; provide clean, sharp, unchipped edges. Allow units to dry before laying unless wetting of units is specified. Install cut units with cut surfaces and, where possible, cut edges concealed.

E. Select and arrange units for exposed unit masonry to produce a uniform blend of colors and textures.

1. Mix units from several pallets or cubes as they are placed.

F. Matching Existing Masonry: Match coursing, bonding, color, and texture of existing masonry.

3.03 TOLERANCES

A. Dimensions and Locations of Elements:

1. For dimensions in cross section or elevation do not vary by more than plus 1/2 inch (12 mm) or minus 1/4 inch (6 mm).

2. For location of elements in plan do not vary from that indicated by more than plus or minus 1/2 inch (12 mm).

3. For location of elements in elevation do not vary from that indicated by more than plus or minus 1/4 inch (6 mm) in a story height or 1/2 inch (12 mm) total.

B. Lines and Levels:

1. For bed joints and top surfaces of bearing walls do not vary from level by more than 1/4 inch in 10 feet (6 mm in 3 m), or 1/2 inch (12 mm) maximum.

2. For conspicuous horizontal lines, such as lintels, sills, parapets, and reveals, do not vary from level by more than 1/8 inch in 10 feet (3 mm in 3 m), 1/4 inch in 20 feet (6 mm in 6 m), or 1/2 inch (12 mm) maximum.

3. For vertical lines and surfaces do not vary from plumb by more than 1/4 inch in 10 feet (6 mm in 3 m), 3/8 inch in 20 feet (9 mm in 6 m), or 1/2 inch (12 mm) maximum.

4. For conspicuous vertical lines, such as external corners, door jambs, reveals, and expansion and control joints, do not vary from plumb by more than 1/8 inch in 10 feet (3 mm in 3 m), 1/4 inch in 20 feet (6 mm in 6 m), or 1/2 inch (12 mm) maximum.

5. For lines and surfaces do not vary from straight by more than 1/4 inch in 10 feet (6 mm in 3 m), 3/8 inch in 20 feet (9 mm in 6 m), or 1/2 inch (12 mm) maximum.

6. For vertical alignment of exposed head joints, do not vary from plumb by more than 1/4 inch in 10 feet (6 mm in 3 m), or 1/2 inch (12 mm) maximum.

7. For faces of adjacent exposed masonry units, do not vary from flush alignment by more than 1/16 inch (1.5 mm) except due to warpage of masonry units within tolerances specified for warpage of units.

C. Joints:

1. For bed joints, do not vary from thickness indicated by more than plus or minus 1/8 inch (3 mm), with a maximum thickness limited to 1/2 inch (12 mm).

2. For exposed bed joints, do not vary from bed-joint thickness of adjacent courses by more than 1/8 inch (3 mm).

3. For head and collar joints, do not vary from thickness indicated by more than plus 3/8 inch (9 mm) or minus 1/4 inch (6 mm).

4. For exposed head joints, do not vary from thickness indicated by more than plus or minus 1/8 inch (3 mm).

5. For exposed bed joints and head joints of stacked bond, do not vary from a straight line by more than 1/16 inch (1.5 mm) from one masonry unit to the next.

3.04 LAYING MASONRY WALLS

A. Lay out walls in advance for accurate spacing of surface bond patterns with uniform joint thicknesses and

for accurate location of openings, movement-type joints, returns, and offsets. Avoid using less-than-half-size units, particularly at corners, jambs, and, where possible, at other locations.

B. Bond Pattern for Exposed Masonry: Unless otherwise indicated, lay exposed masonry in running bond ; do not use units with less than nominal 4-inch (100-mm) horizontal face dimensions at corners or jambs.

C. Lay concealed masonry with all units in a wythe in running bond or bonded by lapping not less than 2 inches (50 mm). Bond and interlock each course of each wythe at corners. Do not use units with less than nominal 4-inch (100-mm) horizontal face dimensions at corners or jambs.

D. Stopping and Resuming Work: Stop work by racking back units in each course from those in course below; do not tooth. When resuming work, clean masonry surfaces that are to receive mortar, remove loose masonry units and mortar, and wet brick if required before laying fresh masonry.

E. Built-in Work: As construction progresses, build in items specified in this and other Sections. Fill in solidly with masonry around built-in items.

F. Fill space between steel frames and masonry solidly with mortar unless otherwise indicated.

G. Where built-in items are to be embedded in cores of hollow masonry units, place a layer of metal lath, wire mesh, or plastic mesh in the joint below and rod mortar or grout into core.

H. Fill cores in hollow CMUs with grout 24 inches (600 mm) under bearing plates, beams, lintels, posts, and similar items unless otherwise indicated.

I. Build non-load-bearing interior partitions full height of story to underside of solid floor or roof structure above unless otherwise indicated.

1. Install compressible filler in joint between top of partition and underside of structure above.
2. Fasten partition top anchors to structure above and build into top of partition. Grout cells of CMUs solidly around plastic tubes of anchors and push tubes down into grout to provide 1/2-inch (13-mm) clearance between end of anchor rod and end of tube. Space anchors 48 inches (1200 mm) <Insert spacing> o.c. unless otherwise indicated.
3. Wedge non-load-bearing partitions against structure above with small pieces of tile, slate, or metal. Fill joint with mortar after dead-load deflection of structure above approaches final position.
4. At fire-rated partitions, treat joint between top of partition and underside of structure above to comply with Section 078446 "Fire-Resistive Joint Systems."

3.05 MORTAR BEDDING AND JOINTING

A. Lay hollow CMUs as follows:

1. With face shells fully bedded in mortar and with head joints of depth equal to bed joints.
2. With webs fully bedded in mortar in all courses of piers, columns, and pilasters.
3. With webs fully bedded in mortar in grouted masonry, including starting course on footings.
4. With entire units, including areas under cells, fully bedded in mortar at starting course on footings where cells are not grouted.

B. Lay solid masonry units with completely filled bed and head joints; butter ends with sufficient mortar to fill head joints and shove into place. Do not deeply furrow bed joints or slush head joints.

C. Lay structural-clay tile as follows:

1. Lay vertical-cell units with full head joints unless otherwise indicated. Provide bed joints with full mortar coverage on face shells and webs.
2. Lay horizontal-cell units with full bed joints unless otherwise indicated. Keep drainage channels, if any, free of mortar. Form head joints with sufficient mortar so excess will be squeezed out as units are placed in position. Butter both sides of units to be placed, or butter one side of unit already in place and one side of unit to be placed.
3. Maintain joint thicknesses indicated except for minor variations required to maintain bond alignment. If not indicated, lay walls with 1/4- to 3/8-inch- (6- to 10-mm-) thick joints.
4. Where epoxy-mortar pointed joints are indicated, rake out setting mortar to a uniform depth of 1/4 inch (6 mm) and point with epoxy mortar to comply with epoxy-mortar manufacturer's written instructions.

D. Set firebox brick in full bed of refractory mortar with full head joints. Form joints by buttering both surfaces of adjoining brick and sliding it into place. Make joints just wide enough to accommodate variations in size of brick, approximately 1/8 inch (3 mm). Tool joints smooth on surfaces exposed to fire or smoke.

E. Install clay flue liners to comply with ASTM C 1283. Install flue liners ahead of surrounding masonry. Set

clay flue liners in full bed of refractory mortar 1/16 to 1/8 inch (1.6 to 3 mm) thick. Strike joints flush on inside of flue to provide smooth surface. Maintain expansion space between flue liner and surrounding masonry except where surrounding masonry is required to provide lateral support for flue liners.

F. Set cast-stone trim units in full bed of mortar with full vertical joints. Fill dowel, anchor, and similar holes.

1. Clean soiled surfaces with fiber brush and soap powder and rinse thoroughly with clear water.
2. Allow cleaned surfaces to dry before setting.
3. Wet joint surfaces thoroughly before applying mortar.

G. Tool exposed joints slightly concave when thumbprint hard, using a jointer larger than joint thickness unless otherwise indicated.

1. For glazed masonry units, use a nonmetallic jointer 3/4 inch (19 mm) or more in width.

H. Cut joints flush for masonry walls to receive plaster or other direct-applied finishes (other than paint) unless otherwise indicated.

3.06 MASONRY JOINT REINFORCEMENT

A. General: Install entire length of longitudinal side rods in mortar with a minimum cover of 5/8 inch (16 mm) on exterior side of walls, 1/2 inch (13 mm) elsewhere. Lap reinforcement a minimum of 6 inches (150 mm).

1. Space reinforcement not more than 16 inches (406 mm) o.c.
2. Space reinforcement not more than 8 inches (203 mm) o.c. in foundation walls and parapet walls.
3. Provide reinforcement not more than 8 inches (203 mm) above and below wall openings and extending 12 inches (305 mm) beyond openings in addition to continuous reinforcement.

B. Interrupt joint reinforcement at control and expansion joints unless otherwise indicated.

C. Provide continuity at wall intersections by using prefabricated T-shaped units.

D. Provide continuity at corners by using prefabricated L-shaped units.

E. Cut and bend reinforcing units as directed by manufacturer for continuity at[corners,] returns, offsets, column fireproofing, pipe enclosures, and other special conditions.

3.07 ANCHORING MASONRY TO STRUCTURAL STEEL AND CONCRETE

A. Anchor masonry to structural steel and concrete where masonry abuts or faces structural steel or concrete to comply with the following:

1. Provide an open space not less than 1/2 inch (13 mm) wide between masonry and structural steel or concrete unless otherwise indicated. Keep open space free of mortar and other rigid materials.
2. Anchor masonry with anchors embedded in masonry joints and attached to structure.
3. Space anchors as indicated, but not more than 24 inches (610 mm) o.c. vertically and 36 inches (915 mm) o.c. horizontally.

3.08 CONTROL AND EXPANSION JOINTS

A. General: Install control and expansion joint materials in unit masonry as masonry progresses. Do not allow materials to span control and expansion joints without provision to allow for in-plane wall or partition movement.

B. Form control joints in concrete masonry [as follows] [using one of the following methods]:

1. Fit bond-breaker strips into hollow contour in ends of CMUs on one side of control joint. Fill resultant core with grout and rake out joints in exposed faces for application of sealant.
2. Install preformed control-joint gaskets designed to fit standard sash block.
3. Install interlocking units designed for control joints. Install bond-breaker strips at joint. Keep head joints free and clear of mortar or rake out joint for application of sealant.
4. Install temporary foam-plastic filler in head joints and remove filler when unit masonry is complete for application of sealant.

C. Provide horizontal, pressure-relieving joints by either leaving an air space or inserting a compressible filler of width required for installing sealant and backer rod specified in Section 079200 "Joint Sealants," but not less than 3/8 inch (10 mm).

1. Locate horizontal, pressure-relieving joints beneath shelf angles supporting masonry.

3.09 REINFORCED MASONRY BOND BEAMS AND LINTELS

A. Provide concrete masonry unit lintels and tie beams in the locations indicated and over openings more

than 15 inches wide where no lintels are indicated. This includes openings for ducts and similar items.

B. All exposed lintels, except precast units, shall have joints to match the pattern of the adjacent masonry.

C. Form lintels and bond beams of concrete masonry trough units; reinforced as shown and fill with grout. Care shall be exercised in casting lintels and bond beams to insure complete filling of cells and true alignment with uniform mortar joints on exposed faces.

3.10 OPENINGS AND HOLES

A. Provide all openings and holes in masonry work. Provide all chases and recesses in masonry work of all types as indicated on the drawings and as required for pipes, ducts, and other work of Mechanical and Electrical Contractors. Such work shall be accurately located by the Contractor requiring the work, but masonry work shall not be constructed without giving other Contractors due notice and opportunity to lay out or install such items as may be required for their work.

B. Where required for installation of work of other Contractors, leave openings as indicated on the drawing or as required to receive a later installation.

C. After work of other Contractors is in place, openings shall be neatly filled with masonry of the same type as in the adjoining surfaces.

3.11 SETTING AND BUILDING-IN

A. Build-in materials occurring in any type of masonry construction which are furnished by other Contractors. All build-in work shall be accurately placed, secured, held in position, and located by the Contractor requiring the work.

B. Set and build-in items of miscellaneous iron such as loose lintels and anchors required to complete all parts not connected to steel.

C. Set all anchor bolts required for the attachment of work to masonry.

D. Build-in recesses, flashings, slots, anchors, reinforcing, sleeves and other work required by the drawings.

3.12 PROTECTION

A. At the end of each days work, cover the tops of walls with canvas or other suitable material weighted down to exclude weather.

3.13 REPAIR, POINTING AND CLEANING

A. Remove and replace masonry units which are loose, chipped, broken, stained or otherwise damaged, or if units do not match adjoining units as compared to sample panel or wall panel designated as basis of acceptance. Provide new units to match adjoining units and set in fresh mortar, pointed to match adjacent joints.

B. Pointing: During the tooling of joints, enlarge any voids or holes and completely fill with mortar. Point-up joints at openings and adjacent work to provide a neat, uniform appearance, properly prepared for application of sealant, where it occurs.

C. Clean concrete unit masonry to in accordance with masonry manufacturer's recommendations and applicable NCMA "Tek" bulletins.

END OF SECTION

PART 1 - GENERAL

1.01 RELATED DOCUMENTS

A. Drawings and general provisions of the Contract, including General and Supplementary Conditions and Division 01 Specification Sections, apply to this Section.

1.02 SUMMARY

A. Section Includes:

1. Structural steel.
2. Miscellaneous angles and plates.
3. Bolts and anchor rods.
4. Steel assemblies to be embedded in concrete or masonry.
5. Shear stud connectors.
6. Supplementary parts and members necessary to complete and erect structural steel frame.
7. Shop painting.
8. Grout.

B. Related Sections:

1. Section 01 25 00 - Submittal Procedures
2. Section 01 40 00 - Quality Requirements
3. Section 05 21 00 - Steel Joist Framing
4. Section 05 31 00 - Steel Decking
5. Section 05 50 00 - Metal Fabrications
6. Section 05 51 00 - Metal Stairs
7. Section 09 91 00 - Painting

1.03 DEFINITIONS

A. Structural Steel: Elements of structural-steel frame, as classified by AISC 303, "Code of Standard Practice for Steel Buildings and Bridges."

1.04 PERFORMANCE REQUIREMENTS

A. Connections: Provide details of simple shear, axial and moment connections required by the Contract Documents to be selected or completed by structural-steel fabricator, including comprehensive engineering analysis by a qualified professional engineer, to withstand ASD loads indicated and comply with other information and restrictions indicated.

1. Select and complete connections using schematic details indicated and AISC's "Steel Construction Manual, 14th Edition".

B. Detail bolted connections using bolts conforming to ASTM A325N, Bearing Type Connections with threads allowed in shear plane, unless noted otherwise on Contract Drawings.

1. Select and complete connections using schematic details indicated and AISC's "Steel Construction Manual, 14 Edition".

1.05 SUBMITTALS

A. Product Data: For each type of product indicated.

B. Shop Drawings: Show fabrication of structural-steel components.

1. Submit three bond sets of shop drawings and calculations for review by the Structural Engineer-of-Record. The Structural Engineer-of-Record will mark three sets with red and will return one set to the contractor through the Architect. The contractor shall make the number of photocopies required of the approved shop drawings for distribution to other parties, and the contractor shall be responsible for transmitting the original red-marked set to the fabricator for corrections.
2. Include details of cuts, connections, splices, camber, holes, and other pertinent data.
3. Include embedment drawings.
4. Indicate welds by standard AWS symbols, distinguishing between shop and field welds, and show size, length, and type of each weld. Show backing bars that are to be removed and supplemental

fillet welds where backing bars are to remain.

5. Indicate type, size, and length of bolts, distinguishing between shop and field bolts. Identify pretensioned and slip-critical high-strength bolted connections.
6. Do not begin fabrication of materials prior to review of shop drawings.
7. Review of shop drawings is for member sizes, spacings, details, and general compliance with the Contract Drawings only.
8. Material quantities, lengths, fit, verification of job conditions and coordination with other trades are responsibility of Contractor.
9. Reproductions of Contract Drawings shall not be used for shop drawings.
10. For structural-steel connections indicated to comply with design loads, include structural analysis data and design calculations prepared by and signed and sealed by the qualified professional engineer responsible for their preparation and licensed in the state where the project is located.

C. Qualification Data: For qualified installer and fabricator.

D. Welding certificates.

E. Mill test reports for structural steel, including chemical and physical properties.

F. Product Test Reports; For the following:

1. Bolts, nuts, and washers including mechanical properties and chemical analysis.
2. Direct-tension indicators.
3. Tension-control, high-strength bolt-nut-washer assemblies.
4. Shear stud connectors.
5. Shop primers.
6. Nonshrink grout.

1.06 QUALITY ASSURANCE

A. Fabricator Qualifications: A qualified fabricator that participates in the AISC Quality Certification Program and model AISC standards of Practice. Not less than 5 years of experience in fabrication of structural steel.

B Installer Qualifications: A qualified installer who participates in the AlSC Quality Certification Program and is model AISC standards of Practice. Not less than 5 years of experience in installation of structural steel.

C. Welding Qualifications: Qualify procedures and personnel according to AWS D1.1, "Structural Welding Code - Steel."

D. Comply with applicable provisions of the following specifications and documents:

1. AISC 303.
2. ABC 360.
3. RCSC's "Specification for Structural Joints Using ASTM A325 or A490 Bolts."

E Preinstallation Conference: Conduct conference at Project site.

1.07 DELIVERY, STORAGE, AND HANDLING

A. Store materials to permit easy access for inspection and identification. Keep steel members off ground and spaced by using pallets, dunnage, or other supports and spacers. Protect steel members and packaged materials from corrosion and deterioration.

1. Do not store materials on structure in a manner that might cause distortion, damage, or overload to members or supporting structures. Repair or replace damaged materials or structures as directed.

B. Store fasteners in a protected place in sealed containers with manufacturer's labels intact.

1. Fasteners may be repackaged provided Owner's testing and inspecting agency observes repackaging and seals containers.
2. Clean and relubricate bolts and nuts that become dry or rusty before use.
3. Comply with manufacturers' written recommendations for cleaning and lubricating ASTM F 1852 fasteners and for retesting fasteners after lubrication.

1.08 COORDINATION

A. Coordinate selection of shop primers with topcoats to be applied over them. Comply with paint and coating manufacturers' recommendations to ensure that shop primers and topcoats are compatible with one another.

B. Coordinate installation of anchorage items to be embedded in or attached to other construction without

delaying the Work. Provide setting diagrams, sheet metal templates, instructions, and directions for installation.

PART 2 - PRODUCTS

2.01 STRUCTURAL-STEEL MATERIALS

A. W-Shapes: ASTM A992.

B. Channels, Angles, M-Shapes and S-Shapes: ASTM A36.

C. Plate and Bar: ASTM A36.

D. Cold-Formed Hollow Structural Sections: ASTM A500, Grade B structural tubing.

E. Steel Pipe: ASTM A53, Type E or S, Grade B.

1. Finish: Black except where indicated to be galvanized.

F. Steel Castings: ASTM A216, Grade WCB with supplementary requirement S11.

G. Steel Forgings: ASTM A668.

H. Welding Electrodes: 70 ksi low-hydrogen.

2.02 BOLTS, CONNECTORS, AND ANCHORS

A. High-Strength Bolts, Nuts, and Washers: ASTM A325, Type 1, heavy-hex steel structural bolts; ASTM A563, Grade C, heavy-hex carbon-steel nuts; and ASTM F436, Type 1, hardened carbon-steel washers; all with plain finish.

1. Direct-Tension Indicators: ASTM F959, Type 325, compressible-washer type with plain finish.

B. Tension-Control, High-Strength Bolt-Nut-Washer Assemblies: ASTM F1852, Type 1, round head assemblies consisting of steel structural bolts with splined ends, ASTM A563 heavy-hex carbon-steel nuts, and ASTM A436 hardened carbon-steel washers.

C. Shear Stud Connectors:

1. Provide shear stud connectors with proper ferrules and accessories especially designed to create composite deck action by mating of shear connectors, concrete deck and supporting beam, and capable of providing shear forces shown on Contract Drawings when welded through deck used on the project.

2. Comply with ASTM A108, Grades C1010-1020, with minimum tensile strength of 60,000 psi.

3. Diameter: Uniform as indicated on Contract Drawings.

4. Head: Concentric with and normal to shaft.

5. Weld Ends: Chamfered and solid flux.

6. Height: At least 1-1/2 inch above top of deck after installation, with at least 3/4 inch clear concrete cover above top of stud, unless noted otherwise on Contract Drawings.

D. Unheaded Anchor Rods: ASTM F1554, Grade 36.

1. Configuration: Straight.

2. Nuts: ASTM A563 heavy-hex carbon steel.

3. Plate Washers: ASTM A36 carbon steel.

4. Washers: ASTM F436, Type 1, hardened carbon steel.

5. Finish: Plain, except where indicated to be galvanized.

E. Threaded Rods: ASTM A36.

1. Nuts: ASTM A563 heavy-hex carbon steel.

2. Washers: ASTM F436, Type 1, hardened carbon steel.

3. Finish: Plain, except where indicated to be galvanized.

F. Clevises and Turnbuckles: Made from cold-finished carbon steel bars, ASTM A108, Grade 1035.

G. Eye Bolts and Nuts: Made from cold-finished carbon steel bars, ASTM A108, Grade 1030.

H. Sleeve Nuts: Made from cold-finished carbon steel bars, ASTM A108, Grade 1018.

I. Headed Stud Anchors for Embedded Assemblies:

1. Steel shall conform to ASTM A108 grades C1010-1020, minimum tensile strength of 60,000 psi.

2. Studs shall be of uniform diameter, heads concentric and normal to shaft, and weld end chamfered and solid flux.

2.03 PRIMER

A. Primer: Fabricator's standard lead- and chromate-free, nonasphaltic, rust-inhibiting primer complying with MPI#79 and compatible with topcoat, unless noted otherwise in Division 09 painting Sections.

B. Galvanizing Repair Paint: ASTM A780.

2.04 GROUT

A. Compressive strength in 28 days: 5000 psi minimum but not less than specified strength of base concrete. Non-oxidizing, if grout will be permanently exposed to view.

1. Nonmetallic, Shrinkage-Resistant Grout: ASTM C1107, factory-packaged, nonmetallic aggregate grout, noncorrosive and nonstaining, mixed with water to consistency suitable for application and a 30-minute working time.

2. Products: Subject to compliance with requirements, available products that may be incorporated into the Work include, but are not limited to, the following:

a. Sonogrout 10K, manufactured by Sonneborn/ChemRex, Inc.

b. Masterflow 713, manufactured by Master Builders Co.

c. Supreme Grout, manufactured by Gifford Hill Co.

2.05 FABRICATION

A. Structural Steel: Fabricate and assemble in shop to greatest extent possible. Fabricate according to AISC's "Code of Standard Practice for Steel Buildings and Bridges" and AISC 360.

1. Camber structural-steel members where indicated.

2. Fabricate beams with rolling camber up.

3. Identify high-strength structural steel according to ASTM A6 and maintain markings until structural steel has been erected.

4. Mark and match-mark materials for field assembly.

5. Complete structural-steel assemblies, including welding of units, before starting shop-priming operations.

B. Steel Bearing Plates: Fabricate steel bearing plates with headed stud anchors of sizes and thicknesses indicated on Contract Drawings.

C. Headed Stud Anchors:

1. Comply with AWS D1.1, Section 7.

2. Clean surfaces to be welded of rust, oil, grease, paint and dirt. Remove mill scale by scraping or sandblasting.

3. Weld headed studs with appropriate equipment properly adjusted for climatic conditions.

4. Remove ceramic ferrules after welding.

D. Thermal Cutting: Perform thermal cutting by machine to greatest extent possible.

1. Plane thermally cut edges to be welded to comply with requirements in AWS D1.1.

E. Bolt Holes: Cut, drill, mechanically thermal cut, or punch standard bolt holes perpendicular to metal surfaces. Short-slotted holes shall not be used for primary frame connections (members connecting to columns), trusses and wind bracing unless specifically allowed by the Engineer of Record. Where used, short slotted holes shall be oriented normal to the direction of load.

F. Finishing: Accurately finish ends of columns and other members transmitting bearing loads.

G. Cleaning: Clean and prepare steel surfaces that are to remain unpainted according to SSPC SP 3, "Power Tool Cleaning."

H. Shear Connectors: Do not paint steel surfaces that receive welded shear connectors. Use automatic end welding of headed-stud shear connectors according to AWS D1.1 and manufacturer's written instructions.

I. Steel Wall-Opening Framing: Select true and straight members for fabricating steel wall opening framing to be attached to structural steel. Straighten as required to provide uniform, square, and true members in completed wall framing.

J. Welded Door Frames: Build up welded door frames attached to structural steel. Weld exposed joints continuously and grind smooth. Plug-weld fixed steel bar stops to frames. Secure removable stops to frames with countersunk machine screws, uniformly spaced not more than 10 inches o.c. unless otherwise indicated.

K. Holes: Provide holes required for securing other work to structural steel and for other work to pass through steel framing members.

1. Cut, drill, or punch holes perpendicular to steel surfaces. Do not thermally cut bolt holes or enlarge holes by burning.
2. Baseplate Holes: Cut, drill, mechanically thermal cut, or punch holes perpendicular to steel surfaces. Holes for anchor rods in base plates may be oversized in accordance with AISC Specifications. Provide washers as indicated on Contract Drawings.
3. Weld threaded nuts to framing and other specialty items indicated to receive other work.

2.06 SHOP CONNECTIONS

A. High-Strength Bolts: Shop install high-strength bolts according to RCSC's "Specification for Structural Joints Using ASTM A325 or A490 Bolts" for type of bolt and type of joint specified.
1. Joint Type: Snug tightened, unless indicated otherwise on Contract Documents.
a. High Strength bolts for bearing connections shall be tightened in accordance with RCSC Specifications to a snug-tight condition. Provide hardened washers as required by the RCSC specification.

B. Weld Connections: Comply with AWS D1.1 for tolerances, appearances, welding procedure specifications, weld quality, and methods used in correcting welding work.
1. Remove backing bars or runoff tabs, back gouge, and grind steel smooth.
2. Assemble and weld built-up sections by methods that will maintain true alignment of axes without exceeding tolerances in AISC 303 for mill material.

2.07 SHOP PRIMING

A. Shop prime steel surfaces except the following:
1. Surfaces embedded in concrete or mortar. Extend priming of partially embedded members to a depth of 2 inches.
2. Surfaces to be field welded.
3. Surfaces to be high-strength bolted with slip-critical connections.
4. Surfaces to receive sprayed fire-resistive materials (applied fireproofing).
5. Galvanized surfaces.
6. Top flanges of beams with shear connectors to support metal deck.

B. Surface Preparation: Clean surfaces to be painted. Remove loose rust and mill scale and spatter, slag, or flux deposits. Prepare surfaces according to the following specifications and standards:
1. SSPC-SP 3, "Power Tool Cleaning."

C. Priming: Immediately after surface preparation, apply primer according to manufacturer's written instructions and at rate recommended by SSPC to provide a minimum dry film thickness of 1.5 mils. Use priming methods that result in full coverage of joints, corners, edges, and exposed surfaces.
1. Stripe paint corners, crevices, bolts, welds, and sharp edges.
2. Apply two coats of shop paint to surfaces that are inaccessible after assembly or erection. Change color of second coat to distinguish it from first.

D. Prepare faying surfaces of slip critical connections in accordance with RCSC.

2.08 GALVANIZING

A. Hot-Dip Galvanized Finish: Apply zinc coating by the hot-dip process to structural steel according to ASTM A123.
1. Fill vent and drain holes that will be exposed in the finished Work unless they will function as weep holes, by plugging with zinc solder and filing off smooth.
2. Galvanize with a minimum G60 coating lintels, shelf angles, plates and welded door frames attached to structural-steel frame and located in exterior walls.

2.09 SOURCE QUALITY CONTROL

A. Testing Agency: Owner will engage an independent testing and inspecting agency to perform shop tests and inspections and prepare test reports.
1. Provide testing agency with access to places where structural-steel work is being fabricated or produced to perform tests and inspections.

B. Correct deficiencies in Work that test reports and inspections indicate does not comply with the Contract Documents at no additional cost to owner.

C. Bolted Connections: Shop-bolted connections will be tested and inspected according to RCSC's "Specification for Structural Joints Using ASTM A325 or A490 Bolts."

D. Welded Connections: Visually inspect shop welds. In addition to visual inspection, complete penetration shop-welded connections will be tested and inspected according to AWS D1.1 and the following inspection procedures, at testing agency's option:

1. Liquid Penetrant Inspection: ASTM E165.
2. Magnetic Particle Inspection: ASTM E709; performed on root pass and on finished weld. Cracks or zones of incomplete fusion or penetration will not be accepted.
3. Ultrasonic Inspection: ASTM E164.
4. Radiographic Inspection: ASTM E94.

E. In addition to visual inspection, shop-welded shear connectors will be tested and inspected according to requirements in AWS D1.1 for stud welding and as follows:

1. Bend tests will be performed if visual inspections reveal either a less-than-continuous 360-degree flash or welding repairs to any shear connector.

2. Tests will be conducted on additional shear connectors if weld fracture occurs on shear connectors already tested, according to requirements in AWS D1.1.

PART 3 - EXECUTION

3.01 EXAMINATION

A. Verify, with steel Erector present, elevations of concrete- and masonry-bearing surfaces and locations of anchor rods, bearing plates, and other embedments for compliance with requirements.

1. Prepare a certified survey of bearing surfaces, anchor rods, bearing plates, and other embedments showing dimensions, locations, angles, and elevations.

B. Proceed with installation only after unsatisfactory conditions have been corrected.

3.02 PREPARATION

A. Provide temporary shores, guys, braces, and other supports during erection to keep structural steel secure, plumb, and in alignment against temporary construction loads and loads equal in intensity to design loads. Remove temporary supports when permanent structural steel, connections, and bracing are in place unless otherwise indicated.

1. Do not remove temporary shoring supporting composite deck construction until cast-in-place concrete has attained its design compressive strength.

3.03 ERECTION

A. Set structural steel accurately in locations and to elevations indicated and according to AISC 303 and AISC 360.

B. Base, Bearing, and Leveling Plates: Clean concrete- and masonry-bearing surfaces of bond reducing materials, and roughen surfaces prior to setting plates. Clean bottom surface of plates.

1. Set plates for structural members on wedges, shims, or setting nuts as required.
2. Weld plate washers to top of baseplate.
3. Snug-tighten anchor rods after supported members have been positioned and plumbed. Do not remove wedges or shims but, if protruding, cut off flush with edge of plate before packing with grout.
4. Promptly pack grout solidly between bearing surfaces and plates so no voids remain. Neatly finish exposed surfaces; protect grout and allow to cure. Comply with manufacturer's written installation instructions for shrinkage-resistant grouts.

C. Maintain erection tolerances of structural steel within AISC's "Code of Standard Practice for Steel Buildings and Bridges."

D. Align and adjust various members that form part of complete frame or structure before permanently fastening. Before assembly, clean bearing surfaces and other surfaces that will be in permanent contact with members. Perform necessary adjustments to compensate for discrepancies in elevations and alignment.

1. Level and plumb individual members of structure.
2. Make allowances for difference between temperature at time of erection and mean temperature when structure is completed and in service.

E. Splice members only where indicated.

F. Do not use thermal cutting during erection.

G. Do not enlarge unfair holes in members by burning or using drift pins. Ream holes that must be enlarged

to admit bolts.

H. Shear Stud Connectors:

1. Prepare steel surfaces as recommended by manufacturer of shear connectors.
2. Use automatic end welding of headed-stud shear connectors according to ASW D1.1 and manufacturer's written instructions.
3. Remove ceramic ferrules after welding.

3.04 FIELD CONNECTIONS

A. High-Strength Bolts: Install high-strength bolts according to RCSC's "Specification for Structural Joints Using ASTM A325 or A490 Bolts" for type of bolt and type of joint specified.

1. Joint Type: Snug tightened unless noted otherwise on Contract Drawings.
   a. High strength bolts for bearing connections shall be tightened in accordance with RCSC Specifications to a snug-tight condition. Provide hardened washers as required by the RCSC specifications.

B. Weld Connections: Comply with AWS D1.1 for tolerances, appearances, welding procedure specifications, weld quality, and methods used in correcting welding work.

1. Comply with AISC 303 and AISC 360 for bearing, alignment, adequacy of temporary connections, and removal of paint on surfaces adjacent to field welds.
2. Remove backing bars or runoff tabs, back gouge, and grind steel smooth.
3. Assemble and weld built-up sections by methods that will maintain true alignment of axes without exceeding tolerances in AISC's "Code of Standard Practice for Steel Buildings and Bridges" for mill material.

3.05 FIELD QUALITY CONTROL

A. Testing Agency: Owner will engage a qualified independent testing and inspecting agency to perform testing and inspections as noted below along with inspection schedule items included in the Contract Drawings. Testing Agency shall prepare test and inspection reports and submit in writing to Owner and Owner's consultants within 48 hours of testing or inspections. Reports shall contain Project identification name and number, date of inspection, name of testing and inspecting agency and location of inspected or tested work. In addition, reports shall include verification of compliance or deviations from the Contract Documents.

B. Bolted Connections: Bolted connections will be tested and inspected according to RCSC's "Specification for Structural Joints Using ASTM A 325 or A 490 Bolts."

C. Welded Connections: Field welds will be visually inspected according to AWS D1.1.

1. In addition to visual inspection, field welds will be tested and inspected according to AWS D1.1 and the following inspection procedures, at testing agency's option:
   a. Liquid Penetrant Inspection: ASTM E165.
   b. Magnetic Particle Inspection: ASTM E709; performed on root pass and on finished weld. Cracks or zones of incomplete fusion or penetration will not be accepted.
   c. Ultrasonic Inspection: ASTM E164.
   d. Radiographic Inspection: ASTM E94.
2. All field complete penetration groove welds shall be tested by either of the following:
   a. Ultrasonic Inspection: ASTM E164
   b. Radiographic Inspection: ASTM E94

D In addition to visual inspection, test and inspect field-welded shear connectors according to requirements in AWS D1.1 for stud welding and as follows:

1. Initial testing of shear studs at start of work period: Test weld on at least 2 shear studs at start of each work period to determine proper generator control unit, and stud welder settings. Bend studs 45 degrees from vertical by striking with hammer. Inspect weld. Do not include these studs in required total number of studs required on beam. Contractor shall add replacement studs to supplement studs tested by bending 45 degrees.
2. Visually inspect welds at shear studs: Visually inspect all studs. Test studs that do not appear to have full sound 360 degrees fillet weld at base. Test by bending 15 degrees from vertical toward nearest end of beam by striking with hammer. Contractor shall replace studs that fail this test.
3. Periodic field testing of shear studs: Test one stud on each beam or girder after weld cools. Test by bending 15 degrees from vertical toward nearest end of beam by striking with hammer. if a tested stud fails at weld, all studs on the same beam or girder shall be tested by same procedure.

Contractor shall replace studs that fail this test.

E. Correct deficiencies in Work that test reports and inspections indicate does not comply with the Contract Documents at no additional cost to owner.

3.06 REPAIRS AND PROTECTION

A. Galvanized Surfaces: Clean areas where galvanizing is damaged or missing and repair galvanizing to comply with ASTM A780.

B. Touchup Painting: Immediately after erection, clean exposed areas where primer is damaged or missing and paint with the same material as used for shop painting to comply with SSPC¬PA 1 for touching up shop-painted surfaces, unless noted otherwise in Division 09 painting Section.

1. Clean and prepare surfaces by SSPC-SP 2 hand-tool cleaning or SSPC-SP 3 power-tool cleaning.
2. Apply a compatible primer of same type as shop primer used on adjacent surfaces.

END OF SECTION

PART 1 - GENERAL

1.01 RELATED DOCUMENTS

A. Drawings and general provisions of the Contract, including General and Supplementary Conditions and Division 01 Specification Sections, apply to this Section.

1.02 SUMMARY

A. Section Includes:

1. K-series steel joists.
2. KCS-type K-series steel joists.
3. K-series steel joist substitutes.
4. Joist Girders.
5. Joist accessories.

B. Related Requirements:

1. Section 03 30 00 – Cast-In-Place Concrete
2. Section 04 22 00 – Concrete Unit Masonry
3. Section 05 12 00 - Structural Steel Framing
4. Section 05 31 00 - Steel Decking
5. Section 05 50 00 - Metal Fabrications

1.03 DEFINITIONS

A. SJI's "Specifications": Steel Joist Institute's "Standard Specifications, Load Tables and Weight Tables for Steel Joists and Joist Girders."

B. Special Joists: Steel joists or joist girders requiring modification by manufacturer to support nonuniform, unequal, or special loading conditions that invalidate load tables in SJI's "Specifications."

1.04 SUBMITTALS

A. Product Data: For each type of joist, accessory, and product.

B. Shop Drawings: Include layout, designation, number, type, location, and spacing of joists. Include joining and anchorage details, bracing, bridging, extended ends, and joist accessories; splice and connection locations and details; and attachments to other construction.

1. Submit three bond sets of shop drawings and calculations for review by the Structural Engineer-of-Record. The Structural Engineer-of-Record will mark three sets with red and will return one set to the contractor through the Architect. The contractor shall make the number of photocopies required of the approved shop drawings for distribution to other parties, and the contractor shall be responsible for transmitting the original red-marked set to the fabricator for corrections.
2. Indicate locations and details of bearing plates to be embedded in other construction.
3. Comprehensive engineering analysis of special joists prepared by and signed and sealed by the qualified professional engineer responsible for its preparation and licensed in the state where the project is located.
4. Indicate safe load carrying capacity of each joist or girder by standard joist designations or by special loads in accordance with the requirements of the Contract Drawings. Indicate all special loadings, axial loads, and concentrated loads on shop and erection drawings.
5. Reproductions of Contract Drawings shall not be used for shop drawings.

C. Qualification Data: For manufacturer.

D. Welding certificates.

E. Manufacturer certificates: Signed by manufacturers certifying that joists comply with requirements.

F. Mill Certificates: For each type of bolt, signed by bolt manufacturers certifying that bolts comply with requirements.

1.05 QUALITY ASSURANCE

A. Manufacturer Qualifications: A manufacturer certified by SJI to manufacture joists complying with applicable standard specifications and load tables in SJI's "Specifications."

1. Manufacturer's responsibilities include providing professional engineering services for designing special joists to comply with performance requirements.

B. Welding Qualifications: Qualify field-welding procedures and personnel according to AWS D1.1, "Structural Welding Code - Steel."

1.06 DELIVERY, STORAGE, AND HANDLING

A. Deliver, store, and handle joists as recommended in SJI's "Specifications."

B. Protect joists from corrosion, deformation, and other damage during delivery, storage, and handling.

1.07 SEQUENCING

A. Deliver steel bearing plates to be built into cast-in-place concrete and masonry construction.

PART 2 - PRODUCTS

2.01 PERFORMANCE REQUIREMENTS

A. Structural Performance: Provide special joists and connections capable of withstanding design loads indicated.

1. Use ASD; data are given at service-load level.

2. Design special joists to withstand design loads with live-load deflections no greater than the following:

a. Floor Joists: Vertical deflection of 1/360 for live loads and 1/240 for total loads of the span.

b. Roof Joists: Vertical deflection of 1/360 for live loads and 1/240 for total loads of the span.

2.02 K-SERIES STEEL JOISTS

A. Design joists for all loads indicated on Contract Drawings, including: dead load, live load, wind uplift, concentrated loads, axial loads, and any other special loads indicated.

B. Manufacture steel joists of type indicated according to "Standard Specifications for Open Web Steel Joists, K-Series" in SJI's "Specifications," with steel-angle top- and bottom-chord members, underslung ends, and parallel top chord.

1. Joist Type: K-series steel joists and KCS-type K-series steel joists.

C. Steel Joist Substitutes: Manufacture according to "Standard Specifications for Open Web Steel Joists, K-Series" in SJI's "Specifications," with steel-angle or -channel members.

D. Comply with AWS requirements and procedures for shop welding, appearance, quality of welds, and methods used in correcting welding work.

E. Top-Chord Extensions: Extend top chords of joists with SJI's Type S top-chord extensions where indicated, complying with SJI's "Specifications."

F. Extended Ends: Extend bearing ends of joists with SJI'S Type R extended ends where indicated, complying with SJI's "Specifications."

G. Camber joists according to SJI's "Specifications" unless noted otherwise on Contract Drawings.

H. Equip bearing ends of joists with manufacturer's standard beveled ends or sloped shoes if joist slope exceeds 1/4 inch per 12 inches.

2.03 JOIST GIRDERS

A. Manufacture joist girders according to "Standard Specifications for Joist Girders" in SJI's "Specifications," with steel-angle top- and bottom-chord members; with end and top-chord arrangements as follows:

1. End Arrangement: Underslung with bottom-chord extensions.

2. Top-Chord Arrangement: Parallel.

B. Comply with AWS requirements and procedures for shop welding, appearance, quality of welds, and methods used in correcting welding work.

C. Provide holes in chord members for connecting and securing other construction to joist girders.

D. Camber joist girders according to SJI's "Specifications.

E. Equip bearing ends of joists with manufacturer's standard beveled ends or sloped shoes if joist slope exceeds 1/4 inch per 12 inches.

2.04 PRIMERS

A. Primer: SSPC-Paint 15, or manufacturer's standard shop primer complying with performance

requirements in SSPC-Paint 15.

2.05 JOIST ACCESSORIES

A. Bridging:

1. Provide bridging anchors and number of rows of horizontal and diagonal bridging of material, size, and type required by SJI's "Specifications for type of joist, chord size, spacing, and span. Furnish additional erection bridging if required for stability.
2. Schematically indicated. Detail and fabricate according to SJI's "Specifications. Furnish additional erection bridging if required for stability.
3. Fabricate as indicated and according to SJI's "Specifications. Furnish additional erection bridging if required for stability.

B. Steel bearing plates with integral anchorages are specified in Section 05 50 00 "Metal Fabrications".

C. Furnish ceiling extensions, either extended bottom-chord elements or a separate extension unit of enough strength to support ceiling construction. Extend ends to within 1/2 inch of finished wall surface unless otherwise indicated.

D. Carbon-Steel Bolts and Threaded Fasteners: ASTM A 307, Grade A, carbon-steel, hex-head bolts and threaded fasteners; carbon-steel nuts; and flat, unhardened steel washers.

1. Finish: Plain, uncoated.

E. High-Strength Bolts, Nuts, and Washers: ASTM A 325, Type 1, heavy hex steel structural bolts; ASTM A563 heavy hex carbon-steel nuts; and ASTM F 436 hardened carbon-steel washers.

1. Finish: Plain.

F. Welding Electrodes: Comply with AWS standards.

G. Galvanizing Repair Paint: ASTM A780.

H. Furnish miscellaneous accessories including splice plates and bolts required by joist manufacturer to complete joist assembly.

I. Extended Ends: Design to cantilever from the main span of the joist, provide load capacity at least equal to that of joist.

2.06 CLEANING AND SHOP PAINTING

A. Clean and remove loose scale, heavy rust, and other foreign materials from fabricated joists and accessories by hand-tool cleaning, SSPC-SP 2 or power-tool cleaning, SSPC-SP 3.

B. Verify compatibility of primer with fire-resistive materials on joists and accessories to receive sprayed fire-resistive materials.

C. Apply one coat of shop primer to joists and joist accessories to be primed to provide a continuous, dry paint film not less than 2 mil thickness.

PART 3 - EXECUTION

3.01 EXAMINATION

A. Examine supporting substrates, embedded bearing plates, and abutting structural framing for compliance with requirements for installation tolerances and other conditions affecting performance.

B. Proceed with installation only after unsatisfactory conditions have been corrected.

3.02 INSTALLATION

A. Replace joists damaged by bending or warping during handling and erection.

B. Do not install joists until supporting construction is in place and secured.

C. Install joists and accessories plumb, square, and true to line; securely fasten to supporting construction according to SJI's "Specifications," joist manufacturer's written recommendations, and requirements in this Section.

1. Before installation, splice joists delivered to Project site in more than one piece.
2. Space, adjust, and align joists accurately in location before permanently fastening.
3. Install temporary bracing and erection bridging, connections, and anchors to ensure that joists are stabilized during construction.

D. Field weld joists to supporting steel bearing plates and framework. Coordinate welding sequence and procedure with placement of joists. Comply with AWS requirements and procedures for welding, appearance and quality of welds, and methods used in correcting welding work.

E. Bolt joists to supporting steel framework using carbon-steel bolts.

F. Install and connect bridging concurrently with joist erection, before construction loads are applied. Anchor ends of bridging lines at top and bottom chords if terminating at walls or beams. Bridging shall not be used to support conduit, piping, duct work or other equipment.

G. Joists and supporting structure shall be braced for safety and stability until permanent bracing structures are in place.

H. Hangers supporting loads in excess of 150 pounds shall not be attached directly to joist chords. See details on Contract Drawings for methods of supporting loads in excess of 150 pounds on joists.

3.03 FIELD QUALITY CONTROL

A. Testing Agency: Construction Manager will engage a qualified independent testing and inspecting agency to inspect field welds and bolted connections and to perform field tests and inspections and prepare test and inspection reports. In addition, the testing agency shall perform field tests and inspections as noted below along with the inspection schedule items included in the Contract Drawings. The testing agency shall prepare test and inspection reports and submit to the Construction Manager.

B. Visually inspect field welds according to AWS D1.1.

1. In addition to visual inspection, test field welds according to AWS D1.1/D1.1M and the following procedures, as applicable:

a. Liquid Penetrant Inspection: ASTM E165.

b. Magnetic Particle Inspection: ASTM E709.

c. Ultrasonic Testing: ASTM E164.

d. Radiographic Testing: ASTM E94.

C. Visually inspect bolted connections.

D. High-strength, field-bolted connections will be tested and verified according to procedures in RCSC’s Specifications for Structural Joints Using ASTM A325 or ASTM A490 Bolts."

E. Correct deficiencies in Work that test and inspection reports have indicated are not in compliance with specified requirements.

F. Perform additional testing to determine compliance of corrected Work with specified requirements.

3.04 PROTECTION

A. Repair damaged galvanized coatings on galvanized items with galvanized repair paint according to ASTM A780 and manufacturer's written instructions.

B. Touchup Painting: After installation, promptly clean, prepare, and prime or reprime field connections, rust spots, and abraded surfaces of prime-painted joists, bearing plates, abutting structural steel, and accessories.

1. Clean and prepare surfaces by hand-tool cleaning according to SSPC-SP 2, or power-tool cleaning according to SSPC-SP 3.

2. Apply a compatible primer of same type as primer used on adjacent surfaces.

C. Provide final protection and maintain conditions, in a manner acceptable to manufacturer and Installer, which ensure that joists and accessories are without damage or deterioration at time of Substantial Completion.

END OF SECTION

PART 1 - GENERAL

1.01 RELATED DOCUMENTS

A. Drawings and general provisions of the Contract, including General and Supplementary Conditions and Division 01 Specification Sections, apply to this Section.

1.02 SUMMARY

A. Section Includes:

1. Roof deck.
2. Composite floor deck.
3. Framing for openings less than 10 inches.

B. Related Requirements:

1. Section 03 30 00 - Cast-in-Place Concrete
2. Section 05 12 00 - Structural Steel Framing
3. Section 05 21 00 - Steel Joist Framing
4. Section 05 50 00 - Metal Fabrications
5. Section 09 91 00 - Painting

1.03 SUBMITTALS

A. Product Data: For each type of deck, accessory, and product indicated.

B. Shop Drawings: Submit shop drawings for review prior to fabrication or installation of materials.

1. Submit three bond sets of shop drawings for review by the Structural Engineer-of-Record. The Structural Engineer-of-Record will mark three sets with red and will return one set to the contractor through the Architect. The contractor shall make the number of photocopies required of the approved shop drawings for distribution to other parties, and the contractor shall be responsible for transmitting the original red-marked set to the fabricator for corrections.
2. Indicate erection layouts, details, steel deck dimensions, profile, gage, section properties, coatings and installation instructions. Show supporting framing, lengths, and markings of deck to correspond with sequence and procedure to be followed in installing and fastening deck. Show size and number of holes to be cut in deck.
3. Indicate allowable diaphragm shear capacity corresponding to pattern and type of connections provided on Contract Drawings.
4. Indicate method of installing and connecting accessories.
5. Indicate methods of fastening deck. Show fastener locations, types, sizes and sequence of connections for deck units.
    a. Welds: Use standard ASW welding symbols.
    b. Screws: Use type, size and manufacturer as noted on the Contract Drawings.
    c. Powder Actuated Fasteners: Use type, size and manufacturer as noted on the Contract Drawings.
    d. Button Punches: Use type and manufacturer.

C. Welding certificates.

D. Product Certificates: For each type of steel deck, signed by product manufacturer.

1. Certify that all deck, shear studs, and deck accessories provided meet or exceed specified requirements.
2. Certify that product and coatings conform to UL, FM, or other agency rated assembly noted on Contract Drawings.

E. Product Test Reports: Based on evaluation of comprehensive tests performed by a qualified testing agency, indicating that each of the following complies with requirements:

1. Power-actuated mechanical fasteners.

F. Evaluation Reports: For steel deck.

G. Field quality-control and inspection reports.

1.04 QUALITY ASSURANCE

A. Testing Agency Qualifications: Qualified according to ASTM E329 for testing indicated.

B. Welding Qualifications: Qualify procedures and personnel according to AWS D1.3, "Structural Welding Code - Sheet Steel."

C. Fire-Test-Response Characteristics: Where indicated, provide steel deck units identical to those tested for fire resistance per ASTM E 119 by a testing and inspecting agency acceptable to authorities having jurisdiction.

1. Fire-Resistance Ratings: Indicated by design designations of applicable testing and inspecting agency for rated assembly noted on the Contract Drawings.

2. Steel deck units shall be identified with appropriate markings of applicable testing and inspecting agency for rated assembly noted on the Contract Drawings.

D. AISI Specifications: Comply with calculated structural characteristics of steel deck according to AISI's "North American Specification for the Design of Cold-Formed Steel Structural Members."

E. FM Global Listing: Provide steel roof deck evaluated by FM Global and listed in its "Approval Guide, Building Materials" for Class 1 fire rating and Class 1-90 Windstorm ratings.

1.05 DELIVERY, STORAGE, AND HANDLING

A. Protect steel deck from corrosion, deformation, and other damage during delivery, storage, and handling. Each unit or bundle shall be labeled and marked in accordance with UL requirements, indicating manufacturer, testing, and inspection.

B. Stack steel deck on platforms or pallets and slope to provide drainage. Protect with a waterproof covering and ventilate to avoid condensation.

C. Do not overload deck during construction by workers or storage of materials.

D. Rusted, crimped or bent deck shall not be installed in the work. Replace damaged deck with new material at no additional cost to Owner.

PART 2 - PRODUCTS

2.01 PERFORMANCE REQUIREMENTS

A. AISI Specifications: Comply with calculated structural characteristics of steel deck according to AISI's "North American Specification for the Design of Cold-Formed Steel Structural Members."

B. Fire-Resistance Ratings: Comply with ASTM E 119; testing by a qualified testing agency. Identify products with appropriate markings of applicable testing agency.

1. Indicate design designations from UL's "Fire Resistance Directory" or from the listings of another qualified testing agency.

2.02 ROOF DECK

A. Manufacturers: Subject to compliance with requirements, available manufacturers offering products that may be incorporated into the Work include, but are not limited to, the following:

1. ASC Profiles, Inc.; a Blue Scope Steel company.
2. Canam United States; Canam Group Inc.
3. Consolidated Systems, Inc.; Metal Dek Group.
4. Cordeck.
5. DACS, Inc.
6. Epic Metals Corporation.
7. Marlyn Steel Decks, Inc.
8. New Millennium Building Systems, LLC.
9. Nucor Corp.; Vulcraft Group.
10. Roof Deck, Inc.
11. Valley Joist; Subsidiary of EBSCO Industries, Inc.
12. Verco Manufacturing Co.
13. Wheeling Corrugating Company; Div. of Wheeling-Pittsburgh Steel Corporation.

B. Roof Deck: Fabricate panels, without top-flange stiffening grooves, to comply with "SDI Specifications and Commentary for Steel Roof Deck," in SDI Publication No. 31, and with the following:

1. Prime-Painted Steel Sheet: ASTM A 1008, Structural Steel (SS), Grade 33 minimum, shop primed

with manufacturer's standard baked on, rust-inhibitive primer.

a. Color: Manufacturer's standard.

2. Deck Profile: As indicated on Contract Drawings.
3. Profile Depth: As indicated on Contract Drawings.
4. Design Uncoated—Steel Thickness: As indicated on Contract Drawings.
5. Span Condition: Triple span or more.
6. Side Laps: Overlapped.

2.03 COMPOSITE FLOOR DECK

A. Manufacturers: Subject to compliance with requirements, available manufacturers offering products that may be incorporated into the Work include, but are not limited to, the following:

1. ASC Profiles, Inc.; a Blue Scope Steel company.
2. Canam United States; Canam Group Inc.
3. CMC Joist & Deck.
4. Consolidated Systems, Inc.; Metal Dek Group.
5. Cordeck.
6. DACS, Inc.
7. Epic Metals Corporation.
8. Marlyn Steel Books, Inc.
9. New Millennium Building Systems, LLC.
10. Nucor Corp.; Vulcraft Group.
11. Roof Deck, lnc.
12. Verco Manufacturing Co.
13. Wheeling Corrugating Company; Div. of Wheeling-Pittsburgh Steel Corporation.

B. Composite Floor Deck: Fabricate panels, with integrally embossed or raised pattern ribs and interlocking or nestable side laps, to comply with "SDI Specifications and Commentary for Composite Steel Floor Deck," in SDI Publication No. 31, with the minimum section properties indicated, and with the following:

1. Galvanized-Steel Sheet: ASTM A653, Structural Steel (SS), Grade 33, G60 zinc coating.
2. Profile Depth: As indicated on Contract Drawings.
3. Design Uncoated-Steel Thickness: As indicated on Contract Drawings.
4. Span Condition: Triple span or more.

2.04 ACCESSORIES

A. General: Provide manufacturer's standard accessory materials for deck that comply with requirements indicated.

B. Mechanical Fasteners: Corrosion-resistant, low-velocity, powder-actuated or pneumatically driven carbon-steel fasteners; or self-drilling, self-threading screws.

C. Side-Lap Fasteners: Corrosion-resistant, hexagonal washer head; self-drilling, carbon-steel screws, No. 10 minimum diameter.

D. Flexible Closure Strips: Vulcanized, closed-cell, synthetic rubber.

E. Miscellaneous Sheet Metal Deck Accessories: Steel sheet, minimum yield strength of 33,000 psi, not less than 0.0359—inch design uncoated thickness, of same material and finish as deck; of profile indicated or required for application.

F. Pour Stops and Girder Fillers: Steel sheet, minimum yield strength of 33,000 psi, of same material and finish as deck, and of thickness and profile recommended by SDI Publication No. 31 for overhang and slab depth unless noted otherwise on the Contract Drawings.

G. Column Closures, End Closures, Z-Closures, and Cover Plates: Steel sheet, of same material, finish, and thickness as deck unless otherwise indicated.

H. Weld Washers: Uncoated steel sheet, shaped to fit deck rib, 0.0598 inch thick, with factory-punched hole of SIS-inch minimum diameter.

I. Flat Sump Plates: Single-piece steel sheet, 0.0747 inch thick, of same material and finish as deck. For drains, cut holes in the field.

J. Recessed Sump Pans: Single-piece steel sheet, 0.0747 inch thick, of same material and finish as deck, with

3 inch wide flanges and level recessed pans of 1 1/2-inch minimum depth. For drains, cut holes in the field.

K. Galvanizing Repair Paint: ASTM A780.

L. Repair Paint: Manufacturer's standard rust-inhibitive primer of same color as primer.

PART 3 - EXECUTION

3.01 EXAMINATION

A. Examine supporting frame and field conditions for compliance with requirements for installation tolerances and other conditions affecting performance.

B. Proceed with installation only after unsatisfactory conditions have been corrected.

3.02 INSTALLATION, GENERAL

A. Install deck panels and accessories according to applicable specifications and commentary in SDI Publication No. 31, manufacturer's written instructions, and requirements in this Section.

B. Where deck is indicated to be shored for placement of concrete, install shoring prior to placement of concrete.

C. Clean rust, oil, grease, and debris away from areas to which shear studs are to be welded. Remove mill scale by grinding or by sandblasting.

D. Locate deck bundles to prevent overloading of supporting members.

E. Place deck panels on supporting frame and adjust to final position with ends accurately aligned and bearing on supporting frame before being permanently fastened. Do not stretch or contract side-lap interlocks.

F. Place deck panels flat and square and fasten to supporting frame without warp or deflection.

G. Cut and neatly fit deck panels and accessories around openings and other work projecting through or adjacent to deck.

H. Provide additional reinforcement and closure pieces at openings as required for strength, continuity of deck, and support of other work.

I. Comply with AWS requirements and procedures for manual shielded metal arc welding, appearance and quality of welds, and methods used for correcting welding work.

3.03 ROOF-DECK INSTALLATION

A. Weld Attachments: Fasten roof-deck panels to steel supporting members by arc spot (puddle) welds of the surface diameter indicated or arc seam welds with an equal perimeter that is not less than 1-1/2 inches long, and as follows:

1. Weld Diameter: 5/8 inch, nominal.
2. Weld Spacing: Weld edge and interior ribs of deck units with a minimum of seven welds per deck unit at each support. Space as indicated on the Contract Drawings.
3. Side-Lap and Perimeter Edge Fastening: Fasten side laps and perimeter edges of panels between supports as indicated on Contract Drawings.

B. Mechanical Fasteners: Deck shall be attached to supporting members as noted on the Contract Drawings.

1. Spacing of fasteners shall not exceed 12 inches along each support, unless noted otherwise on the Contract Drawings.
2. Attachment shall be done immediately after the deck units are aligned.
3. Deck units shall have side laps fastened at 36 inches on center or at midspan (whichever is smaller) for spans greater than 5 feet unless otherwise specified on the Contract Drawings. Fasten deck to perimeter members parallel to deck span at 36 inches on center maximum for spans greater than 5 feet unless otherwise specified on the Contract Drawings.

C. End Bearing: Install deck ends over supporting frame with a minimum end bearing of 1-1/2 inches, with end joints as follows:

1. End Joints: Lapped 2 inches minimum.

D. Roof Sump Pans and Sump Plates: Install over openings provided in roof deck and mechanically fasten flanges to top of deck. Space mechanical fasteners not more than 6 inches apart with at least one fastener at each corner.

E. Miscellaneous Roof-Deck Accessories: Install ridge and valley plates, finish strips, end closures, and reinforcing channels according to deck manufacturer's written instructions. Mechanically fasten to substrate to provide a complete deck installation.

1. Install 6 inch minimum wide sheet steel cover plates, of same thickness as deck, where deck changes direction. Mechanically attach at 6 inches on center maximum.

F. Flexible Closure Strips: Install flexible closure strips over partitions, walls, and where indicated. Install with adhesive according to manufacturer's written instructions to ensure complete closure.

G. Reinforce steel deck openings less than 10 inches in size with 2x2x1/4 inch steel angles. Place framing angles perpendicular to flutes; extend minimum two flutes beyond each side of opening and mechanically attach to deck at each flute.

3.04 FLOOR-DECK INSTALLATION

A. Fasten floor-deck panels to steel supporting members by are spot (puddle) welds of the surface diameter indicated and as follows:

1. Weld Diameter: 5/8 inch, nominal.

2. Weld Spacing: Weld edge ribs of panels at each support. Space welds at no more than 12 inches apart.

B. Side-Lap Fastening: Fasten side laps and perimeter edges of panels between supports, at intervals not exceeding the lesser of half of the span or 24 inches, and as follows:

1. Mechanically fasten with self-drilling, No. 10 diameter or larger, carbon-steel screws.

2. Mechanically clinch or button punch.

3. Fasten with a minimum of 1-1/2-inch-long welds.

C. End Bearing: Install deck ends over supporting frame with a minimum and bearing of 1-1/2 inches, with end joints as follows:

1. End Joints: Butted.

D. Interlock sidelaps as shown on shop drawings.

E. Pour Stops and Girder Fillers: Weld steel sheet pour stops and girder fillers to supporting structure according to SDI recommendations unless otherwise indicated on the Contract Drawings.

F. Wet concrete stops at slab edge shall be upturned to top surface of slab to contain wet concrete. Provide stops of sufficient strength to remain stationary under wet concrete and construction work without distortion.

G. Floor-Deck Closures: Weld steel sheet column closures, cell closures, and Z-closures to deck, according to SDI recommendations, to provide tight-fitting closures at open ends of ribs and sides of deck.

H. Unless noted otherwise on Contract Drawings, reinforce steel deck openings less than 10 inches in size with 2x2x1/4 inch steel angles. Place framing angles perpendicular to flutes; extend minimum two flutes beyond each side of opening and mechanically attach to deck at each flute.

I. Install 6 inch minimum wide sheet steel cover plates, of same thickness as deck, where deck changes direction. Mechanically attach at 6 inches on center maximum.

3.05 FIELD QUALITY CONTROL

A. Testing Agency: Construction manager will engage a qualified independent testing agency to perform tests and inspections as noted below along with inspection schedule items included in the Contract Drawings. Testing agency shall prepare test and inspection reports and submit to the Construction Manager.

B. Inspect condition of deck units for damage and corrosion. Report deficiencies.

C. Inspect size, spacing, and quality of connections of deck to structure and at side laps for conformance with Contract Drawings. Report deficiencies.

D. Deck: Inspect deck at welded connections. Connections do not conform to specifications where deck is not intact after welding and where blow holes occurred.

E. Testing agency will report inspection results promptly and in writing to Contractor and Architect.

F. Remove and replace work that does not comply with specified requirements.

G. Additional inspecting, at Contractor's expense, will be performed to determine compliance of corrected work with specified requirements.

3.06 PROTECTION

A. Galvanizing Repairs: Prepare and repair damaged galvanized coatings on both surfaces of deck with galvanized repair paint according to ASTM A 780 and manufacturer's written instructions.

B. Repair Painting: Wire brush and clean rust spots, welds, and abraded areas on both surfaces of prime-painted deck immediately after installation, and apply repair paint.

1. Apply repair paint, of same color as adjacent shop-primed deck, to bottom surfaces of deck

exposed to view.

C. Provide final protection and maintain conditions to ensure that steel deck is without damage or deterioration at time of Substantial Completion.

D. Repair blow-holes at welds with 18 gage plates welded in place. Replace entire sections of deck where holes cannot be satisfactorily repaired.

3.07 HANGERS FOR MISCELLANEOUS EQUIPMENT

A. Do not attach hangers for ductwork, mechanical piping, or ceilings directly to metal deck.

END OF SECTION

PART 1 - GENERAL

1.01 RELATED DOCUMENTS

A. Drawings and general provisions of the Contract, including General and Supplementary Conditions and Division 01 Specification Sections, apply to this Section.

1.02 SUMMARY

A. Section Includes:

1. Structural metal stud framing.
2. Exterior non-structural metal stud framing.
3. Cold-formed metal framing for structural applications.
4. Bracing, fasteners, and related accessories for light-gauge load-bearing metal elements.
5. Interior non-load-bearing wall framing exceeding height limitations of standard, nonstructural metal framing.
6. Floor joist framing.
7. Roof rafter framing.
8. Ceiling joist framing.
9. Soffit framing.
10. Structural engineering services provided by cold-formed metal framing fabricator.

B. Related Sections:

1. Section 01 74 19 Construction Waste Management and Disposal.
2. Section 04 22 00 Concrete Unit Masonry.
3. Section 05 50 00 Metal Fabrications
3. Section 07 21 00 Thermal Insulation.
4. Section 09 29 00 Gypsum Board

1.03 REFERENCES

(Current Edition at Date of Bid)

A. Publications listed herein are part of this specification to extent referenced.

B. American Institute for Steel Construction (AISC):

1. Manual of Steel Construction.

C. American Iron and Steel Institute:

1. AISI Specification for the Design of Cold-Formed Steel Structural Members.
2. AISI Cold-Formed Steel Design Manual.
3. AISI Steel Stud Brick Veneer Design Guide.

D. American Society of Civil Engineers:

1. ASCE 7 Minimum Design Loads for Buildings and Other Structures.

E. American Society for Testing and Materials:

1. ASTM A153 Specification for Zinc (Hot-Dip Galvanized) Coatings on Iron and Steel Hardware.
2. ASTM A307 Specification for Carbon Steel Externally Threaded Standard Fasteners.
3. ASTM A370 Test Methods and Definitions for Mechanical Testing of Steel Products.
4. ASTM A653 Specification for Steel Sheet, Zinc-Coated (Galvanized) or Zinc-Iron Alloy Coated by the Hot-Dip Process.
5. ASTM A780 Practice for Repair of Damaged and Uncoated Areas of Hot-Dip Galvanized Coatings.
6. ASTM-A1003 Specification for Steel Sheet, Carbon, Metallic and Non-Metallic Coated-for Cold-Formed Framing Members
7. ASTM B633 Specification for Electrodeposited Coatings of Zinc on Iron and Steel.
8. ASTM C955 Specification-for Load-Bearing (Transverse and Axial) Steel Studs, Runners (Track), and Bracing or Bridging, for Screw Application of Gypsum Board and Metal Plaster Bases.

9. ASTM C1007 Specification for Installation of Load-Bearing (Transverse and Axial) Steel Studs and Related Accessories.
10. ASTM C1513 Specification for Steel Tapping Screws for Cold-Formed Steel Framing Connections.
11. ASTM E119 Method of Fire Tests of Building Construction and Materials.
12. ASTM E488 Test Methods for Strength of Anchors in Concrete and Masonry Elements.
13. ASTM E1190 Test Methods for Strength of Power-Actuated Fasteners Installed in Structural members.

F. American Welding Society (AWS):
1. AWS D1.1 Structural Welding Code - Steel
2. AWS D1.3 Structural Welding Code - Sheet Steel

G. Federal Specifications:
1. FS FF-P-395B - Pin, Drive, Guided and Pin, Power Actuated (Fasteners for Power Actuated and Hand Actuated Fastening Tools)
2. FS FF-S-325 Shield, Expansion, Nail, Expansion, and Nail, Drive, Screw (Devices, Anchoring Masonry)
3. FS TT-P-645 - Primer Coating, Alkyd, Corrosion-Inhibiting, Lead and Chromate Free, VOC Compliant

H. ICC Evaluation Service Inc.:
1. ES AC261 Acceptance Criteria for Connectors Used with Cold-Formed Steel Structural Members.

1.04 SUBMITTALS

A. Product Data:
1. Submit manufacturer’s literature describing products to be provided.

B. Shop Drawings:
1. Indicate locations of cold-formed framing assemblies in Project. Include types of cold-formed metal framing, sizes, gauges, shop coatings, and spacing of framing components. Show reinforcing channels, opening framing, supplemental framing, strapping, bracing, bridging, splices, and accessories.
2. Indicate connection details and fastening methods between framing members and to adjacent materials.
3. Show bearings, anchors, and other materials needed for construction activities of this section; indicate materials not supplied by manufacturer of products of this section.
4. Shop drawings shall show adjacent or related portions of Work in a complete manner.
5. Shop drawings submittal shall be coordinated with shop drawings submission of related portions of Work, such as:
    a. Concrete unit masonry; refer to Section 04 22 00
6. Submit shop drawings, prepared under supervision of a registered professional engineer. Professional engineer shall be licensed in Oklahoma.

C. Quality Assurance Submittals:
1. Design Data:
    a. Submit structural calculations prepared by manufacturer, bearing seal and signature of a registered professional engineer licensed in Oklahoma, including, but not limited to:
        1). Description of design criteria for loading and stresses.
        2). Engineering analysis depicting stress and deflection (stiffness) requirements for each framing application.
        3). Selection of framing components and accessories.
        4). Verification of attachments to structure or adjacent framing
2. Certificates:
    a. Mill Certificate for each type structural framing member, indicating following information:
        1). Bare metal thickness of steel, measured to 1/1000"
        2). Yield strength of steel
        3). Tensile strength of steel

4). Total elongation of steel in 2” gauge length

5). Chemical analysis of steel

6). Thickness of galvanized coating, measured to 1/1000"

b. Upon completion of cold-formed metal framing work, submit written certification from a registered professional engineer licensed in Oklahoma that cold-formed metal framing has been constructed in compliance with Project requirements, applicable codes, and accepted shop drawings.

c. Provide certification verifying liability insurance coverage carried by specialty engineer. Submit insurance certificate with, or before first submission of shop drawings.

3. Manufacturer’s Instructions:

a. Submit printed installation instructions for products specified that shall be basis for accepting or rejecting actual installation procedures.

1.05 QUALITY ASSURANCE

A. Qualifications:

1. Specialty Engineer:

a. Engage services of a registered professional engineer licensed in Oklahoma whose specialty includes structural design who shall be responsible for design, preparation of sh0p drawings, periodic site visits, and final certification of completed cold-formed metal framing.

b. Specialty engineer shall carry professional liability insurance coverage in aggregate amount of $1,000,000 to protect engineer from claims that may arise in performance of engineering services.

2. Manufacturer’s Qualifications:

a. Provide products from a company specializing in manufacture of steel stud truss framing components with a minimum of 5 years experience.

3. Installer’s Qualifications:

a. Installation shall be performed by a company specializing in steel stud truss framing systems with a minimum of 3 years successful experience on projects of similar size and scope as Project requirements.

4. Welder’s Qualifications:

a. Welders shall be qualified in compliance with AWS D13.

5. Single Source Responsibility:

a. Materials, including framing members, track, fasteners, and accessories shall be products of a single manufacturer or items standard with manufacturer.

b. Provide secondary materials that are produced or are specifically recommended by manufacturer of framing system materials.

B. Regulatory Requirements:

1. Calculate structural properties of cold-formed metal framing and accessories in compliance with:

a. AISC Specification for the Design 0f Cold-formed Steel Structural Members.

2. Welding shall comply with AWS D1.1 and AWS D13.

3. Where metal framing is part of a fire-resistance-rated assembly, provide framing identical to that of assemblies tested for fire resistance per ASTM E119 by a testing agency acceptable to authority having jurisdiction.

C. Pre-Installation Meetings:

1. Contractor shall schedule a conference to be held on-site at least 48 hours before metal framing erection begins. Provide not less than 72 hours advance notification to attendees, Owner, and Architect.

2. Conference attendees shall include Contractor, cold-formed metal framing installer, and installer of other trades affected by installation of metal framing.

3. Topics to be discussed at meeting shall include:

a. A review of Contract Documents and accepted shop drawings shall be made and deviations or differences shall be resolved.

b. Review areas of potential interference and conflicts, and coordinate layout and support provisions for interfacing work.

c. Review substrate conditions, requirements of related work, installation instructions, and protection measures.

4. Pre-construction conference and inspection shall serve to clarify Contract Documents, erection requirements and what work should be completed before installation can begin.

5. Prepare and submit, to parties in attendance, a written report of pre-installation conference. Report shall be submitted within 3 days following conference.

1.06 DELIVERY, STORAGE, AND HANDLING

A. Packing, Shipping, and Unloading:

1. Deliver materials in original unopened containers or bundles with labels intact.

2. Include on label for each container or bundle:

a. Manufacturer's name

b. Type, brand, and grade

B. Storage, Handling, and Protection:

1. Protect materials from corrosion, deformation, and other damage during delivery, storage, and handling.

2. Metal framing shall be stored off ground or floor with one end elevated for drainage. Protect materials from elements and against other factors that may damage materials with a waterproof covering, ventilated to avoid condensation.

PART 2 - PRODUCTS

2.01 ACCEPTABLE MANUFACTURERS

A. Cold-Formed Metal Framing and Accessories:

1. Allied American Studco Inc.

2. Clark Steel Framing Systems

3. Dale/InCor, Inc.

4. Dietrich Industries

5. Marino/Ware Division; Ware Industries Inc.

6. The Steel Network Inc. - TSN

7. Unimast, Inc.

8. Substitutions: See Section 01 25 00 - Substitution Procedures.

2.02 SYSTEM DESCRIPTION

A. General Requirements:

1. Extent of cold-formed metal framing is shown on Drawings and includes framing 18 gauge and heavier.

2. Framing assemblies consisting of metal studs 20 gauge and lighter shall be specified elsewhere in Project Manual; refer to Section 09 22 16.

B. Design Requirements:

1. Design, fabricate, and install component parts so that completed system shall withstand uniform positive and negative design wind pressures combined with other design loads in compliance with ASCE 7 times design factor for safety.

2. Design system components in compliance with AISI Specification for the Design of Cold-Formed Steel Structural Members; provide for movement of components due to thermal variations without damage, failure, or excessive stress on components.

a. Design for steel stud back-up for masonry veneer shall comply with recommendations published in A151 Steel 'Stud Brick Veneer Design Guide.

b. Design steel stud back-up for full wind and earthquake load ignoring any structural contribution from masonry veneer.

c. Unless explicitly designed as an axial load bearing system, no axial load other than self-weight shall be placed on steel stud back-up for masonry veneer.

d. Design wall bridging to provide resistance to minor axis bending and rotation of wall studs.

e. Design exterior non-load-bearing wall framing to accommodate horizontal deflection

without regard for contribution of sheathing materials.

3. Design Loads:
    a. Wind pressures shall be calculated in compliance with ASCE 7, applicable codes and ordinances, and requirements of local authorities having jurisdiction, except base calculations on a wind speed of not less than 90 mph.
4. Physical and structural properties listed by manufacturer shall be considered minimum permitted for framing members.
5. Design framing system to maintain clearances at openings, to allow for construction tolerances, and to accommodate live load deflection of primary building structure.
6. Design framing systems to provide for movement of framing members without damage or overstressing, sheathing failure, connection failure, undue strain on fasteners and anchors, or other detrimental effects when subjected to a maximum ambient temperature change of 120°F.

C. Performance Requirements:
1. Metal stud partition size, gauge, and limiting heights shall be sized for a maximum allowable horizontal deflections as follows:
    a. Fiber cement siding: 1/240th of span.
    b. Exterior Insulation and Finish System (EIFS): 1/240th of span.
    c. Brick Veneer: 1/600th of span.

D. Cold-Formed Steel Framing Standards: Unless more stringent requirements are indicated, framing shall comply with AISI S100, AISI S200, and the following:
1. Floor and Roof Systems: AISI S210.
2. Wall Studs: AISI S211.
3. Headers: AISI S212.
4. Lateral Design: AISI S213.

E. Fire-Resistance Ratings: Comply with ASTM E 119; testing by a qualified testing agency. Identify products with appropriate markings of applicable testing agency.
1. Indicate design designations from UL's "Fire Resistance Directory" or from the listings of another qualified testing agency acceptable to authorities having jurisdiction.

2.03 COLD-FORMED METAL FRAMING

A. Studs: Conforming to ASTM C955 and as follows:
1. Material: Mill-certified steel conforming to ASTM A653
    a. 18 gauge and lighter: Minimum yield strength 33,000 psi
    b. 16 gauge and heavier: Minimum yield strength 50,000 psi
2. Depth of Sections: As indicated on Drawings
3. Finish: Galvanized; G60 coating classification, zinc coated by hot-dip process; ASTM A153
4. Floor joist framing:
    a. Steel Joists: Manufacturer's standard C-shaped steel joists, of web depths indicated, punched with stiffened flanges, and as follows:
        1). Minimum Base-Metal Thickness: 12 gauge (0.0966 inch).
        2). Flange Width: 2-1/2 inches
5. Exterior non-load-bearing wall framing:
    a. Steel Studs: Manufacturer's standard C-shaped steel studs, of web depths indicated, punched, with stiffened flanges, and as follows:
        1). Minimum Base-Metal Thickness: 16 gauge (0.0538 inch).
        2). Flange Width: 1-5/8 inches
6. Roof-Rafter framing:
    a. Steel Rafters: Manufacturer's standard C-shaped steel sections, of web depths required, with stiffened flanges, and as follows:
        1). Minimum Base-Metal Thickness: 16 gauge (0.0538 inch).
        2). Flange Width: 2 inches, minimum.
7 Ceiling joist framing:

a. Steel Ceiling Joists: Manufacturer's standard C-shaped steel sections, of web depths indicated, punched with stiffened flanges, and as follows:

1). Minimum Base-Metal Thickness: 18 gauge (0.0428 inch).

2). Flange Width: 1-5/8 inches, minimum.

8. Soffit framing

a. Exterior Soffit Frame: Manufacturer's standard C-shaped steel sections, of web depths required, with stiffened flanges, and as follows:

1). Minimum Base-Metal Thickness: 16 gauge (0.0538 inch).

2). Flange Width: 2 inches, minimum.

B. Track:

1. Material: Steel, matching material, gauge, and finish of studs
2. Shape: U-shaped cold-formed channel section, unpunched, with unstiffened flanges.
3. Flange Width: 1 1/4” unless otherwise indicated
4. Size: Web depth to match stud

C. Built-Up Iambs, Headers, and Sills (alternative option):

1. Material: Mill-certified steel conforming to ASTM A653

a. Minimum yield strength 50,000 psi

2. Shape: Cold-formed C-channel section Flange
3. Width: 2 1/2" or 3 1/2”; refer to Structural Drawings
4. Depth of Sections: As indicated on Drawings
5. Gauge (Thickness): As needed for specified design requirements; but in no case less than 16 gauge (0.0538 inch)
6. Finish: Galvanized; G60 coating classification, zinc coated by hot-dip process; ASTM A153
7. Product: TSN - JamStud

2.04 FRAMING ACCESSORIES

A. Steel Sheet: ASTM A653 or A1003; Grade 50, Class 1

1. Coating: G60 hot-dipped galvanized; ASTM A153
2. Minimum Yield Strength: 50 ksi
3. Minimum Tensile Strength: 65 ksi

B. Connections:

1. Material: Mill-certified steel conforming to ASTM A653 or A1003
2. Gauge (Thickness): As needed for specified design requirements; but in no case less than 14 gauge.
3. Finish: Galvanized; G90 coating classification, zinc coated by hot-dip process; ASTM A153

C. Connector Devices:

1. Vertical Deflection Clips:

a. Description: Rigid attachment to structure and screw attachment to stud web using step-bushings to permit frictionless vertical movement

b. Thickness: 68 mils (1.72 mm) minimum

c. Size: As needed base on structural design calculations

d. Vertical deflection connection products shall have a valid ICC ES Report or equivalent complying with ICC Acceptance Criteria AC261.

e. Products:

1). Marino/Ware - WSC-1000 Deflex Clips

2). TSN - VertiClip, including step bushings or VertiTrack

2. Drift System Clips:

a. Description: Screw attachment to stud web using step-bushings to permit frictionless vertical movement

b. Thickness: 68 mils (1.72 mm) minimum

c. Size: As needed base on structural design calculations d. Product: TSN - DriftClip, including step bushings or DriftTrack

3. Rigid Clip Angles:

a. Description: Rigid attachment to structure and stud web

b. Products:

1). Marino/Ware - WSC-950 Slide Clip

2). TSN - StiffClip

D. Bridging:

1. Cold Rolled. Channel: 1 1/2" x 1/2" x 56 mil thick

a. Provide attachment through stud punch-out clamping onto stud web and wrapping around bridging channel. Provide holes for screw attachment to stud web and channel

b. Products:

1) Marino/Ware - Bridge-Rite Clip

2) TSN - BridgeClip, BridgeBar, or BuckleBridge

2. Flat Strap. Width and thickness as needed base on structural design calculations. Rigid attachment to stud flange.

3. Solid Bridging: Channel shaped bridging with lipped flanges and integral formed clips. Screw attachment to stud.

a. Thickness: 33 mils (0.84 mm) minimum

b. Size: As needed base on structural design calculations

E. Provide accessories of manufacturer's standard thickness and configuration, unless otherwise indicated as follows:

1. Supplementary framing

2. Web stiffeners

3. End clips

4. Foundation clips

5. Gusset plates

6. Stud kickers, knee braces, and girts

7. End closures

8. Hole reinforcing plates

9. Backer plates

2.05 FASTENERS

A. General Requirements:

1. Fastening components may be self-tapping screws or welding of sufficient size to insure strength of connection; provide as needed or indicated.

2. Provide galvanized fasteners for assemblies having galvanized major steel components.

3. Where protection against moisture or corrosive environment is needed, screws shall be coated.

B. Screws: ASTM C1513; corrosion resistant coated, self-drilling, pan or hex washer head Provide screw type and size as needed based on structural design calculations.

C. Anchor Bolts and Studs: ASTM A307, Grade A carbon steel, with hex-head carbon steel nuts and flat hardened-steel washers. Hot-dip zinc coated in compliance with ASTM A153.

1. Provide screw type and size as needed based on structural design calculations.

D. Expansion Anchors: FS FF-S-325, Group II, Type 4, Class 1

1. Fabricated with capability to sustain, without failure, a load equal to 5 times design load, as determined by testing per ASTM E488

2. Provide bolts listed or approved by one or more of following and of diameter and length as needed based on structural design calculations.

a. Underwriters Laboratory - UL

b. Factory Mutual - FM

c. Local building code

E. Powder Actuated Fasteners: FS FF-P-395b. Manufacturer from A151 1062 or 1065 steel, austempered to a minimum core hardness of 50 to 54 HRC and zinc plated in compliance with ASTM B633.

1. Fastener system of type suitable for application indicated fabricated from corrosion-resistant materials, with capability to sustain, without failure, a load equal to 10 times design load, as determined by testing per ASTM E1190.
2. Provide fasteners listed or approved by one or more of following and of diameter and length as needed based on structural design calculations.
    a. Underwriters Laboratory - UL
    b. Factory Mutual - FM
    c. Local building code

F. Welding Electrodes: Comply with AWS standards.

2.06 MISCELLANEOUS ACCESSORIES

A. Primer: Zinc-rich primer for galvanized surfaces conforming to F5 TT-P-645

B. Galvanizing Repair Compound: SSPC-Paint 20, spray-can applicator

2.07 FABRICATION

A. General Requirements:

1. Framing components may be pre-assembled into panels prior to erecting. Prefabricated panels shall be square, with components attached in a manner to prevent racking.
    a. Fabricate framing assemblies to greatest extent practical for final assembly in field.
    b. Fit, reinforce, and brace framing members to meet design requirements.
    c. Touch up damaged galvanized surfaces; use zinc-rich primer.
2. Cut framing members by sawing or shearing; do not torch cut. Framing components shall be cut squarely for attachment to perpendicular members, or as needed for an angular fit against abutting members.
3. Fasten cold-formed metal framing members by welding or screw fastening, as standard with fabricator. Members shall be held positively in place until properly fastened. Wire tying of framing members shall not be permitted.
    a. Comply with. AWS D1.3 requirements and procedures for welding, appearance and quality of welds, and methods used in correcting welding work.
    b. Locate mechanical fasteners and install in compliance with approved shop drawings, with screw penetrating joined members by not less than, three exposed screw threads.
4. Fasten other materials to cold-formed metal framing by welding, bolting, or screw fastening in compliance with approved shop drawings.
5. Reinforce, stiffen, and brace framing assemblies to withstand handling, delivery, and erection stresses. Lift fabricated assemblies to prevent damage or permanent distortion.

2.08 SOURCE QUALITY CONTROL

A. Fabrication Tolerances: ASTM C955

1. Length: +3/16"; -0”
2. Minimum steel thickness of members delivered to Site shall be as follows:
    a. 20 Gauge Members:
        1). Minimum Bare Metal Thickness: 00329"
        2). Maximum Design Thickness: 0.0346”
    b. 18 Gauge Members:
        1). Minimum Bare Metal Thickness: 0.0428”
        2). Maximum Design Thickness: 0.0451"
    c. 16 Gauge Members:
        1). Minimum Bare Metal Thickness: 0.0538”
        2). Maximum Design Thickness: 0.0566”
    d. 14 Gauge Members:
        1). Minimum Bare Metal Thickness: 0.0677”
        2). Maximum Design Thickness: 0.0713”

e. 12 Gauge Members:

1). Minimum Bare Metal Thickness: 0.0966”

2). Maximum Design Thickness: 0.1017”

3. Twist and Camber:

a. Studs shall be of twist and camber of a degree that will not prevent use in system for which it is intended, or that will reduce intended design structural (load bearing) capacity.

B. Perform tests for Mill Certificates in compliance with ASTM A370.

C. Fabricate assemblies level, plumb, and true to line to a maximum allowable tolerance variation of 1/8” in 10 feet and as follows:

1. Space individual framing members no more than ±1/8” from plan location. Cumulative error shall not exceed minimum fastening requirements of sheathing or other finishing material.

2. Fabricate each cold-formed metal framing assembly to a maximum out-of-square tolerance of 1/8”.

PART 3 - EXECUTION

3.01 EXAMINATION

A. Site Verification of Conditions:

1. Examine areas and conditions under which cold-formed metal framing shall be performed.

2. Prior to installation inspect work of other trades. Verify that such work is complete and accurate to point where installation may be properly commenced in strict compliance with shop drawings.

a. Bearings and substrates shall be ready for construction activities.

b. Rough-in utilities shall be in correct locations.

3. Do not proceed until unsatisfactory conditions have been corrected.

4. Commencement of installation constitutes acceptance of conditions and responsibility for satisfactory performance.

3.02 PREPARATION

A. Protection:

1. Avoid significant concentrated loads, such as construction loads due to stacking of building materials, unless adequate additional means for carrying such loads are provided.

2. Provide temporary bracing to support walls until permanent connections are completed.

3.03 ERECTION

A. General requirements:

1. Cold-formed metal framing may be shop or field fabricated for installation, or it may be field assembled. Install components in compliance with manufacturer’s instructions, shop drawings, and requirements of ASTM C1007.

2. Install members in single piece lengths except that tracks may be spliced, butt-welded, or each length anchored to a common building frame element. Splicing of load bearing components is prohibited.

3. Do not bridge building expansion and control joints with cold-formed metal framing. Independently frame both sides of joints.

4. Cut members by shearing or sawing; do not torch cut.

5. Fasten cold-formed metal framing members by welding or screw fastening, as standard with fabricator. Wire tying of framing members shall not be permitted.

a. Comply with AWS D1.3 requirements and procedures for welding, appearance and quality of welds, and methods used in correcting welding work.

1). Stud-to-Track Connections: 1/2” fillet weld, full length of inside flange dimension, inside each flange of stud onto track web.

2). Other Connections: Flat, plug, butt, or seam.

3). Minimum steel thickness for welded connections shall be 18 gauge.

4). Welds shall be touched up with zinc rich paint.

b. Locate mechanical fasteners and install in compliance with approved shop drawings,

with screw penetrating joined members by not less than three exposed screw threads.

6. Brace and reinforce load-bearing assemblies as indicated or needed for full design strength. Fasten hole-reinforcing plate over web penetrations that exceed size of manufacturer's standard punched openings.
7. Provide angles, clips, and other miscellaneous pieces needed to attach framing panels to building structure or attach other materials to framing panels.
8. Install cold-formed metal framing and securely anchor to supporting structure.
    a. Bolt or weld wall panels at horizontal and vertical junctures to produce flush, even, true-to-line joints with maximum variation in plane and true position between fabricated panels not exceeding 1/16".
9. Install cold-formed metal framing level, plumb, and true to line to a maximum allowable tolerance variation of 1/8" in 10 feet and as follows:
    a. Space individual framing members no more than ±1/8" from plan location. Cumulative error shall not exceed minimum fastening requirements of sheathing or other finishing material.
10. Temporary Shoring and Bracing:
    a. Provide for erection stresses; provide temporary bracing as construction activity progresses.
    b. Provide temporary shoring and bracing members with connections of sufficient strength to bear imposed loads.
    c. Provide temporary guy lines to achieve proper alignment of structures as erection proceeds.
    d. Remove temporary members and connections when permanent members are in place and final connections are made.
11. Provide insulation equal to that specified in Section 07 21 00 in headers, sills, boxed joists, and multiple studs at openings that will not be accessible following installation.

B. Steel Stud Framing:

1. Erect framing members and panels plumb, level, and square.
2. Align top and bottom tracks; locate as indicated, and secure track to substrates at spacing not greater than 24" on center, using fastening methods specified in manufacturer's printed installation instructions for project substrate types.
    a. At track butt joints, abutting pieces of track shall be securely anchored to a common structural element, or they shall be butt-welded or spliced together.
    b. Concrete anchors shall be installed after full compressive strength has been achieved.
3. Studs shall be plumbed, aligned and securely attached to flange or webs of both upper and lower tracks. Place studs as needed based on structural design calculations and not more than 2" from abutting walls.
4. Install double studs at jambs of openings for doors, cased openings, and windows; install intermediate studs above and below openings to align with wall stud spacing.
5. Frame corners with three studs.
6. Seat studs in track square with flange. Stud end shall be a maximum of 1/16" from surface of track web.
7. Provisions for vertical movement shall be provided as needed using clips or other means in compliance with manufacturer's recommendations.
8. Splices in axially loaded studs shall not be permitted.
9. Attach cross studs for attachment of fixtures; install framing between studs for attachment of mechanical and electrical items, and to prevent stud rotation.
10. Jack studs or cripples shall be installed below window sills, above window and door heads, at free standing stair rails and elsewhere to furnish support, and shall be securely attached to supporting members.
11. Bridging:
    a. Wall stud bridging shall be attached in a manner to prevent stud rotation.
    b. Bridging rows shall be spaced in compliance with manufacturer's recommendations, but spacing shall not exceed 4'-3" on center for axial load-bearing studs. Following shall be considered minimum bridging for wind load conditions:

1). Walls up to 10’-0" in height: One row at midpoint of height.

2). Walls over 10’-0" in height: Rows equally spaced, not to exceed 5’-0” on center.

c. Install bridging through 1 1/2” wide pre-punched holes in stud web. Attach clip connector with #10 diameter screws to bridging and stud web.

12. Provide stud walls as needed as "shear walls” for frame stability and lateral load resistance.

C. Site Tolerances:

1. Finished assemblies shall be free from twists, bends, or Open joint with members straight, square, and true to line.

a. Variation from Plumb: Maximum 1/8” in 10 feet

b. Variation from Level: Maximum 1/8” in 10 feet

c. Variation from True Plane: Maximum 1/8” in 10 feet

d. Variation from True Position: Maximum 1/4”

e. Variation of Member from Plane: Maximum 1/8”

f. Member Spacing: Not more than 1/8” plus or minus from spacing indicated

3.04 SITE QUALITY CONTROL

A. Manufacturers' Field Services:

1. Steel framing manufacturer shall provide a qualified representative for periodic. On-site reviews of fabrication and installation in compliance with manufacturer’s recommendations.

B. Inspection:

1. Specialty engineer shall perform periodic site visits sufficient to confirm, to best of his/her knowledge, erected cold-formed metal framing has been constructed in compliance with shop drawings and design calculations.

a. Members shall-be checked for bearing, completeness of attachments, reinforcement, etc.

b. Check attachments for conformance with shop drawings and design calculations.

c. Check steel studs to insure that they are installed plumb and true with full bearing in top and bottom runner tracks and with continuous uniform base support beneath.

1). Verify that proper (or greater) gauge and depth of studs were installed at proper spacing.

2). Verify that proper (or greater) gauge and depth lintel members were installed at that proper size and number of connections were used.

2. Inspection of cold-formed metal framing shall be completed prior to applying loads to members.

3. Submit one copy each of reports to Owner, Contractor, Architect, and consultants as applicable Within 2 days following site visits.

4. Reports shall give field observations, indicate compliance or non-compliance with Project requirements.

C. Field and shop welds will be subject to testing and inspecting.

D. Cold-formed steel framing will be considered defective if it does not pass tests and inspections.

E. Additional testing and inspecting, at Contractor's expense, will be performed to determine compliance of replaced or additional work with specified requirements.

3.05 REPAIR/ RESTORATION

A. Galvanizing Repairs: Prepare and repair damaged galvanized coatings on fabricated and installed cold-formed steel framing with galvanized repair paint according to ASTM A 780 and manufacturer's written instructions.

B. Provide final protection and maintain, in a manner acceptable to manufacturer and Installer, conditions that ensure that cold-formed steel framing is without damage or deterioration at time of Substantial Completion.

END OF SECTION

PART 1 - GENERAL

1.01 RELATED DOCUMENTS

A. Drawings and general provisions of the Contract, including General and Supplementary Conditions and Division 01 Specification Sections, apply to this Section.

1.02 SUMMARY

A. Section Includes:

1. Assemblies and connectors necessary to provide a rigid assembly where needed by details or conditions and not otherwise indicated.
2. Framing, supports members, anchors, bolts, shims, fasteners, and other supplementary parts not a part of other items of work, but needed to complete installation.
3. Cutting, fitting, drilling and tapping work of this Section to accommodate work of other Sections, and of concrete, masonry or other materials as needed for attaching and installing work of this Section.
4. Miscellaneous metal work including, but not limited to following:
    a. Rough hardware
    b. Loose steel lintels and angles
    c. Loose bearing and leveling plates
    d. Steel weld plates and angles for casting into concrete
    e. Steel embedded in masonry
    f. Steel to support brick veneer and related bracing
    g. Steel framing and supports for overhead doors
    h. Steel bollards
    i. Steel trim, corner guards, angle guards, and channels
    j. Elevator beams and guide rail beams
    k. Support angles for elevator door sills
    l. Steel dunnage beams
    m. Sleeves in concrete wall and slabs
    n. Castings
5. Concrete stair/step nosings
6. Shop painting
7. Hot dip galvanizing of iron and steel materials

B. Referenced Sections:

1. Section 01 74 19 - Construction Waste Management and Disposal
2. Section 04 22 00 - Concrete Unit Masonry
3. Section 09 91 00 - Painting

C. Products Supplied but not Installed under this Section:

1. Wedge inserts supporting brick relieving angles.

1.03 REFERENCES

(Current Edition at Date of Bid)

A. Publications listed herein are part of this specification to extent referenced.

B. Aluminum Association:

1. AA ASD-1 Aluminum Standards and Data

C. American Galvanizers Association:

1. AGA Inspection of Products Hot Dip Galvanized After Fabrication
2. AGA Quality Assurance Manual
3. AGA Recommended Details for Galvanized Structures

D. American Institute of Steel Construction:
   1. AISC Specifications for Design, Fabrication and Erection of Structural Steel for Buildings
   2. AISC Code of Standard Practice for Steel Buildings and Bridges
   3. AISC Manual of Steel Construction

E. American Iron and Steel Institute:
   1. AISI Steel Products Manual

F. American National Standards Institute:
   1. ANSI A14.3 Safety Code for Fixed Ladders

G. American Society for Testing and Materials:
   1. ASTM A27 Specification for Steel Castings, Carbon, for General Application
   2. ASTM A36 Specifications for Structural Steel
   3. ASTM A47 Specification for Ferritic Malleable Iron Castings
   4. ASTM A48 Specification for Gray Iron Castings
   5. ASTM A53 Specification for Pipe, Steel, Black and Hot-Dipped, Zinc-Coated Welded and Seamless
   6. ASTM A108 Specification for Steel Bars, Carbon, Cold Finished, Standard Quality
   7. ASTM A123 Specification for Zinc (Hot-Dip Galvanized) Coatings on Iron and Steel Hardware
   8. ASTM A143 Practice for Safeguarding Against Embrittlement of Hot-Dip Galvanized Structural Steel Products and Procedures for Detecting Embrittlement
   9. ASTM A153 Specification for Zinc Coating (Hot-Dip) on Iron and Steel Products
   10. ASTM A283 Specification for Low and Intermediate Tensile Strength Carbon Steel Plates
   11. ASTM A307 Specification for Carbon Steel Bolts and Studs, 60,000 psi Tensile
   12. ASTM A384 Practice for Safeguarding Against Warpage and Distortion During Hot-Dip Galvanizing of Steel Assemblies
   13. ASTM A385 Practice for Providing High-Quality Zinc Coatings (Hot-Dip)
   14. ASTM A500 Specification for Cold-Formed Welded and Seamless Carbon Steel Structural Tubing in Rounds and Shapes
   15. ASTM A501 Specification for Hot-Formed Welded and Seamless Carbon Steel Structural Tubing
   16. ASTM A536 Specification for Ductile Iron Castings
   17. ASTM A568 Specification for Steel, Carbon and High-Strength Low-Alloy Hot-Rolled Sheet, Hot-Rolled Strip and Cold-Rolled Sheet, General Requirements
   18. ASTM A569 Specification for Steel, Carbon Hot-Rolled Sheet and Strip, Commercial Quality
   19. ASTM A575 Specification for Steel Bars, Carbon, Merchant Quality, M-Grades
   20. ASTM A576 Specification for Steel Bars, Carbon, Hot-Wrought, Special Quality
   21. ASTM A653 Specification for Steel Sheet, Zinc-Coated (Galvanized) or Zinc-Iron Alloy-Coated (Galvannealed) by the Hot-Dip Process
   22. ASTM A780 Practice for Repair of Damaged and Uncoated Areas of Hot-Dip Galvanized Coatings
   23. ASTM A924 Specification for General Requirements for Steel Sheet, Metallic-Coated by the Hot-Dip Process
   24. ASTM A1008 Specification for Steel, Sheet, Cold-Rolled, Carbon, Structural, High-Strength Low-Alloy and High-Strength Low-Alloy with Improved Formability
   25. ASTM A1011 Specification for Steel, Sheet, and Strip, Hot-Rolled, Carbon, Structural, High-Strength Low-Alloy and High-Strength Low-Alloy with Improved Formability
   26. ASTM B209 Specification for Aluminum and Aluminum-Alloy Sheet and Plate
   27. ASTM B221 Specification for Aluminum-Alloy Extruded Bars, Wire, Shapes and Tubes
   28. ASTM B584 Specification for Copper Alloy Sand Castings for General Applications
   29. ASTM F593 Specification for Stainless Steel Bolts, Hex Cap Screws, and Studs
   30. ASTM F1554 Specification for Anchor Bolts, Steel, 36, 55, and 105-ksi Yield Strength
   31. ASTM C1107 Specification for Packaged Dry, Hydraulic-Cement Grout (Non-shrink)
   32. ASTM E488 Test Methods for Strength of Anchors in Concrete and Masonry Elements

H. American Welding Society:

1. AWS Structural Welding Code
2. AWS Specifications for Welding Rods and Bare Electrodes

I. Industrial Fasteners Institute:

1. IFS Handbook on Bolt, Nut, and Rivet Standards

J. Society for Protective Coatings:

1. SSPC SP-1 Specification for Solvent Cleaning
2. SSPC SP-2 Specification for Hand Tool Cleaning
3. SSPC SP-3 Specification for Power Tool Cleaning
4. SSPC SP-6 Specification for Commercial Blast Cleaning
5. SSPC PA-1 Painting Application Specification
6. SSPC PS-11 Coal Tar Epoxy-Polyamide Painting System

1.04 SUBMITTALS

A. Product Data:

1. Submit manufacturer's literature describing manufactured products to be provided including, but not limited to:
   a. Concrete stair/step nosings
   b. Paint products
   c. Non-shrink grout

B. Shop Drawings:

1. Submit scaled shop drawings showing general layout, jointing anchoring sizes and types, shapes, thickness, and other similar detailed information necessary to fully describe fabrication and installation.
2. Shop drawings for fabrication and erection of miscellaneous metal fabrications shall include plans, elevations at not less than 1" to 1'-0" scale and details of sections and connections at not less than 3" to 1'-0" scale. Provide templates for anchor and bolt installation by others.
3. Show adjacent or related portions of Work in a complete manner.
4. Welding shall be indicated on shop drawings using AWS symbols and showing length, size and spacing (if not continuous). Auxiliary views shall be shown to clarify welding. Notes such as 1/4 " weld, weld, tack weld are not acceptable.
5. Where fabrications are specified to comply with specific structural performance requirements, provide design certified by a professional engineer registered in Oklahoma.

C. Quality Assurance Submittals:

1. Certificates:
   a. Submit an original and two copies of galvanizing applicator's notarized Certificate of Compliance that hot dip galvanized coating meets or exceeds specified requirements.

1.05 QUALITY ASSURANCE

A. Qualifications:

1. Fabricator and erectors shall have not less than 5 years experience each in fabrication and erection of structural steel.
2. Welding procedures, welders, welding operations and tackers shall be qualified in compliance with American Welding Society Building Code.
3. Galvanizing applicator shall be a member in good standing of American Galvanizers Association. Company shall specialize in application of hot dip galvanizing after fabrication utilizing dry galvanizing process.

B. Regulatory Requirements:

1. Work of this Section shall be subject to requirements of applicable portions of following standards:
   a. AISC Specifications for Design, Fabrication and Erection of Structural Steel for Buildings.
   b. AISC Code of Standard Practice
   c. AISC Manual of Steel Construction
   d. AWS Structural Welding Code

1). DI-1 Structural Welding Code - Steel

2). DI-2 Structural Welding Code - Aluminum

3). DI-3 Structural Welding Code - Sheet Steel

4). DI-6 Structural Welding Code - Stainless Steel

2. Ladders shall comply with requirements of ANSI A14.3.

3. Follow procedures of AGA Quality Assurance Manual for application of hot dip galvanizing using dry galvanizing process.

1.06 PROJECT CONDITIONS

A. Field Measurements:

1. Take field measurements prior to preparation of shop drawings and fabrication, where possible. Allow for trimming and fitting when taking field measurements.

1.07 DELIVERY, STORAGE, AND HANDLING

A. Packing, Shipping, and Unloading:

1. Materials shall be unloaded, sorted, and handled in a manner and with care to prevent distortion and damage to members.

B. Storage, Handling, and Protection:

1. Place steel on shoring or blocking of sufficient size and strength to prevent metalwork from touching ground.

2. Place metalwork so that water will not stand or be trapped within pieces and so that bending under its own or superimposed weight.

3. Improperly piled, stacked, and stored metalwork will be accepted or rejected at discretion of Architect.

1.08 SEQUENCING AND SCHEDULING

A. Coordination:

1. Coordinate delivery and furnish anchorage, setting drawings, diagrams, templates, instructions, and directions for installation of anchorage that are to be embedded in adjacent construction.

1.09 COORDINATION

A. Coordinate selection of shop primers with topcoats to be applied over them. Comply with paint and coating manufacturers' written recommendations to ensure that shop primers and topcoats are compatible with one another.

B. Coordinate installation of anchorages and steel weld plates and angles for casting into concrete. Furnish setting drawings, templates, and directions for installing anchorages, including sleeves, concrete inserts, anchor bolts, and items with integral anchors, that are to be embedded in concrete or masonry. Deliver such items to Project site in time for installation.

PART 2 - PRODUCTS

2.01 METALS, GENERAL

A. Metal Surfaces, General: Provide materials with smooth, flat surfaces unless otherwise indicated. For metal fabrications exposed to view in the completed Work, provide materials without seam marks, roller marks, rolled trade names, or blemishes.

2.02 MISCELLANEOUS METALS

A. Ferrous Steel:

1. Steel Plates, Shapes, and Bars: ASTM A36

2. Steel Plates to be Bent or Cold-Formed: ASTM A283, Grade C

3. Square Steel Tubing:

a. Cold-Formed: ASTM A500

b. Hot Rolled: ASTM A501

4. Steel Pipe: ASTM A53, Type E, Grade A

a. Finish: Black, unless otherwise indicated

b. Weight: Schedule 40, unless otherwise indicated

1). Provide extra strong weight, Schedule 80, for bollards.

5. Hot Rolled Steel Bars and Bar-Sized Shapes: ASTM A575 (merchant quality) ASTM A576 (special quality); quality and grade as selected by fabricator.
6. Cold Finished Steel Bars: ASTM A108
7. Structural Steel Sheet:
    a. Cold-Rolled: ASTM A1008, Class 1; of grade needed for design loading
    b. Hot Rolled: ASTM A1011
8. Cold-Rolled Carbon Steel Sheets: ASTM A1008
9. Galvanized Carbon Steel Sheets: ASTM A653
    a. Coating Designation: ASTM A924; G90, unless otherwise indicated
10. Sheets for Cold-forming: ASTM A569 and ASTM A568, hot-rolled steel of commercial quality, pickled and oiled, free of defects which would impair work.

B. Steel Floor Plate: Commercial grade carbon steel
1. Thickness: As indicated on Drawings
2. Surface: Medium pattern; 4 way plate
3. Finish: Galvanized

C. Castings:
1. Gray Iron Castings: ASTM A48, Class 10
2. Malleable Iron Castings: ASTM A47, grade at fabricator's option
3. Nickel Silver Castings: ASTM B 584, Alloy UNS No. C97600 (20% leaded nickel bronze)

D. Aluminum:
1. Standard alloys shall conform to requirements published in AA ASD-1.
2. Alloy and Temper: As selected by fabricator to fulfill performance requirements.
3. Extrusions: ASTM B 221, Alloy 6063-T6.
    a. Shapes and Thickness: As needed to fulfill performance requirements.
4. Plate and Sheet: ASTM B 209, Alloy 6061-T6.
    a. Thickness: As needed to fulfill performance requirements.
5. Aluminum-Alloy Rolled Tread Plate: ASTM B 632/B 632M, Alloy 6061-T6.
6. Aluminum Castings: ASTM B 26/B 26M, Alloy 443.0-F.

E. Stainless Steel Sheets: AISI Type 304
1. Gauge: 24 gauge unless otherwise indicated
2. Finishes:
    a. Surfaces Exposed to View: Satin polished #4 unless otherwise indicated
    b. Surfaces Concealed from View: Mill rolled #2D

F. Slotted Channel Framing:
1. Description: Cold-formed channels with flange edges returned toward web
    a. Slotted Holes: 9 / 16" wide x 2" long
2. Metal: Galvanized steel, Grade 33; ASTM A653
    a. Coating Designation: ASTM A924; G90
3. Size: 1 5/ 8' x 1 5/ 8" unless otherwise indicated
4. Finish: Rust-inhibitive, baked-on acrylic enamel

2.03 COMPONENTS

A. Bollards: Schedule 40 steel pipe or Schedule 80 steel pipe as needed
1. Sizes: As indicated on Drawings
2. Where bollards are indicated to receive push-button controls for door operators, provide necessary cutouts for push-button controls and hole for wire.

2.04 MANUFACTURED UNITS

A. Concrete Stair/Step Nosings:
1. Base Metal: Extruded Aluminum, 6063-T3 alloy

2. Abrasive Filler: Aluminum oxide and silicon carbide in epoxy binder
    a. Color: As selected by Architect
3. Size:
    a. Width: 3"
    b. Length: Tread width less 3"
4. Products:
    a. American Safety Tread - Type 9511
    b. Arden - Model N-B30
    c. Safe-T-Metal - Type BF131
    d. Wooster - Type 231BF

2.05 ACCESSORIES

A. Cast-In-Place Anchors for Concrete: Galvanized ferrous castings
1. Metal: Either malleable iron; ASTM A47 or cast steel; ASTM A27
2. Type: Threaded or wedge type
    a. Anchors shall be capable of sustaining without failure, load imposed within a safety factor of 4 as determined by testing in compliance with ASTM E488.

B. Cast-In-Place Wedge Inserts Supporting Relieving Angles:
1. Material: Malleable iron; hot-dipped galvanized.
2. Headed Bolts, Nuts, and Washers: Zinc plated.
3. Provide anchors spaced at intervals not to exceed 4'-0" on center.
4. Products:
    a. Heckman - No. 425
    b. Hohmann & Barnard - No. HW 340

C. Shop Paints:
1. Shop Primer: Lead-free and chromate-free modified phenolic alkyd
2. Primers for Exterior Steel Coatings: Refer to Section 09 9713
3. Provide paints and coatings materials used within building waterproofing envelope with a VOC content not more than 250 g/L when calculated in compliance with South Coast Air Quality Management District (SCAQMD) Rule #1113.

D. Fasteners:
1. Comply with IFS Handbook on Bolt, Nut, and Rivet Standards and standards as follows:
    a. Bolts, Shims, and Washers: Hot-dip galvanized; ASTM A153 not less than G60 coating class at interior locations and G90 coating class at exterior locations.
    b. Bolts and Nuts: Regular hexagon head type, ASTM A307, Grade A.
        1). Finish: Plain, uncoated; except exterior locations to be hot dip galvanized; ASTM A153 not less than G90 coating class.
    c. Lag Bolts: Square-head type; FS FF-B-561
    d. Machine Screws: Corrosion resistant plated steel FS FF-S-111
    e. Plain Washers: Round carbon steel; FS FF-W-92
    f. Lock Washers: Helical spring type, carbon steel; FS FF-W-84
    g. Toggle Bolts: FS FF-B-588
        1). Provide type, class, and style as needed to fulfill performance requirements
        2). Provide hot dip galvanized bolts; ASTM A153 not less than G60 coating class at interior locations and G9O coating class at exterior locations.
2. Fasteners used with treated woods shall be coated or corrosion resistant metal (galvanized or stainless steel) sized to suit application.
    a. Bolts, Shims, and Washers:
        1). Hot Dip Galvanized: ASTM A153; G185 coating class
        2). Stainless Steel: ASTM F593
3. Anchor Bolts: ASTM F1554, Grade 36 threaded carbon steel hex-head bolts and carbon steel nuts

and flat hardened-steel washers. Hot-dip zinc coated in compliance with ASTM A153, Class C.

a. Provide screw type and size as needed based on structural design calculations.

E. Bituminous Coating: SSPC, PS-11

1. Protective materials for metals shall be cold-applied asphalt mastic, compounded for 30 mil thickness per coat.

F. Non-Shrink Grout: ASTM C11O7

1. Type: Cement based grout containing no metallic particles such as aluminum powders or iron filings, or expansive cement; ready-to-use material requiring only addition of water.

2. Compressive Strength: 5000 psi minimum.

2.06 FABRICATION

A. General Requirements:

1. Fabricate miscellaneous units to sizes, shapes and profiles as needed to receive adjacent other work to be retained by framing.

2. Materials shall be thoroughly straightened in shop before being laid out or worked in any way. Exercise care to avoid injury to material.

3. For fabrication of miscellaneous metal work which will be exposed to view, use only materials which are smooth and free of surface blemishes including pitting, seam marks, roller marks, rolled trade names and roughness. Remove such blemishes by grinding, or welding and grinding prior to cleaning, treating and application of finishes including zinc coatings.

4. Form exposed work true to line and level with accurate angles and surfaces, and straight, sharp edges.

5. Ease exposed edges to a radius of approximately 1/32".

6. Provide for anchorage as needed, coordinated with supporting structure. Fabricate and space anchoring devices to provide adequate support for intended use. Screws exposed to view in finished surfaces shall be flat-head-countersunk type with screw slots filled and finished flush and smooth with adjacent surfaces.

7. Pre-assemble items in shop to greatest possible extent possible to minimize field splicing and assembly. Steel and wrought iron work, when finished, shall be true and free from twists, bends, and open joints between component parts.

8. Disassemble units only as necessary for shipping and handling limitations. Clearly mark units for re-assembly and coordinated installation.

9. Cut, reinforce, drill and tap miscellaneous metal work to receive finish hardware and similar items.

10. Furnish inserts and anchoring devices that must be set in other work as needed for installation of miscellaneous metals work.

11. Fabricate steel members, fabrications, and assemblies indicated to receive hot dip galvanized coating in compliance with Class I guidelines described in AGA Recommended Details Galvanized Structures.

a. Fabrication practices shall be in compliance with applicable portions of ASTM A143, ASTM A384, and ASTM A385 except as specified herein.

b. Remove welding slag, splatter, and anti-splatter compounds and burrs prior to delivery for galvanizing.

c. Whenever possible, use slip joints to minimize field welding of material.

B. Joints and Connections:

1. Form exposed connections with flush, hairline joints, using concealed fasteners wherever possible. Cope intersections, weld joints, and grind smooth.

2. Fabricate joints that will be exposed to weather in a manner to exclude water or provide weep holes where water may accumulate.

3. Weld corners and seams continuously, complying with American Welding Society recommendations. At exposed connections, grind exposed welds smooth and flush to match and blend with adjoining surfaces.

4. Exposed fasteners shall be used only for joints and connections specifically indicated to have exposed fasteners.

D. Pipe Guards:

1. Fabricate pipe guards from steel plate, bent to fit flat against wall or column at both ends and to fit around pipe with 2" clearance between pipe and pipe guard. Drill each end for two 3/ 4" anchor bolts.

E. Loose Angles, Lintels, and Bearing Plates:

1. Fabricate angles, lintels, and plates as indicated on Drawings and as needed for proper installation of construction components.

2. Steel lintels shall have a bearing of not less than 6" at each end, unless otherwise indicated.

3. Hot dip galvanized exterior angles, lintels, and plates and items in exterior walls that are partially exposed to weather after.

F. Elevator Beams:

1. Provide steel beams and other miscellaneous steel components as needed for installation of elevators.

G. Steel Channel Frames:

1. Channel frames shall be mitered and welded with welds ground smooth. Provide continuous metal stops, hardware preparation, and anchors as needed.

H. Castings:

1. Castings shall be uniform in quality, free from blowholes, porosity, hard spots, shrinkage defects, swells, cracks, or other injurious defects.

2. Surfaces shall be smooth and true to pattern.

2.07 SHOP FINISHES

A. Surface. Preparation:

1. Remove loose mill scale, rust, cutting and punching burrs, oil, grease, and other deleterious materials before painting.

2. Clean steel and wrought iron work by SSPC SP-1 cleaning method, followed by SSPC SP-2 or SSPC SP-3 cleaning method to remove loose mill scale and rust.

3. Steel scheduled to receive high performance coatings, shall have surfaces cleaned and prepared using SSPC SP-6 cleaning.

B. Shop Painting:

1. Shop prime metal fabrications prior to delivery to Site. Coat surfaces whether exposed or concealed in construction.

a. Steel indicated to be galvanized, concealed by fireproofing, or in contact with concrete shall not be shop primed.

b. Do not paint within 6" of welded connections.

2. Apply shop primer in compliance with SSPC specification PA-1 as soon as possible after cleaning to surfaces except those scheduled to be galvanized, field welded, or embedded in concrete.

3. Apply one coat of primer to surfaces exposed in finished work and two coats to surfaces that will be inaccessible after their assembly and erection. Provide smooth, uniform dry film thickness of 2.0 mils. Allow shop coat to thoroughly dry before handling.

4. Where corrosion occurs prior to application of finish coatings, dean corroded areas and re-apply shop primer.

C. Refer to Section 09 91 00 for coating systems for exterior steel.

D. Galvanizing (dry process):

1. Pre-clean steel in compliance with accepted methods to produce an acceptable surface for quality hot dip galvanizing. Surface preparation for dry process galvanizing shall consist of not less than following steps:

a. Caustic cleaning

b. Add pickling

c. Fluxing

1). Steel shall be dipped or pre-fluxed in an aqueous solution of zinc ammonium chloride.

2). Material shall then be thoroughly dried prior to immersion in molten zinc.

2. Galvanize exterior steel members, fabrications, and assemblies and items in exterior walls that will be partially exposed to weather after installation in compliance with ASTM A123.

3. Galvanize interior steel members in unconditioned spaces such as parking levels, fabrications, and assemblies and items that will be partially exposed in unconditioned spaces after installation in compliance with ASTM A123.

4. Galvanize bolts, nuts and washers, and iron and steel hardware components in compliance with ASTM A153, unless otherwise indicated.

5. Coating weight shall conform to paragraph 5.1 of ASTM A123 and Table 1 of ASTM A153 as applicable. Minimum average thickness shall be 3 mils.

6. Surface finish shall be continuous, adherent, smooth and evenly distributed as possible, and free from defects detrimental to intended end use of coated component.

   a. Materials indicated to receive either shop or field applied painting shall not be quenched following galvanizing.

7. Adhesion shall withstand normal handling consistent with nature and thickness of coating and normal use of component.

8. Apply a heavy coat of bituminous paint to metal surfaces in contact with concrete or masonry. Do not apply bituminous paint on surfaces that will remain exposed in finished Work or scheduled to receive field applied finish coatings.

2.08 SOURCE QUALITY CONTROL

A. Tests and Inspection:

1. Inspection and testing of hot dip galvanized coatings shall be done under guidelines provided in AGA *Inspection of Products Hot Dip Galvanized After Fabrication*.

2. Include visual examination and tests in compliance with ASTM A123 and ASTM A153 as applicable to determine thickness of zinc coa6ng on metal surface.

B. Verification of Performance:

1. Furnish Notarized Certificate of Compliance with specified ASTM Standards. Certificate shall be signed by galvanizer and contain a detailed description of material process. Include information as to ASTM standard used for coating.

PART 3 - EXECUTION

3.01 EXAMINATION

A. Site Verification of Conditions:

1. Examine areas and conditions under which installation of metal fabrications shall be performed. Field check and verify that structural framing, enclosures, weld plates, blocking size and location of pockets are as indicated on accepted shop drawings.

2. Do not proceed un6l unsa6sfactory conditions have been corrected.

3. Commencement of installation cons6tutes acceptance of conditions and responsibility for satisfactory performance.

3.02 INSTALLATION

A. General Requirements:

1. Provide anchorage devices and fasteners where necessary for securing miscellaneous metal fabrications to in-place construction.

2. Anchor securely as shown or as needed for intended use, using concealed anchors wherever possible.

3. Set work accurately in location, alignment and elevation, plumb, level, true and free of rack, measured from established lines and levels.

4. Fit exposed connections accurately together to form 6ght hairline joints.

5. Field Welding:

   a. Comply with American Welding Society Code for procedures of manual shielded metal-arc welding appearance and quality for welds made, and methods used in correc6ng welding work.

   b. Use materials and methods that minimize distortion and develop strength and corrosion resistance of base metals.

   c. Obtain fusion without undercut or overlap.

   d. Remove welding flux immediately.

e. At exposed connections, finish exposed welds and surfaces smooth and blended so no roughness shows after finishing and contour of welded surface matches that of adjacent surface.

f. Provide ventilation to areas where field welding is done. Ventilation shall be sufficient to prevent setting off alarm systems.

B. Base and Bearing Plates:

1. Clean concrete bearing surfaces to remove bond reducing materials and roughen surfaces prior to setting base and bearing plates. Clean bottom surface of base and bearing plates.

2. Set base and bearing plates on wedges, shims, or setting nuts as needed.

3. Tighten anchor bolts after supported members have been positioned and plumbed. Do not remove wedges or shims but, if protruding, cut off flush with edge of base or bearing plate prior to packing with non-shrink grout.

4. Pack non-shrink grout solidly between bearing surfaces and plates so no voids remain. Finish exposed surfaces, protect installed materials, and allow grout to cure.

a. Comply with manufacturer's instructions for proprietary grout materials.

C. Cast-In-Place Wedge Inserts Supporting Relieving Angles: Refer to Section 03 11 00

D. Fastening to In-Place Construction:

1. Provide anchorage devices and fasteners needed for attaching miscellaneous metal work to in-place construction including threaded fasteners for concrete and masonry inserts, toggle bolts, through-bolts, lag bolts, wood screws, and other connectors as necessary.

2. Dry-pack miscellaneous metal work supported on concrete and masonry as needed to provide firm, level bearing surfaces.

E. Corrosion Protection:

1. Coat concealed surfaces of aluminum that will come into contact with grout, concrete, masonry, wood, or dissimilar metals with a heavy coat of bituminous paint.

F. Vertical Steel Ladders:

1. Support steel ladder at top and bottom. Use welded or bolted steel brackets, designed for adequate support and anchorage. Steel ladder shall be set to maintain a dimension of 7" (175 mm) between centerline of rungs and face of wall.

G. Ship's Ladder:

1. Support ship's ladder at top and bottom using welded or bolted steel brackets, designed for adequate support and anchorage.

H. Bollards:

1. Anchor bollards to existing construction with expansion anchors. Provide four, 3/4" diameter bolts at each bollard, unless otherwise indicated.

a. Embed anchor bolts at least 4" in concrete.

2. Fill bollards solidly with concrete, mounding top surface to shed water.

I. Concrete Stair/Step Nosings:

1. Place stair nosing along leading edge of step, centered in tread width. Set nosing while concrete is still plastic, but firm enough to support weight of nosing. Adjust nosing to achieve proper alignment with tread surface.

J. Pipe Guards:

1. Provide pipe guards at exposed vertical pipes in parking garage where not protected by curbs or other barriers. Install by bolting to wan or column with expansion anchors. Mount pipe guards with top edge 26" above driving surface.

K. Site Tolerances:

1. Maintain erection tolerances of metal fabrications within AISC Code of Standard Practice for Steel Buildings and Bridges, except for steel angles supporting masonry veneer and steel embedded in masonry shall comply with tolerances specified in Section 04 22 00.

3.03 ADJUSTING

A. Shop Paint Touch-Up:

1. Immediately after erection, clean field welds, bolted connections, and abraded areas of shop primer. Sand damaged areas smooth, re-dean and spot prime with same material as used for shop painting. Provide a minimum dry film thickness of 2.0 mils.

B. Galvanizing Touch-Up:

1. Repair damaged areas by one of methods listed in ASTM A780, regardless of width of abrasion (not limited to 3/16"). Minimum thickness requirements for repair methods on steel galvanized after fabrications are:

a. Organic zinc-rich paint specified applied in multiple coats to a dry film thickness of 8 mils.

b. Zinc-Repair Solder: 3 mils

END OF SECTION

PART 1 - GENERAL

1.01 RELATED DOCUMENTS

A. Drawings and general provisions of the Contract, including General and Supplementary Conditions and Division 01 Specification Sections, apply to this Section.

1.02 SUMMARY

A. Section Includes:

1. Section specifies steel stairs with railings.
2. Preassembled closed riser stairs with concrete filled treads and platforms.

B. Related Sections:

1. Section 03 30 00 - Cast-In-Place Concrete
2. Section 05 50 00 - Metal Fabrications
3. Section 05 52 13 - Pipe and Tube Railing

C. Referenced Standards:
(Current Edition at Date of Bid)

1. American Society of Civil Engineers/Structural Engineering Institute (ASCE)
   a. ASCE/SEI 7: Minimum Design Loads for Buildings and Other Structures
2. American Welding Society CAWS)
   a. AWS D1.1: Structural Welding Code - Steel
   b. AWS D1.3: Structural Welding Code - Sheet Steel
3. ASME International
   a. ASME B18.2.1: Square and Hex Bolts and Screws Inch Series
   b. ASME B18.6.3: Machine Screws and Machine Screw Nuts
   c. ASME B18.21.1: Lock Washers Cinch Series
   d. ASME B18.22.1: Plain Washers
4. American Society for Testing and Materials (ASTM International)
   a. ASTM A36: Specification for Carbon Structural Steel
   b. ASTM A82: Specification for Steel Wire, Plain, for Concrete Reinforcement
   c. ASTM A123: Specification for Zinc (Hot-Dip Galvanized) Coatings on Iron and Steel Products
   d. ASTM A185: Specification for Steel Welded Wire Reinforcement, Plain, for Concrete
   e. ASTM A307: Specification for Carbon Steel Bolts and Studs, 60000 PSI Tensile Strength
   f. ASTM A500: Specification for Cold-Formed Welded and Seamless Carbon Steel Structural Tubing in Rounds and Shapes
   g. ASTM A510: Specification for General Requirements for Wire Rods and Coarse Round Wire, Carbon Steel
   h. ASTM A513: Specification for Electric-Resistance-Welded Carbon and Alloy Steel Mechanical Tubing
   i. ASTM A563: Specification for Carbon and Alloy Steel Nuts
   j. ASTM A653: Specification for Steel Sheet, Zinc-Coated (Galvanized) or Zinc-Iron Alloy-Coated (Galvannealed) by the Hot-Dip Process
   k. ASTM A780: Practice for Repair of Damaged and Uncoated Areas of Hot-Dip Galvanized Coatings
   l. ASTM A786: Specification for Hot-Rolled Carbon, Low-Alloy, High-Strength Low-Alloy, and Alloy Steel Floor Plates
   m. ASTM A1008: Specification for Steel, Sheet, Cold-Rolled, Carbon, Structural, High-Strength Low-Alloy and High-Strength Low-Alloy with Improved Formability
   n. ASTM A1011: Specification for Steel, Sheet and Strip, Hot-Rolled, Carbon, Structural,

High-Strength Low-Alloy, High-Strength Low-Alloy with Improved Formability, and Ultra-High Strength

o. ASTM A1018: Specification for Steel, Sheet and Strip, Heavy-Thickness Coils, Hot-Rolled, Carbon Commercial, Drawing, Structural, High-Strength Low-Alloy, High-Strength Low-Alloy with Improved Formability, and Ultra-High Strength Steel

p. ASTM C1107: Specification for Packaged Dry, Hydraulic-Cement Grout (Nonshrink)

q. ASTM E488: Test Methods for Strength of Anchors in Concrete and Masonry Elements

r. ASTM E894: Test Method for Anchorage of Permanent Metal Railing Systems and Rails for Buildings

s. ASTM E93: Test Methods for Performance of Permanent Metal Railing Systems and Rails for Buildings

t. ASTM F1554: Specification for Anchor Bolts, Steel, 36, 55, and 105-ksi Yield Strength

5. Master Painters Institute (MPI)
   a. MPI#20: Epoxy Zinc-Rich Primer
   b. MPI#79: Alkyd Anti-Corrosive Metal Primer
6. National Association of Architectural Metal Manufacturers (NAAMM)
   a. NAAMM AMP 510: Metal Stairs Manual
   d. NAAMM MBG 531: Metal Bar Grating Manual
   c. Metal Finishes Manual for Architectural and Metal Products.
7. The Society for Protective Coatings (SSPC)
   a. SSPC-PA 1: Paint Application Specification No. 1: Shop, Field, and Maintenance Painting of Steel
   b. SSPC-Paint 20: Paint Specification No. 20: Zinc-Rich Primers (Type I, "Inorganic," and Type II, "Organic")
   c. SSPC-SP 3: Surface Preparation Specification No. 3: Power Tool Cleaning
   d. SSPC-SP 6/NACE No. 3: Joint Surface Preparation Standard SSPC-SP 6/NACE No. 3: Commercial Blast Cleaning

1.03 PERFORMANCE REQUIREMENTS

A. Delegated Design: Design metal stairs, including comprehensive engineering analysis by a qualified professional engineer registered in the state of Oklahoma, using performance requirements and design criteria indicated.

B. Structural Performance of Stairs: Metal stairs shall withstand the effects of gravity loads and the following loads and stresses within limits and under conditions indicated.

1. Provide metal stairs and railings capable of withstanding following structural loads without exceeding allowable design working stress of materials for stairs, railings, anchors, and connections:
   a. Treads and Platforms:
      1) Treads and platforms shall withstand a uniform load of 100 psf or a concentrated load of 300 lbs applied at any point.
2. Uniform and concentrated loads need not be assumed to act concurrently.
3. Stair Framing: Capable of withstanding stresses resulting from railing loads in addition to loads specified above.
4. Limit deflection of treads, platforms, and framing members to U240 or 1/4 inch, whichever is less.

1.04 SUBMITTALS

A. Product Data: For metal stairs and the following:

1. Prefilled metal-pan stair treads.
2. Precast concrete treads.
3. Epoxy-resin-filled stair treads.
4. Nonslip aggregates and nonslip-aggregate finishes.
5. Abrasive nosings.
6. Metal floor plate treads.

7. Paint products.

8. Grout.

B. Shop Drawings: Include plans, elevations, sections, details, size and thickness of members, and attachments to other work. Indicate size of fabricated sections intended to be delivered.

C. Samples for Initial Selection: For products involving selection of color, texture, or design.

D. Delegated-Design Submittal: For installed products indicated to comply with performance requirements and design criteria, submit Structural Design Calculations and description covering design loads and methods of design in a form acceptable to the Building Code Official. Calculations shall clearly define stair geometry, steel strength, concrete strength and connection design for each stair. Calculations shall be prepared, signed and sealed by a Professional Engineer registered in the state of the project and retained by the Contractor.

E. Qualification Data: For qualified testing agency.

F. Welding certificates.

G. Paint Compatibility Certificates: From manufacturers of topcoats applied over shop primers certifying that shop primers are compatible with topcoats.

H. Product Test Reports: Based on evaluation of comprehensive tests performed by a qualified testing agency, for stairs and railings.

1. Test railings according ASTM E894 and ASTM E935.

1.05 QUALITY ASSURANCE

A. Installer Qualifications: Fabricator of products.

B. NAAMM Stair Standard: Comply with "Recommended Voluntary Minimum Standards for Fixed Metal Stairs" in NAAMM AMP 510, "Metal Stairs Manual," for class of stair designated, unless more stringent requirements are indicated.

1. Preassembled Stairs: Commercial class.

C. Welding Qualifications: Qualify procedures and personnel according to AWS 01.1, "Structural Welding Code - Steel."

D. Welding Qualifications: Qualify procedures and personnel according to the following:

1. AWS 01.1, "Structural Welding Code - Steel."

2. AWS 01.3, "Structural Welding Code - Sheet Steel."

1.06 COORDINATION

A. Coordinate selection of shop primers with topcoats to be applied over them. Comply with paint and coating manufacturers' written recommendations to ensure that shop primers and topcoats are compatible with one another.

B. Coordinate installation of anchorages for metal stairs. Furnish setting drawings, templates, and directions for installing anchorages, including sleeves, concrete inserts, anchor bolts, and items with integral anchors, that are to be embedded in concrete or masonry. Deliver such items to Project site in time for installation.

C. Coordinate locations of hanger rods and struts with other work so that they will not encroach on required stair width and win be within the fire-resistance-rated stair enclosure.

PART 2 - PRODUCTS

2.01 METALS, GENERAL

A. Metal Surfaces, General: Provide materials with smooth, flat surfaces unless otherwise indicated. For components exposed to view in the completed work, provide materials without seam marks, roller marks, rolled trade names, or blemishes.

2.02 FERROUS METALS

A. Steel Plates, Shapes, and Bars: ASTM A36.

B. Steel Tubing: ASTM A500 (cold formed) Grade B or ASTM A513.

C. Rolled-Steel Floor Plate: ASTM A786, rolled from plate complying with ASTM A36 or ASTM A283, Grade C or D.

D. Steel Bars for Grating Treads: ASTM A36 or steel strip, ASTM A1011 or ASTM A1018.

E. Wire Rod for Grating Crossbars: ASTM A510.

F. Uncoated, Cold-Rolled Steel Sheet: ASTM A1008, structural steel, Grade 25, unless another grade is

required by design loads; exposed.

G. Uncoated, Hot-Rolled Steel Sheet: ASTM A1011, structural steel, Grade 30, unless another grade is required by design loads.

2.04 FASTENERS

A. General: Provide zinc-plated fasteners with coating complying with ASTM B633 or ASTM F1941, Class Fe/Zn 12 for exterior use, and Class Fe/Zn 5 where built into exterior walls. Select fasteners for type, grade, and class required.

B. Bolts and Nuts: Regular hexagon-head bolts, ASTM A307, Grade A; with hex nuts, ASTM A325, ASTM A 563; and, where indicated, flat washers. Galvanize per ASTM A153 for galvanized components.

C. Anchor Rods: ASTM F1554, Grade 36, of dimensions indicated; with nuts, ASTM A563; and, where indicated, flat washers.

D. Machine Screws: ASME 818.6.3.

E. Lag Screws: ASME 818.2.1.

F. Plain Washers: Round, ASME 818.22.1.

G. Lock Washers: Helical, spring type, ASME B18.21.1.

2.05 MISCELLANEOUS MATERIALS

A. Welding Rods and Bare Electrodes: Select according to AWS specifications for metal alloy welded.

B. Shop Primers: Provide primers that comply with Division 09 painting Sections.

C. Universal Shop Primer: Fast-curing, lead- and chromate-free, universal modified-alkyd primer complying with MPI#79 and compatible with topcoat.

1. Use primer containing pigments that make it easily distinguishable from zinc-rich primer.

D. Nonshrink, Nonmetallic Grout: Factory-packaged, nonstaining, noncorrosive, nongaseous grout complying with ASTM C 1107. Provide grout specifically recommended by manufacturer for interior and exterior applications.

E. Concrete Materials and Properties: Comply with requirements in Division 03 Section "Cast-in-Place Concrete" for normal-weight, air-entrained, ready-mix concrete with a minimum 28-day compressive strength of 3000 psi (20 MPa) unless otherwise indicated.

F. Welded Wire Fabric: ASTM A 185/A 185M, 6 by 6 inches, Wl.4 by Wl.4, unless otherwise indicated.

G. Stair Nosings as indicated in drawings:

1. Schluter Systems L.P. – TREP-G-S

2.06 FABRICATION, GENERAL

A. Provide complete stair assemblies, including metal framing, hangers, struts, railings, clips, brackets, bearing plates, and other components necessary to support and anchor stairs and platforms on supporting structure.

1. Join components by welding unless otherwise indicated.

2. Use connections that maintain structural value of joined pieces.

B. Preassembled Stairs: Assemble stairs in shop to greatest extent possible. Disassemble units only as necessary for shipping and handling limitations. Clearly mark units for reassembly and coordinated installation. Execute work according to the Contract Drawings and approved shop drawings.

C. Cut, drill, and punch metals cleanly and accurately. Remove burrs and ease edges to a radius of approximately 1/32 inch unless otherwise indicated. Remove sharp or rough areas on exposed surfaces.

D. Form bent-metal corners to smallest radius possible without causing grain separation or otherwise impairing work.

E. Form exposed work with accurate angles and surfaces and straight edges.

F. Weld connections to comply with the following:

1. Use materials and methods that minimize distortion and develop strength and corrosion resistance of base metals.

2. Obtain fusion without undercut or overlap.

3. Remove welding flux immediately.

4. At exposed connections, finish exposed welds to comply with MOMMA's "Voluntary Joint Finish Standards' for Type 3 welds: partially dressed weld with spatter removed.

G. Form exposed connections with hairline joints, flush and smooth, using concealed fasteners where possible. Where exposed fasteners are required, use Phillips flat-head (countersunk) screws or bolts

unless otherwise indicated. Locate joints where least conspicuous.

2.07 STEEL-FRAMED STAIRS

A. Stair Framing:

1. Fabrication and erection of stairs shall conform to the applicable portions of NAAMM standards for "Conventional Type Steel Stairs", local building codes and state laws.
2. Fabricate stringers of steel plates or channels.
   a. Provide closures for exposed ends of channel stringers.
3. Construct platforms of steel plate or channel headers and miscellaneous framing members as needed to comply with performance requirements.
4. Weld stringers to headers; weld framing members to stringers and headers.
5. Where stairs are enclosed by gypsum board assemblies, unless noted otherwise, provide hanger rods or struts to support landings from floor construction above or below. Locate hanger rods and struts where they will not encroach on required stair width and will be within the fire-resistance-rated stair enclosure.

B. Metal-Pan Stairs: Form risers, subtread pans, and subplatforms to configurations shown on the Contract Drawings from steel sheet of thickness needed to comply with performance requirements but not less than 0.067 inch.

1. Steel Sheet: Uncoated hot-rolled steel sheet.
2. Attach risers and subtreads to stringers with brackets made of steel angles or bars. Weld brackets to stringers and attach metal pans to brackets by welding, riveting, or bolting.

2.08 FINISHES

A. Comply with NAAMM's "Metal Finishes Manual for Architectural and Metal Products" for recommendations for applying and designating finishes.

B. Finish metal stairs after assembly.

C. Preparation for Shop Priming: Prepare uncoated ferrous-metal surfaces to comply with SSPC-SP 6/NACE No. 3, "Commercial Blast Cleaning." SSPC-SP 3, "Power Tool Cleaning." minimum requirements indicated below for SSPC surface preparation specifications and environmental exposure conditions of installed products:

1. Interior Stairs: SSPC-SP 3, "Power Tool Cleaning."

D. Apply shop primer to uncoated surfaces of metal stair components, except those with galvanized finishes and those to be embedded in concrete or masonry unless otherwise indicated. Comply with SSPC-PA 1, "Paint Application Specification No. 1: Shop, Field, and Maintenance Painting of Steel," for shop painting.

1. Stripe paint comers, crevices, bolts, welds, and sharp edges.

PART 3 - EXECUTION

3.01 INSTALLATION, GENERAL

A. Fastening to In-Place Construction: Provide anchorage devices and fasteners where necessary for securing metal stairs to in-place construction. Include threaded fasteners for concrete and masonry inserts, through-bolts, lag bolts, and other connectors.

B. Cutting, Fining, and Placement: Perform cutting, drilling, and fining required for installing metal stairs. Set units accurately in location, alignment, and elevation, measured from established lines and levels and free of rack.

C. Install metal stairs by welding stair framing to steel structure or to weld plates cast into concrete unless otherwise indicated.

D. Provide temporary bracing or anchors in formwork for items that are to be built into concrete, masonry, or similar construction.

E. Fit exposed connections accurately together to form hairline joints. Weld connections that are not to be left as exposed joints but cannot be shop welded because of shipping size limitations. Do not weld, cut, or abrade surfaces of exterior units that have been hot-dip galvanized after fabrication and are for bolted or screwed field connections.

F. Field Welding: Comply with requirements for welding in "Fabrication, General" Article.

G. Place and finish concrete fill for treads and platforms to comply with Section 03 3000 "Cast-in-Place Concrete."

1. Install abrasive nosings with anchors fully embedded in concrete. Center nosings on tread width.

3.02 ADJUSTING AND CLEANING

A. Touchup Painting: Immediately after erection, clean field welds, bolted connections, and abraded areas of shop paint, and paint exposed areas with same material as used for shop painting to comply with SSPC-PA 1 for touching up shop-painted surfaces.

1. Apply by brush or spray to provide a minimum 2.0-mil dry film thickness.

END OF SECTION

PART 1 - GENERAL

1.01 RELATED DOCUMENTS

A. Drawings and general provisions of the Contract, including General and Supplementary Conditions and Division 01 Specification Sections, apply to this Section.

1.02 SUMMARY

A. Section Includes:

1. Steel pipe tube railings.

1.03 PERFORMANCE REQUIREMENTS

A. Design, fabricate, and test railing assemblies in accordance with the most stringent requirements of ASTM E985 and applicable local code.

B. Delegated Design: Design railings, including comprehensive engineering analysis by a qualified professional engineer, using performance requirements and design criteria indicated.

C. Structural Performance: Railings shall withstand the effects of gravity loads and the following loads and stresses within limits and under conditions indicated:

1. Top Rail of Guards:
   a. Concentrated load of 200 lbs applied at any point and in any direction
   b. Uniform load of 50 lbs per foot applied horizontally and concurrently with uniform load of 100 lbs per foot applied vertically downward
   c. Concentrated and uniform loads above need not be assumed to act concurrently
2. Hand rails Not Serving as Top Rails:
   a. Concentrated load of 200 lbs applied at any point and in any direction
   b. Uniform load of 50 lbs per foot applied in any direction
   c. Concentrated and uniform loads above need not be assumed to act concurrently
3. Guard Infill Area:
   a. Concentrated horizontal load of 200 lbs applied to 1 sq. ft. at any point in system, including panels, intermediate rails, balusters, or other elements composing infill area
   b. Intermediate rails and filler panels shall withstand 50 lbs per square foot
   c. Loads need not be assumed to act concurrently with loads on top rails in determining stress on guard
4. Clear distance between components of guardrail in-fill shall be such that a sphere 4" in diameter cannot pass through openings.
5. Provide handrails on both sides of accessible stairs.
6. Handrail shall also be continuous.

D. Control of Corrosion: Prevent galvanic action and other forms of corrosion by insulating metals and other materials from direct contact with incompatible materials.

E. Allow for expansion and contraction of members and building movement without damage to connections or members.

1.04 SUBMITTALS

A. Product Data: For the following:

1. Manufacturer's product lines of mechanically connected railings.
2. Railing brackets.
3. Grout, anchoring cement, and paint products.

B. Shop Drawings: Include plans, elevations, sections, details, and attachments to other work.

C. Delegated-Design Submittal: For installed products indicated to comply with performance requirements and design criteria, including analysis data signed and sealed by the qualified professional engineer responsible for their preparation.

1.05 DELIVERY, STORAGE, AND HANDLING

A. Protect mechanical finishes on exposed surfaces from damage by applying a strippable, temporary

protective covering before shipping.

1.06 FIELD CONDITIONS

A. Field Measurements: Verify actual locations of walls and other construction contiguous with metal fabrications by field measurements before fabrication.

PART 2 - PRODUCTS

2.01 METALS, GENERAL

A. Metal Surfaces, General: Provide materials with smooth surfaces, without seam marks, roller marks, rolled trade names, stains, discolorations, or blemishes.

B. Brackets, Flanges, and Anchors: Cast or formed metal of same type of material and finish as supported rails unless otherwise indicated.

2.02 STEEL AND IRON

A. Tubing (Hollow Structural Steel, or HSS): ASTM A500 (cold formed), Grade B, 42-ksi minimum yield stress.

B. Pipe: ASTM A53/A53M, Type F or Type S, Grade A, Standard Weight (Schedule 40), unless another grade and weight are required by structural loads.

C. Plates, Shapes, and Bars: ASTM A36/A36M

D. Cast Iron: Either gray iron, ASTM A48/A48M, or malleable iron, ASTM A47/A47M, unless otherwise

2.03 MISCELLANEOUS MATERIALS

A. Fasteners: Provide the following:

1. Ungalvanized-Steel Railings: Plated steel fasteners complying with ASTM B 633 or ASTM F1941, Class Fe/Zn 5 for zinc coating.

2. Hot-Dip Galvanized Railings: Type 304 stainless-steel or hot-dip zinc-coated steel fasteners complying with ASTM A 153/A 153M or ASTM F 2329 for zinc coating.

3. Provide exposed fasteners with finish matching appearance, including color and texture, of railings.

B. Fasteners for Anchoring Railings to Other Construction: Provide fasteners to other types of construction as indicated in drawings or select fasteners of type, grade, and class required to produce connections suitable for anchoring railings to other types of construction indicated.

C. Post-Installed Anchors: Torque-controlled expansion anchors or chemical anchors capable of sustaining, without failure, a load equal to six times the load imposed when installed in unit masonry and four times the load imposed when installed in concrete, as determined by testing according to ASTM E488, conducted by a qualified independent testing agency.

C. Etching Cleaner for Galvanized Metal: Complying with Division 09 Painting sections.

D. Galvanizing Repair Paint: High-zinc-dust-content paint complying with SSPC-Paint 20 and compatible with paints specified to be used over it.

E. Shop Primers: Provide primers that comply with Division 09 Painting sections.

F. Universal Shop Primer: Fast-curing, lead- and chromate-free, universal modified-alkyd primer complying with MPI#79 and compatible with topcoat.

G. Shop Primer for Galvanized Steel: Water based galvanized metal primer complying with Division 09 Painting sections.

H. Epoxy Intermediate Coat: Complying with Division 09 Painting sections and compatible with primer and topcoat.

I. Bituminous Paint: Cold-applied asphalt emulsion complying with ASTM D1187.

J. Nonshrink, Nonmetallic Grout: Factory-packaged, nonstaining, noncorrosive, nongaseous grout complying with ASTM C1107. Provide grout specifically recommended by manufacturer for interior and exterior applications.

2.04 STEEL AND IRON FINISHES

A. Items for exterior use and in waterpark shall be galvanized. Items for interior use and non-waterpark areas may be nongalvanized or galvanized.

B. Galvanized Railings:

1. Hot-dip galvanize exterior steel and iron railings, including hardware, after fabrication.

2. Hot-dip galvanize indicated steel and iron railings, including hardware, after fabrication.

3. Comply with ASTM A123/A123M for hot-dip galvanized railings.

4. Comply with ASTM A153/A153M for hot-dip galvanized hardware.

C. Preparing Galvanized Railings for Shop Priming: After galvanizing, thoroughly clean railings grease, dirt, oil, flux, and other foreign matter, and treat with etching cleaner.

D. Preparation for Shop Priming: Prepare uncoated ferrous-metal surfaces to comply with SSPC-SP 6/NACE No. 3, "Commercial Blast Cleaning"

E. Primer Application: Apply shop primer to prepared surfaces of railings unless otherwise indicated. Comply with requirements in SSPC-PA 1, "Paint Application Specification No. 1: Shop, Field, and Maintenance Painting of Steel," for shop painting.

1. Do not apply primer to galvanized surfaces.

F. Powder-Coat Finish:

1. Prepare, treat, and coat ferrous metal to comply with resin manufacturer's written instructions and as follows:

a. Items to be galvanized shall be cleaned by thoroughly removing grease, dirt, oil, flux, and other foreign matter.

1). Treat prepared metal with zinc-phosphate pretreatment, rinse, and seal surfaces.

b. Nongalvanized items shall be prepared according to SSPC-SP 6.

1). When recommended by resin manufacturer, treat prepared metal with iron-phosphate pretreatment, rinse, and seal surfaces.

2. Apply thermosetting polyester or acrylic urethane powder coating with cured-film thickness not less than 1.5 mils.

a. Color and gloss shall be as selected by Architect from manufacturer's full range.

PART 3 - EXECUTION

3.01 INSTALLATION

A. Set railings accurately in location, alignment, and elevation; measured from established lines and levels and free of rack.

1. Do not weld, cut, or abrade surfaces of railing components that have been coated or finished after fabrication and that are intended for field connection by mechanical or other means without further cutting or fitting.

2. Set posts plumb within a tolerance of 1/16 inch in 3 feet.

3. Align rails so variations from level for horizontal members and variations from parallel with rake of steps and ramps for sloping members do not exceed 1/4 inch in 12 feet.

B. Corrosion Protection: Coat concealed surfaces of aluminum that will be in contact with grout, concrete, masonry, wood, or dissimilar metals, with a heavy coat of bituminous paint.

C. Anchor posts in concrete by inserting into preset metal pipe sleeves and grouting annular space.

D. Anchor posts to metal surfaces with oval flanges unless otherwise indicated.

E. Attach railings to wall with wall brackets, except where end flanges are used. Use type of bracket with predrilled hole for exposed bolt anchorage unless otherwise indicated.

F. Secure wall brackets and railing end flanges to building construction as follows:

1. For concrete and solid masonry anchorage, use drilled-in expansion shields and hanger or lag bolts.

2. For steel-framed partitions, use self-tapping screws fastened to steel framing or to concealed steel reinforcements.

3.02 ADJUSTING AND CLEANING

A. Touchup Painting: Immediately after erection, clean field welds, bolted connections, and abraded areas of shop paint, and paint exposed areas with the same material as used for shop painting to comply with SSPC-PA 1 for touching up shop-painted surfaces.

B. Galvanized Surfaces: Clean field welds, bolted connections, and abraded areas and repair galvanizing to comply with ASTM A780.

END OF SECTION

PART 1 - GENERAL

1.01 RELATED DOCUMENTS

A. Drawings and general provisions of the Contract, including General and Supplementary Conditions and Division 01 Specification Sections, apply to this Section.

1.02 SECTION INCLUDES

A. Sheathing.

B. Roofing nailers.

C. Preservative treated wood materials.

D. Fire retardant treated wood materials.

E. Concealed wood blocking, nailers, and supports.

1.03 RELATED REQUIREMENTS

A. Section 06 16 00 - Sheathing: Gypsum-based sheathing.

1.04 REFERENCESTANDARDS

(Current Edition at Date of Bid)

A. ASTM A153/A153M - Standard Specification for Zinc Coating (Hot-Dip) on Iron and Steel Hardware.

B. ASTM D2898 -Standard Test Methods for Accelerated Weathering of Fire-Retardant-Treated Wood for Fire Testing.

C. ASTM E84 -Standard Test Method for Surface Burning Characteristics of Building Materials.

D. AWPA U1 -Use Category System: User Specification for Treated Wood; American Wood Protection Association.

E. PS 1 -Structural Plywood.

F. PS 20 -American Softwood Lumber Standard; National Institute of Standards and Technology, Department of Commerce.

G. SPIB (GR) -Grading Rules; Southern Pine Inspection Bureau, Inc.

1.05 SUBMITTALS

A. See Section 01 33 00 - Submittal Procedures.

B. Structural Composite Lumber: Submit manufacturer's published structural data including span tables, marked to indicate which sizes and grades are being used; if structural composite lumber is being substituted for dimension lumber or timbers, submit grading agency structural tables marked for comparison.

C. Sheathing Panel Product Data: Submit product data for each type of process and factory-fabricated product. Indicate component materials and dimensions and include construction and application details.

1.06 DELIVERY, STORAGE, AND HANDLING

A. General: Cover wood products to protect against moisture. Support stacked products to prevent deformation and to allow air circulation.

B. Fire Retardant Treated Wood: Prevent exposure to precipitation during shipping, storage, or installation.

C. Lumber: Stack lumber flat with spacers beneath and between each bundle to provide air circulation. Protect lumber from weather by covering with waterproof sheeting, securely anchored. Provide for air circulation around stacks and under coverings.

D. Sheathing Panels: Stack panels flat with spacers beneath and between each bundle to provide air circulation. Protect sheathing from weather by covering with waterproof sheeting, securely anchored. Provide for air circulation around stacks and under coverings.

1.07 WARRANTY

A. See Section 01 78 00 - Closeout Submittals, for additional warranty requirements.

B. Correct defective Work within a five year period after Date of Substantial Completion.

PART 2 - PRODUCTS

2.01 GENERAL REQUIREMENTS

A. Dimension Lumber: Comply with PS 20 and requirements of specified grading agencies.

1. Species: Douglas Fir-Larch, unless otherwise indicated.

2. If no species is specified, provide any species graded by the agency specified; if no grading agency is specified, provide lumber graded by any grading agency meeting the specified requirements.

3. Grading Agency: Any grading agency whose rules are approved by the Board of Review, American Lumber Standard Committee (www.alsc.org) and who provides grading service for the species and grade specified; provide lumber stamped with grade mark unless otherwise indicated.

B. Lumber fabricated from old growth timber is not permitted.

2.02 DIMENSION LUMBER FOR CONCEALED APPLICATIONS

A. Grading Agency: Southern Pine Inspection Bureau, Inc. (SPIB).

B. Sizes: Nominal sizes as indicated on drawings, S4S.

C. Moisture Content: S-dry or MC19.

D. Miscellaneous Framing, Blocking, Nailers, Grounds, and Furring:

1. Lumber: S4S, No. 2 or Standard Grade.

2. Boards: Standard or No. 3.

2.03 CONSTRUCTION PANELS

A. General Wood Panel Products:

1. Plywood: Comply with DOC PS 1.

2. Thickness: As needed to comply with requirements specified, but not less than thickness indicated.

3. Factory mark panels to indicate compliance with applicable standards.

B. Wall Sheathing: APA PRP-108, Structural I Rated; fire retardant treated sheathing, Exterior Exposure Class, unless otherwise noted on drawings.

C. Other Applications:

1. Plywood Concealed From View But Located Within Exterior Enclosure: PS 1, C-C Plugged or better, Exterior grade.

2. Plywood Exposed to View But Not Exposed to Weather: PS 1, A-D, or better.

3. Other Locations: PS 1, C-D Plugged or better.

D. Communications and Electrical Room Mounting Boards: PS 1 A-D plywood, fire retardant treated; 3/4 inch (19 mm) thick; flame spread index of 25 or less, smoke developed index of 450 or less, when tested in accordance with ASTM E84.

2.04 ACCESSORIES

A. Fasteners and Anchors:

1. Metal and Finish: Hot-dipped galvanized steel per ASTM A153/A153M for high humidity and preservative-treated wood locations, unfinished steel elsewhere.

2. Drywall Screws: Bugle head, hardened steel, power driven type, length three times thickness of sheathing.

3. Provide fasteners of size and type indicated that comply with requirements specified in this article for material and manufacturer.

4. Provide fasteners with hot-dip zinc coating complying with ASTM A153.

5. Nails: ASTM F1667.

6. Wood Screws: ASME B18.6.1

7. Roof sheathing clips: Place between all trusses and rafters at non-tongue-and-groove roof sheathing locations.

B. Die-Stamped Connectors: hot dipped galvanized steel, size to suit framing conditions.

1. For contact with preservative treated wood in exposed locations, provide minimum G185 galvanizing per ASTM A653/A653M.

2.05 FACTORY WOOD TREATMENT

A. Treated Lumber and Plywood: Comply with requirements of AWPA U1 -Use Category System for wood treatments determined by use categories, expected service conditions, and specific applications.

1. Fire-Retardant Treated Wood: Mark each piece of wood with producer's stamp indicating

compliance with specified requirements.

2. Preservative-Treated Wood: Provide lumber and plywood marked or stamped by an ALSC-accredited testing agency, certifying level and type of treatment in accordance with AWPA standards.

B. Fire Retardant Treatment:

1. Exterior Type: AWPA U1, Category UCFB, Commodity Specification H, chemically treated and pressure impregnated; capable of providing a maximum flame spread rating of 25 when tested in accordance with ASTM E84, with no evidence of significant combustion when test is extended for an additional 20 minutes both before and after accelerated weathering test performed in accordance with ASTM D2898.

a. Kiln dry wood after treatment to a maximum moisture content of 19 percent for lumber and 15 percent for plywood.

b. Do not use treated wood in direct contact with the ground.

2. Interior Type A: AWPA U1, Use Category UCFA, Commodity Specification H, low temperature (low hygroscopic) type, chemically treated and pressure impregnated; capable of providing a maximum flame spread rating of 25 when tested in accordance with ASTM E84, with no evidence of significant combustion when test is extended for an additional 20 minutes.

a. Kiln dry wood after treatment to a maximum moisture content of 19 percent for lumber and 15 percent for plywood.

b. Treat rough carpentry items as indicated.

c. Do not use treated wood in applications exposed to weather or where the wood may become wet.

C. Preservative Treatment:

1. Preservative Pressure Treatment of Lumber Above Grade: AWPA U1, Use Category UC3B, Commodity Specification A using waterborne preservative to 0.25 lb/cu ft (4.0 kg/cu m) retention.

a. Kiln dry lumber after treatment to maximum moisture content of 19 percent.

b. Treat lumber in contact with roofing, flashing, or waterproofing.

c. Treat lumber in contact with masonry or concrete.

d. Treat lumber less than 18 inches above grade.

e. Preservative Pressure Treatment of Plywood Above Grade: AWPA U1, Use Category UC2 and UC3B, Commodity Specification F using waterborne preservative to 0.25 lb/cu ft retention.

1). Kiln dry plywood after treatment to maximum moisture content of 19 percent.

2). Treat plywood in contact with roofing, flashing, or waterproofing.

3). Treat plywood in contact with masonry or concrete.

4). Treat plywood less than 18 inches above grade.

2. Preservative Pressure Treatment of Plywood Above Grade: AWPA U1, Use Category UC2 and UC3B, Commodity Specification F using waterborne preservative to 0.25 lb/cu ft (4.0 kg/cu m) retention.

a. Kiln dry plywood after treatment to maximum moisture content of 19 percent.

3. Preservative Pressure Treatment of Lumber in Contact with Soil: AWPA U1, Use Category UC4A, Commodity Specification A using waterborne preservative to 0.4 lb/cu ft (6.4 kg/cu m) retention.

a. Preservative for Field Application to Cut Surfaces: As recommended by manufacturer of factory treatment chemicals for brush-application in the field.

b. Restrictions: Do not use lumber or plywood treated with chromated copper arsenate (CCA) in exposed exterior applications subject to leaching.

PART 3 - EXECUTION

3.01 PREPARATION

A. Where wood framing bears on cementitious foundations, install full width sill flashing continuous over top of foundation, lap ends of flashing minimum of 4 inches (100 mm) and seal.

B. Install sill gasket under sill plate of framed walls bearing on foundations; puncture gasket cleanly to fit tightly around protruding anchor bolts.

C. Coordinate installation of rough carpentry members specified in other sections.

3.02 INSTALLATION - GENERAL

A. Select material sizes to minimize waste.

B. Reuse scrap to the greatest extent possible; clearly separate scrap for use on site as accessory components, including: shims, bracing, and blocking.

C. Where treated wood is used on interior, provide temporary ventilation during and immediately after installation sufficient to remove indoor air contaminants.

D. Fire-Retardant Treated Wood: All permanently installed wood or wood products shall be fire retardant treated as required by the governing building code per the listed construction classification.

3.03 BLOCKING, NAILERS, AND SUPPORTS

A. Provide framing and blocking members as indicated or as required to support finishes, fixtures, specialty items, and trim.

B. In framed assemblies that have concealed spaces, provide solid wood fireblocking as required by applicable local code, to close concealed draft openings between floors and between top story and roof/attic space; other material acceptable to code authorities may be used in lieu of solid wood blocking.

C. In walls, provide blocking attached to studs as backing and support for wall-mounted items, unless item can be securely fastened to two or more studs or other method of support is explicitly indicated.

D. Where ceiling-mounting is indicated, provide blocking and supplementary supports above ceiling, unless other method of support is explicitly indicated.

E. Specifically, provide the following non-structural framing and blocking:

1. Cabinets and shelf supports.
2. Wall brackets.
3. Handrails.
4. Grab bars.
5. Towel and bath accessories.
6. Wall-mounted door stops.
7. Chalkboards and marker boards.
8. Wall paneling and trim.
9. Joints of rigid wall coverings that occur between studs.

3.04 INSTALLATION OF CONSTRUCTION PANELS

A. General:

1. Comply with applicable recommendations in APA Form No. E30 “Engineered Wood Construction Guide”.
2. Do not use materials with defects that impair quality of sheathing or pieces that are too small to sue with minimum number of joints or optimum joint arrangements. Arrange Joints so that pieces do not span between fewer than three support members.
3. Cut panels at penetrations, edges, and other obstructions of work; fit tightly against abutting construction unless otherwise indicated.
4. Securely attach to substrate by fastening as indicated on the drawings.
5. Use common wire nails unless otherwise indicated. Select fasteners of size that will not fully penetrate members where opposite side will be exposed to view or will receive finish materials. Make tight connections. Install fasteners without splitting wood.
6. Coordinate wall and roof sheathing installation with flashing and joint-sealant installation so these materials are installed in sequence and manner that prevent exterior moisture from passing through completed assembly.
7. Do not bridge building expansion joints; cut and space edges of panels to match spacing of structural support elements.
8. Coordinate sheathing installation with installation of materials installed over sheathing so sheathing is not exposed to precipitation or left exposed at end of the workday when rain is forecast.
9. Space panels 1/8 inch apart at edges and ends.
10. At fire-rated walls, install board over wall board indicated as part of the fire-rated assembly.
11. Where boards are indicated as full floor-to-ceiling height, install with long edge of board parallel

to studs.

12. Install adjacent boards without gaps.

B. Wall Sheathing: Secure with long dimension perpendicular to wall studs, with ends over firm bearing and staggered, using nails, screws, or staples.

3.05 SITE APPLIED WOOD TREATMENT

A. Apply preservative treatment compatible with factory applied treatment at site-sawn cuts, complying with manufacturer's instructions.

B. Allow preservative to dry prior to erecting members.

3.06 TOLERANCES

A. Framing Members: 1/4 inch (6 mm) from true position, maximum.

B. Surface Flatness of Floor: 1/8 inch in 10 feet (1 mm/m) maximum, and 1/4 inch in 30 feet (7 mm in 10 m) maximum.

C. Variation from Plane (Other than Floors): 1/4 inch in 10 feet (2 mm/m) maximum, and 1/4 inch in 30 feet (7 mm in 10 m) maximum.

3.07 CLEANING

A. Do not leave any wood, shavings, sawdust, etc. on the ground or buried in fill.

B. Prevent sawdust and wood shavings from entering the storm drainage system.

3.08 PROTECTION

A. Protect wood that has been treated with inorganic boron (SBX) from weather. If, despite protection, inorganic boron-treated wood becomes wet, apply EPA-registered borate treatment. Apply borate solution by spraying to comply with EPA-registered label.

B. Protect rough carpentry from weather. If, despite protection, rough carpentry becomes wet, apply EPA-registered borate treatment. Apply borate solution by spraying to comply with EPA-registered label.

END OF SECTION

PART 1 - GENERAL

1.01 RELATED DOCUMENTS

A. Drawings and general provisions of the Contract, including General and Supplementary Conditions and Division 1 Specification Sections, apply to this Section.

1.02 SUMMARY

A. Section Includes:

1. Wall sheathing.

1.03 Related Requirements

A. Section 06 1000 - Rough Carpentry for plywood backing panels.

B. Section 07 2726 - Fluid-Applied Membrane Air Barriers for seam treatment at sheathing and water-resistive barrier applied over wall sheathing.

1.04 SUBMITTALS

A. Product Data: For each type of process and factory-fabricated product. Indicate component materials and dimensions and include construction and application details.

1. Include data for wood-preservative treatment from chemical treatment manufacturer and certification by treating plant that treated plywood complies with requirements. Indicate type of preservative used and net amount of preservative retained.

2. Include data for fire-retardant treatment from chemical treatment manufacturer and certification by treating plant that treated plywood complies with requirements. Include physical properties of treated materials.

3. For fire-retardant treatments, include physical properties of treated plywood both before and after exposure to elevated temperatures, based on testing by a qualified independent testing agency according to ASTM D 5516.

4. For products receiving a waterborne treatment, include statement that moisture content of treated materials was reduced to levels specified before shipment to Project site.

5. Include copies of warranties from chemical treatment manufacturers for each type of treatment.

B. Evaluation Reports: For following products, from ICC-ES:

1. Preservative-treated plywood.

2. Fire-retardant-treated plywood.

1.05 QUALITY ASSURANCE

A. Testing Agency Qualifications: For testing agency providing classification marking for fireretardant-treated material, an inspection agency acceptable to authorities having jurisdiction that periodically performs inspections to verify that the material bearing the classification marking is representative of the material tested.

1.06 DELIVERY, STORAGE AND HANDLING

A. Stack sheathing panels flat with spacers between each bundle to provide air circulation. Provide for air circulation around stacks and under coverings.

PART 2 - PRODUCTS

2.01 PERFORMANCE REQUIREMENTS

A. Fire-Test-Response Characteristics: For assemblies with fire-resistance ratings, provide materials and construction identical to those of assemblies tested for fire resistance per ASTM E119 by a testing and inspecting agency acceptable to authorities having jurisdiction.

1. Fire-Resistance Ratings: Indicated by design designations from UL's "Fire Resistance Directory".

2.02 WOOD PANEL PRODUCTS

A. Plywood: Refer to section 06 10 00 - ROUGH CARPENTRY.

B. Factory mark panels to indicate compliance with applicable standard.

2.03 FIRE-RETARDANT-TREATED PLYWOOD

A. General: Where plywood is indicated, use fire-retardant treated materials complying with requirements in

this article that are acceptable to authorities having jurisdiction and with fire-fest-response characteristics specified as determined by testing identical products per test method indicated by a qualified testing agency.

B. Fire-Retardant-Treated Plywood: refer to section 06 10 00 - ROUGH CARPENTRY.

C. Identify fire-retardant-treated plywood with appropriate classification marking of qualified testing agency.

D. Application: Treat all plywood unless otherwise indicated.

2.04 WALL SHEATHING

A. Plywood Wall Sheathing:

1. Span Rating: Not less than 16/0.

2. Nominal Thickness: As indicated but not less than 1/2 inch.

B. Cementitious Backer Units: ASTM C 1325, Type A.

1. Manufacturers: Subject to compliance with requirements, available manufacturers offering products that may be incorporated into the Work include, but are not limited to the following:

a. United States Gypsum Company.

2. Thickness: 5/8 inch or as indicated.

2.05 MISCELLANEOUS MATERIALS

A. Adhesives for Field Gluing Panels to Framing: Formulation complying with APA AFG-01 and ASTM D 3498 that is approved for use with type of construction panel indicated by manufacturers of both adhesives and panels.

PART 3 - EXECUTION

3.01 INSTALLATION, GENERAL

A. Do not use materials with defects that impair quality of sheathing or pieces that are too small to use with minimum number of joints or optimum joint arrangement. Arrange joints so that pieces do not span between fewer than three support members.

B. Cut panels at penetrations, edges, and other obstructions of work; fit tightly against abutting construction unless otherwise indicated.

C. Securely attach to substrate by fastening as indicated, complying with the following:

1. NES NER-272 for power-driven fasteners.

2. Table 2304.9.1, "Fastening Schedule," in ICC's "International Building Code."

3. Table R602.3(1), "Fastener Schedule for Structural Members," and Table R602.3(2), "Alternate Attachments," in ICC's "international Residential Code for One- and Two-Family Dwellings."

D. Coordinate wall roof sheathing installation with flashing and joint-sealant installation so these materials are installed in sequence and manner that prevent exterior moisture from passing through completed assembly.

E. Do not bridge building expansion joints; cut and space edges of panels to match spacing of structural support elements.

F. Coordinate sheathing installation with installation of materials installed over sheathing so sheathing is not exposed to precipitation or left exposed at end of the workday when rain is forecast.

3.02 CEMENTITIOUS BACKER UNIT INSTALLATION

A. Install panels and treat joints according to ANSI A108.11 and manufacturer's written instructions for type of application indicated.

END OF SECTION

PART 1 - GENERAL

1.01 RELATED DOCUMENTS

A. Drawings and general provisions of the Contract, including General and Supplementary Conditions and Division 1 Specification Sections, apply to this Section.

1.02 SUMMARY

A. Description of Work: Work of this Section includes, but is not limited to, the following:

1. Standing and running wood trim and wall base.
2. Cabinetry with plastic laminate finish and related hardware unless noted otherwise.
3. Countertops/backsplashes with solid surface material finish.
4. Countertops with plastic laminate finish.
5. Wood doors & door heads/jambs with field applied paint finish.
6. Shelving, including adjustable shelving, closet shelving and rods, for field-painted finish.
7. Framing, blocking and furring in conjunction with above.
8. Accessories.
9. Finishing and installation in conjunction with above.

B. Coordinate scope of Work with items identified in Section 06 41 00 - Architectural Wood Casework.

C. Labeling by manufacturers where visible to occupants is prohibited except where required by Federal law.

1.03 REQUIRED WORK OF THIS SECTION SPECIFIED ELSEWHERE

A. See Section 06 41 00 - Architectural Wood Casework for countertops and backsplashes.

1.04 RELATED WORK SPECIFIED ELSEWHERE

A. Section 05 50 00 - Metal Fabrications for miscellaneous metal framing and supports.

B. Section 06 10 00 - Rough Carpentry for blocking, nailers and furring in partitions.

C. Section 06 41 00 - Architectural Wood Casework for cabinetry and millwork not in this Section.

D. Section 08 14 00 - Flush Wood Doors for wood door requirements.

E. Section 08 71 00 - Door Hardware, for hardware specifications.

F. Section 09 91 00 - Painting for field applied painting systems.

G. Mechanical Drawings for plumbing fixtures and connection requirements.

H. Electrical Drawings for light fixtures and electrical connection requirements.

1.05 REFERENCE STANDARDS

(Current Edition at Date of Bid)

A. Comply with the following in accordance with Section 01 42 00 - References.

1. American National Standards Institute (ANSI).
   a. A 208.1 Wood Particleboard.
2. American Plywood Association (APA).
   a. Product Guide: Performance-Rated panels.
3. American Society for Testing and Materials (ASTM)
   a. D 1037 Standard Methods of Evaluating the Properties of Wood-Base Fiber and Particle Panel Materials.
4. Architectural Woodwork Institute (AWI)
   a. Architectural Woodwork Quality Standards, Guide Specifications and Quality Certification Program, Fifth Edition.
5. National Electrical Manufacturers Association (NEMA)
   a. LD 3 High-Pressure Decorative Laminates
6. National Institute of Standards and Technology, Department of Commerce, Product Standard (PS)
   a. Construction and Industrial Plywood.

b. (20) American Softwood Lumber Standard

c. (51) Hardwood and Decorative Plywood

1.06 SUBMITTALS

A. Shop Drawings:

1. Shop Drawings – Submit Shop Drawings of woodwork showing location of each item, dimensioned plans and elevations, large scale details, joints, sections, connections to adjacent Work and finishes.

2. Include details of framing, blocking, and furring and connections to adjacent Work. Show fabrication plans, elevations, details, finishes and installation details, types of materials and finish, anchors, fastenings, hardware, and framing required for proper installation of the Work.

3. Include hardware schedule and technical data for cabinet hardware.

B. Samples:

1. Plastic laminate: Submit samples for each specified color and texture.

2. Cabinetry and finish carpentry items: Submit samples showing construction, finish, color, sheen and edge material for the following:

a. Solid surface material countertop: 12 inch x 12 inch x thickness of top.

b. Plastic laminate countertop with edge trim piece: 12 inch x 12 inch x thickness of countertop.

C. Qualification Data: Submit woodwork manufacturer qualifications verifying years of experience; include list of completed projects having similar scope of work identified by name, location, date, reference names and phone numbers.

1.07 DEFINITIONS

A. Wood Painted, Painted Wood: Terms used on Drawings to indicate wood items to be field painted.

B. Exposed Surfaces: Surfaces visible when doors and drawers are closed; bottoms of casework more than 4'-0" above finished floor, backs of hinged doors and edges of hinged doors exposed when opened.

C. Semi-Exposed Surfaces: Surfaces that become visible when drawers and doors are opened, tops of cases 6'-6" or more above finished floor.

D. Concealed Surfaces: Surfaces not visible after installation.

1.08 SYSTEM REQUIREMENTS

A. Interface with Other Systems:

1. Fire Resistance Requirements: Treat those items required to be treated by authorities having jurisdiction over Work, and those items indicated as “Fire Retardant Treated Wood.”

2. Coordinate Work with that of other trades affected by this installation.

3. Coordinate with electrical, plumbing and other fixtures mounted within, or adjacent to woodwork and requiring access. Provide required openings using manufacturer's templates and field measurements to verify actual installed locations and dimensions.

1.09 QUALITY ASSURANCE

A. Woodwork shall be installed by fabricator.

B. Reference Standards: Comply with applicable provisions of AWI "Architectural Woodwork Quality Standards".

1.10 PRE-INSTALLATION CONFERENCE

A. Prior to commencing Work, at Contractor's direction, meet at site and review installation procedures and coordination with other Work.

B. Attendees: Fabricator, installer and installers responsible for adjacent Work.

1.11 DELIVERY, STORAGE AND HANDLING

A. Deliver finish carpentry Work to building after concrete, masonry and other Work involving wet materials have been completed for at least 10 days, when areas are ready to receive Work, and only after temperature has been stabilized in installation areas at approximate level which will prevail in building when occupied.

B. Protect finish carpentry Work against damage during handling, transit and storage.

C. Store in dry, clean, well ventilated place, protected from dampness, moisture and weather.

D. Stack in accordance with manufacturer's instructions.

E. Do not drag units across each other or across other surfaces.

1.12 PROJECT CONDITIONS

A. Verify dimensions before proceeding and obtain measurements at job site for Work required to be accurately fitted to other construction.

1. Measurements shall be accurate so that finished Work is precisely assembled and fitted.
2. Verify locations of concealed blocking, nailers and furring that support finish carpentry, before partitions are enclosed.
3. Record measurements on final Shop Drawings.

B. Remedy unsatisfactory tolerances in adjoining Work.

C. Proceed with finish carpentry Work only after substrate construction and penetrating Work have been completed.

D. Environmental Requirements:

1. Obtain temperature and humidity requirements for woodwork installation and storage areas from woodwork manufacturer.
2. Test environment to determine range of temperature and humidity levels over a typical 24 hour period for all areas to receive millwork. Retain test results for record.
3. Do not install woodwork until required temperature and relative humidity have been stabilized and will be maintained in installation areas.
4. Maintain temperature and humidity in installation area as required to maintain moisture content of installed woodwork within 1.0 percent tolerance of optimum moisture content, from date of installation through remainder of construction period.

PART 2 - PRODUCTS

2.01 MATERIALS

A. Lumber

1. Lumber Size references, unless otherwise specified, are nominal sizes, and actual sizes shall be within manufacturing tolerances allowed by the standard under which product is produced.

B. Hardwood Solid Stock:

1. General: Comply with AWI 100 lumber grading rules for PREMIUM GRADE Work. Provide lumber surfaced four sides (S4S) and work to patterns indicated.
2. Stained Interior Wood Trim and Millwork: Species as shown below, solid lumber stock, sizes and shapes shown on Drawings, of grain type sufficient to receive stained finish, smooth surfaced.
   a. Red Oak - "Select White" (Sapwood), plain (flat) sliced, book match, Grade 1.
3. Hardwood for field-applied paint finish: Popular species, plain sawn, maximum moisture content of 6 percent.

C. Softwood Lumber:

1. Concealed blocking for finished carpentry: Douglas fir "C Select"; or equivalent WWPA softwood or better.
2. Exposed blocking or blocking within walls: No. 1 Common; Douglas fir or Southern pine.
3. Provide kiln dried lumber with average moisture content of 6% to 11%.

D. Plywood:

1. Core material for use under plastic laminate:
   a. Hardwood plywood with balanced 7-ply veneer plywood construction. Use balancing grades of veneer on back of wood cores to balance face veneer and equalize pull.
2. Interior:
   a. A-A INT-Exterior glue, Douglas Fir; applications where both sides exposed to view.
   b. A-B INT-Exterior glue, Douglas Fir; applications where one side exposed to view.
   c. B-D INT-Exterior glue, Douglas Fir; applications where plywood will be backing for other materials such as carpeting.
   d. Any plywood used for mounting of telephone or electronic equipment shall be fire proof treated.

E. Medium-Density Fiberboard (MDF): ANSI A208.2, Grade 130. Thickness as indicated.

F. Hardboard: AHA A135.4; Pressed wood fiber with resin binder, Class 1 - Tempered, 1/4 inch (6 mm) thick, smooth two sides (S2S); use for dust panels and other components indicated on drawings.

G. Stainless Steel: ASTM A167, Type 302 or 304. 16 gage, 0.06 inch nominal sheet thickness.

1. Finish: 4B satin brushed finish.

H. Cast Aluminum: ASTM B26.

I. Extruded Aluminum: ASTM B221.

J. Solid-Surfacing Material: Homogeneous solid sheets of filled plastic resin complying with ISSFA-2 and NEMA LD.

1. Acrylic or polyester resin, mineral filler, and pigments; homogenous, non-porous and capable of being worked and repaired using standard woodworking tools; no surface coating; color and pattern consistent throughout thickness.

a. Finish on Exposed Surfaces: Semi-gloss, gloss rating of 25 to 50.

b. Color and Pattern: As selected by Architect from manufacturer's full line.

2. Products: Subject to compliance with requirements, provide one of the following:

a. E.I. du Pont de Nemours and Company; Corian.
www2.dupont.com/Corian_Global_Landing/en_US/index.htm

b. Formica Corporation; Solid Surfacing.
www.formica.com

c. Wilsonart International; Division of Premark International, Inc.; Gibraltar.
www.wilsonart.com

d. Avonite Surfaces.
www.avonitesurfaces.com

3. Type: Standard type.

4. Thickness: for countertop, 3/4 inch, minimum. Other Components thickness: 1/2 inch, minimum.

2.02 FIRE-RETARDANT-TREATED MATERIALS

A. General: Where fire-retardant-treated materials are indicated, use materials impregnated with fire-retardant chemicals by a pressure process or other means acceptable to authorities having jurisdiction to produce products with the following fire-test-response characteristics, when tested according to ASTM E84.

1. Flame-spread index of not greater than 25.

2. Smoke-developed index of not greater than 25.

B. For exposed items indicated to receive transparent finish, do not use chemical formulations that contain colorants or that bleed through or otherwise adversely affect finishes.

C. Interior, Low-Hygroscopic Type, Fire-Retardant Treatment: Formulation that results in treated material with an apparent moisture content of not more than 28 percent when tested according to ASTM D 3201 at 92 percent relative humidity.

D. Mill lumber before treatment and implement special procedures during treatment and drying processes that prevent lumber and plywood from warping and developing discolorations from drying sticks or other causes, marring, and other defects affecting appearance of treated woodwork.

E. Kiln-dry material after treatment to levels required for untreated material. Do not use material that does not comply with requirements for untreated material or is warped or discolored.

2.03 MISCELLANEOUS MATERIALS

A. Fasteners for Exterior Finish Carpentry: Provide nails or screws of the following materials, in sufficient length to penetrate minimum of 1-1/2 inches into substrate, unless otherwise recommended by manufacturer:

1. Stainless steel.

2. Hot-dip galvanized steel.

B. Fasteners for Interior Finish Carpentry: Nails, screws, and other anchoring devices of type, size, material, and finish required for application indicated to provide secure attachment, concealed where possible.

1. Where finish carpentry materials are exposed in areas of high humidity, provide fasteners and anchorages with hot-dip galvanized coating complying with ASTM A153.

C. Paneling Adhesives: Comply with paneling manufacturer's written recommendations for adhesives.

D. Panel Mounting Clips: Two-piece extruded aluminum mounting hardware designed for concealed installation at backside of paneling.

1. Product: Subject to compliance with requirements, provide the following:

a. Brooklyn Hardware, LLC; Panelclip.

E. Glue: Aliphatic-resin or phenolic-resin wood glue recommended by manufacturer for general carpentry use.

F. Flashing: Comply with requirements of Section 07 62 00 - Sheet Metal and Flashing and Trim for flashing materials installed in finish carpentry.

G. Sealants: Comply with requirements of Section 07 92 00 - Joint Sealants for materials required for sealing exterior finish carpentry work.

2.04 FABRICATION

A. General:

1. Comply with referenced AWI standards.

2. Provide details and profiles indicated.

3. Fabricate units rigid, neat, free from defects, warp or buckle in accordance with final Shop Drawings.

4. Provide factory cutouts for openings in units as required to receive associated work.

5. Premachine units at factory to receive hardware using hardware manufacturer's templates.

6. Assemble units at factory and disassemble only as required for shipping to site. Accurately mark units for assembly at site.

7. Wood Moisture Content: Comply with requirements of specified inspection agencies and with manufacturer's written recommendations for moisture content of finish carpentry at relative humidity conditions existing during time of fabrication and in installation areas.

B. Trim and Bases:

1. Comply with AWI 300, Custom Grade.

2. Fabricate from one of the following:

a. Hardwood solid stock for field-applied paint finish.

b. Groove or kerf backs of flat trim. Do not let grooves and kerfs show on exposed ends of finished Work.

C. Panels for Ceiling Access Panels: Fabricate from MDF.

2.05 SHOP FINISHING

A. Shop Priming:

1. Apply sealer and first finish coat on surfaces requiring field finishing, except millwork requiring field fabrication.

2. Back paint concealed surfaces with one coat of oil base wood primer.

3. At Contractor's option, provide complete factory finishing. See Division 09 Section PAINTING AND FINISHING for field painting and finishing.

B. Shop Finish:

1. Provide molded units with manufacturer’s standard primed finish to receive field applied coating.

a. Field Applied Coating: Refer to Division 09 Section PAINTING AND FINISHING for materials.

PART 3 - EXECUTION

3.01 EXAMINATION

A. Examine substrates and adjoining construction, and conditions under which Work will be installed. Do not proceed with installation until unsatisfactory conditions have been corrected.

3.02 PREPARATION

A. Blocking and Furring:

1. Provide surface-mounted wood blocking, nailers, furring and grounds on partitions, located as required for wall-hung cabinetry and other wall-hung items, whether or not such blocking and similar items are indicated on drawings.

2. See Section 06 10 00 - Rough Carpentry for installation of blocking and furring within partitions,

ie. below gypsum board.

3. Coordinate with Section 09 21 16.23 - Gypsum Board Shaft Wall Assemblies.

B. Clean substrates of projections and substances detrimental to application.

C. Condition finish carpentry to average prevailing humidity conditions in installation areas before installation, for a minimum of 24 hours unless longer conditioning is recommended by manufacturer.

D. Prime and back prime lumber for painted finish exposed on the exterior not indicated as factory prefinished. Comply with requirements for surface preparation and application in Section 09 91 00 - Painting.

E. Where finish carpentry materials to be painted are exposed in interior areas of high humidity, prime all faces and edges.

3.03 INSTALLATION

A. General:

1. Install work in accordance with AWI/AWMAC/WI Architectural Woodwork Standards requirements for grade indicated.

2. Install in accordance with final Shop Drawings and manufacturer's instructions.

3. Install Work plumb, level, true, and straight with no distortions. Aligned with adjacent materials. Use concealed shims where necessary for alignment.

a. Install to a tolerance of 1/8" in 8'-0" for plumb and level countertops; and with 1/16" maximum offset in flush adjoining 1/8" maximum offsets in revealed adjoining surfaces.

b. Install to tolerance of 1/8 inch in 96 inches for level and plumb. Install adjoining finish carpentry with 1/32 inch maximum offset for flush installation and 1/16 inch maximum offset for reveal installation.

c. Scribe and cut finish carpentry to fit adjoining work. Refinish and seal cuts as recommended by manufacturer.

d. Countersink fasteners, fill surface flush, and sand where face fastening is unavoidable.

4. Assemble and install Work without machine and tool marks.

5. Neatly fit and scribe Work to adjacent surfaces.

6. Do not use materials that are unsound, warped, improperly treated or finished, inadequately seasoned, or too small to fabricate with proper jointing arrangements.

a. Do not use manufactured units with defective surfaces, sizes, or patterns.

7. Coordinate finish carpentry with materials and systems in or adjacent to it. Provide cutouts for mechanical and electrical items that penetrate finish carpentry.

B. Ceiling Access Panels: Install in gypsum board ceilings as indicated on Drawings.

C. Standing and running trim

1. Install with minimum number of joints practical, using full-length pieces from maximum lengths of lumber available. Do not use pieces less than 36 inches long, except where necessary. Stagger joints in adjacent and related standing and running trim. Cope at returns and miter at corners to produce tight-fitting joints with full-surface contact throughout length of joint. Use scarf joints for end-to-end joints. Plane backs of casings to provide uniform thickness across joints, where necessary for alignment.

a. Match color and grain pattern across joints.

b. Install trim after gypsum board joint finishing operations are completed.

c. Fill gaps, if any, between top of base and wall with plastic wood filler, sand smooth, and finish same as wood base if finished.

d. Drill pilot holes in hardwood before fastening to prevent splitting. Fasten to prevent movement or warping. Countersink fastener heads on exposed carpentry work and fill holes.

e. Fit exterior joints to exclude water. Apply flat grain lumber with bark side exposed to the weather.

D. Paneling Instillation

1. Paneling: Select and arrange panels on each wall to minimize noticeable variations in grain character and color between adjacent panels. Install with uniform tight joints between panels in accordance with WI recommendations for specified grade.

a. Attach panels to supports with concealed mounting clips and manufacturer's

recommended panel adhesive. Space fasteners as recommended by panel and mounting clip manufacturer.

b. Provide the following joints at corners:

1). Outside corners: Flush butt joint with edge banding.

2). Inside corners: Butt joint.

3.04 ADJUSTING AND REPAIR

A. Before completion of Work, adjust hardware until components operate properly.

B. Replace defective, damaged, missing or stolen hardware.

C. Touch-up marred finishes, including shop primers to match adjacent surfaces.

D. Remove and replace units which are warped, bowed, not properly fitted or finished or otherwise damaged.

3.05 CLEANING AND PROTECTION

A. Clean Work upon completion.

B. Protect units during construction so that they will be without any evidence of damage or use at time of acceptance.

END OF SECTION

PART 1 - GENERAL

1.01 RELATED DOCUMENTS

A. Drawings and general provisions of the Contract, including General and Supplementary Conditions and Division 1 Specification Sections, apply to this Section.

1.02 SECTION INCLUDES

A. Specially fabricated cabinet units.

B. Cabinet hardware.

C. Preparation for site finishing.

D. Preparation for installing utilities.

1.03 RELATED REQUIREMENTS

A. Section 01 61 16 - Volatile Organic Compound (VOC) Content Restrictions.

B. Section 06 10 00 - Rough Carpentry: Support framing, grounds, and concealed blocking.

C. Section 06 20 00 - Finish Carpentry.

D. Section 09 91 00 - Painting: Site finishing of cabinet exterior.

1.04 REFERENCE STANDARDS

(Current Edition at Date of Bid)

A. ANSI A135.4 - American National Standard for Basic Hardboard.

B. ANSI A208.1 - American National Standard for Particleboard.

C. ANSI A208.2 - American National Standard for Medium Density Fiberboard for Interior Use.

D. AWI (QCP) - Quality Certification Program, www.awiqcp.org; current edition at www.awiqcp.org.

E. AWI/AWMAC/WI (AWS) - Architectural Woodwork Standards.

F. AWMAC (GIS) - Guarantee and Inspection Services Program; current edition at www.awmac.com/gis.php.

G. BHMA A156.9 - American National Standard for Cabinet Hardware; Builders Hardware Manufacturers Association; (ANSI/BHMA A156.9).

H. GSA CID A-A-1936 - Adhesive, Contact, Neoprene Rubber; Federal Specifications and Standards.

I. HPVA HP-1 - American National Standard for Hardwood and Decorative Plywood; Hardwood Plywood & Veneer Association; (ANSI/HPVA HP-1).

J. NEMA LD 3 - High-Pressure Decorative Laminates; National Electrical Manufacturers Association.

K. NHLA G-101 - Rules for the Measurement & Inspection of Hardwood & Cypress; National Hardwood Lumber Association.

L. PS 1 - Structural Plywood.

M. PS 20 - American Softwood Lumber Standard; National Institute of Standards and Technology (Department of Commerce).

N. WI (CCP) - Certified Compliance Program (CCP); current edition at

www.woodworkinstitute.com/certification.

O. WI (MCP) - Monitored Compliance Program (MCP); current edition at

www.woodworkinstitute.com/certification.

P. WI (MAN) - Manual of Millwork; Woodwork Institute; 2003.

1.05 ADMINISTRATIVE REQUIREMENTS

A. Preinstallation Meeting: Convene a preinstallation meeting not less than one week before starting work of this section; require attendance by all affected installers.

1.06 SUBMITTALS

A. See Section 01 33 00 - Submittals Procedures, for submittal procedures.

B. Shop Drawings: Indicate materials, component profiles, fastening methods, jointing details, and accessories.

1. Minimum Scale of Detail Drawings: 1-1/2 inch to 1 foot (1:8).

2. Provide the information required by AWI/AWMAC/WI Architectural Woodwork Standards.

3. Show locations and sizes of concealed blocking specified in other Sections.

4. Show locations for plumbing fixtures and other items installed in architectural woodwork.

C. Product Data: Provide data for hardware accessories.

D. Product Data: Samples for initial selection purposes of the following in form of manufacturer's color charts consisting of actual units or sections of units showing full range of colors, textures, and patterns available for each type of material indicated.

1. Plastic laminate

2. Solid Surfacing

3. Stainless steel

4. Cabinet liner material

E. Samples: Submit actual samples of architectural cabinet construction, minimum12 inches square, illustrating proposed cabinet and shelf unit substrate and finish.

F. Samples: Submit actual sample items of proposed pulls, hinges, shelf standards, and locksets, demonstrating hardware design, quality, and finish.

1.07 QUALITY ASSURANCE

A. Fabricator Qualifications: Company specializing in fabricating the products specified in this section with minimum five years of documented experience. Practicing standards of the Architectural Woodwork Institute (AWI) or the Architectural Woodwork Association of Canada (AWMAC) and familiar with the AWI/AWMAC QSI.

B. Installer Qualifications: Company specializing in installation of the products specified in this section with minimum three years of documented experience.

C. Single-Source Manufacturing and Installation Responsibility: Engage a qualified woodworking firm to assume undivided responsibility for casework specified in this Section, including fabrication, installation, and finishing if specified.

D. Quality Standard: Unless otherwise indicated, comply with the “Architectural Woodwork Standards” (1st Edition, 2009) for grades of interior architectural woodwork indicated for construction, finishes, installation, and other requirements.

1. The Contract Documents may contain selections chosen from options in the quality standard and additional requirements beyond those of the quality standard. Comply with such selections and requirements in addition to the quality standard.

2. If, for any reason, an inspection is requested of Work required to be manufactured in accordance with the " Architectural Woodwork Standards ", and for which a fee is charged, said fee (if millwork is found to be non-conforming in any manner) shall be the responsibility of the Contractor and subsequently deducted from the contract price in form of a deductive change order.

1.08 MOCK-UP

A. Provide mock-up of typical base cabinet, wall cabinet, and countertop, including hardware, finishes, and plumbing accessories.

B. Locate where directed.

C. Mock-up may remain as part of the Work.

1.09 DELIVERY, STORAGE, AND HANDLING

A. Protect units from moisture damage.

B. Protect woodwork during transit, delivery, storage, and handling to prevent damage, soilage, and deterioration.

C. Do not deliver woodwork until painting, wet work, grinding, and similar operations have been completed in installation areas.

1.10 FIELD CONDITIONS

A. During and after installation of custom cabinets, maintain temperature and humidity conditions in building spaces at same levels planned for occupancy.

1. Building shall be enclosed, wet work shall be complete, and HVAC system shall be operating and maintaining temperature and relative humidity at occupancy levels during the remainder of the construction period.

B. Field Measurements: Where woodwork is indicated to be fitted to other construction, check actual

dimensions of other construction by accurate field measurements before manufacturing woodwork; show recorded measurements on shop drawings. Coordinate manufacturing schedule with construction progress to avoid delay of Work.

1. Where field measurements cannot be made without delaying the Work, guarantee dimensions and proceed with manufacture of woodwork without field measurements. Coordinate other construction to ensure that actual dimensions correspond to guaranteed dimensions.

PART 2 - PRODUCTS

2.01 MATERIALS

A. As indicated in drawings and see section 06 20 00 - Finish Carpentry for materials definition.

2.02 CABINETS

A. Quality Grade: Unless otherwise indicated provide products of quality specified by AWI/AWMAC/WI Architectural Woodwork Standards for Custom Grade.

B. Wood Cabinets:

1. Exposed Surfaces:
    a. Door Body: Solid-hardwood
    b. Grain Direction: Vertically for drawer fronts, doors, and fixed panels.
    c. Matching of Leaves: Book match.
    d. Matching within Panel Face: Running match.
    e. Finish: Stain
    f. Color: As selected by Architect from the manufacturer standard line if not indicated on drawings
2. Semi-exposed Surfaces:
    a. Drawer Body, Sides and Backs: Solid-hardwood lumber.
    b. Drawer Bottoms: Hardwood plywood.
    c. Adjustable Shelving: Hardwood plywood with 1/4”solid wood edge.
3. Type of Construction: Face Frame.
4. Cabinet Style: Standard overlay.
5. Cabinet Doors and Drawer Fronts: Shaker style, 3/4” one piece solid wood
6. Provide dust panels above compartments and drawers, unless located directly under tops.

2.03 WOOD-BASED COMPONENTS

A. Wood fabricated from old growth timber is not permitted.

B. General: Provide materials that comply with requirements of Architectural Woodwork Standard for each type of woodwork and quality grade specified, unless otherwise indicated.

C. Medium Density Fiberboard (MDF): Use for concealed components.

D. Softwood Plywood: thickness as indicated, use where indicated.

E. Hardboard: use for dust panels and other components indicated on drawings.

2.04 SOLID SURFACING COUNTERTOP

A. Provide specific types as scheduled.

B. Flat Sheet Thickness: 1/2 inch, minimum.

C. Exposed Edge Treatment: square top and bottom, substrate built up to minimum1-1/2 inch thick or as indicated on drawings.

D. Back and End Splashes: Same material, same construction.

2.05 STAINLESS STEEL

A. Provide specific types as scheduled.

B. Exposed Edge Shape: Bullnose with return; 5/8 inch radius, return to face of case; reinforced with hardwood or steel.

C. Back and End Splashes: Same material; welded1/4 inch radius coved joint to countertop; square top edge with1 inch wide top surface and minimum1/2 inch turndown;

D. Splash Dimensions: 4 inch high by1 inch thick, unless otherwise indicated.

2.06 CABINET HARDWARE AND ACCESSORIES

A. General: Provide cabinet hardware and accessory materials associated with architectural cabinets, except for items which are specified in Section 08 71 00 - Door Hardware.

B. Hardware: BHMA A156.9, types as scheduled or indicated for quality grade specified.

1. Exposed Hardware Finishes: For exposed hardware, provide finish that complies with BHMA A156.18 for BHMA finish number indicated.

a. Satin Chromium Plated: BHMA 626 for brass or bronze base; BHMA 652 for steel base.

C. Adjustable Shelf Supports: Standard side-mounted system using multiple holes for pin supports and coordinated self-rests, satin chrome finish, for nominal 1 inch (25 mm) spacing adjustments.

D. Drawer and Door Pulls: Bar pull, Satin Nickel finish, Emtek 86362 or equal.

E. Cabinet Locks: Keyed cylinder, two keys per lock, master keyed, steel with satin finish.

1. Product: For Swing Doors - C8053-14A with two keys, trim washer, spur washer (for wood) or flat washer (for metal), mounting nut and two cams; maximum 7/8 inch (22 mm) thick material, manufactured by CompX National or equal: www.compx.com.

2. Product: For Drawers - C8053-14A with two keys, trim washer, spur washer (for wood) or flat washer (for metal), mounting nut and two cams; maximum 7/8 inch (22 mm) thick material; cam stop at 12 o'clock. manufactured by CompX National or equal: www.compx.com

3. Keying: Key each lock in a room the same. Key different rooms differently.

F. Catches: Magnetic.

1. Provide where required or indicated on drawings

G. Drawer Slides:

1. Type: Full extension.

2. Static Load Capacity: Heavy Duty grade, 150 pound static load minimum.

3. Mounting: Side mounted.

4. Stops: Integral type.

5. Features: Provide soft-closing/stay closed type.

6. Manufacturers:

a. Grass America Inc; Product 5300: www.grassusa.com.

b. Julius Blum, Inc.; Product 430E Series: www.blum.com.

c. Substitutions: See Section 01 25 00 - Substitutions Procedures.

H. Hinges: Concealed hinge with 108 degree opening and full overlay, one pair for each leaf minimum, additional hinges as required for size and weight of door per manufacturer's recommendations, self-closing type, metal hinge, nickel plated.

1. Manufacturers:

a. Grass America Inc; Product TEC 864 Hinge with UniSoft adapter, Wing Base Plate and screws as recommended by manufacturer: www.grassusa.com.

b. Substitutions: See Section 01 25 00 - Substitutions Procedures.

I. Brackets: Angle wall bracket, 1000 pound (453 Kg) minimum load limit, longest size to fit countertop and wall, with mounting holes, 45 degree notch in corner for wall cleat, powder coat finish to be selected from manufacturer's standard colors.

1. Manufacturers:

a. A & M Hardware; Product Work Station Bracket.
www.aandmhardware.com

b. Substitutions: See Section 01 25 00 - Substitution Procedures.

J. Provide Clear Plastic Door and Drawer Bumpers:

2.07 MISCELLANEOUS MATERIALS

A. Furring, Blocking, Shims, and Hanging Strips: Softwood or hardwood lumber, kiln dried to less than 15 percent moisture content.

B. Anchors: As indicated on Drawings, or if not indicated, select material type, size, and finish required for each substrate for secure anchorage. Provide nonferrous-metal or hot-dip galvanized anchors and inserts on inside face of exterior walls and elsewhere as required for corrosion-resistance. Provide toothed-steel or lead expansion sleeves for drilled-in-place anchors.

C. Adhesives, General: Do not use adhesives that contain urea formaldehyde.

1. VOC Content of Adhesives: Provide adhesives that comply with local regulatory limits for VOC content when calculated according to 40 CFR, Part 59, Subpart D (EPA Method 24).

D. Joint Sealant: Single-component, non-sag, paintable joint sealant complying with ASTM C 920 classifications as follows:

1. Type: S (single component).

2. Grade: NS (nonsag).

3. Class: 12.5.

4. VOC Content of Interior Sealants: Provide sealants and sealant primers for use inside the weatherproofing system that comply with local regulatory limits for VOC content when calculated according to 40 CFR, Part 59, Subpart D (EPA Method 24).

E. Metal Fabrications: Steel plate, ASTM A36; thicknesses as indicated; ground all welds smooth; dimensions as indicated.

1. Anchorage Clips: Bent plate.

2. Connection Bracket at End of Sliding Markerboard Tracks: Welded construction.

2.08 FABRICATION, GENERAL

A. Assembly: Shop assemble cabinets for delivery to site in units to the maximum extent possible and to permit passage through building openings.

1. Disassemble components only as necessary for shipment and installation. Where necessary for fitting at site, provide ample allowance for scribing, trimming, and fitting.

B. Edging: Fit shelves, doors, and exposed edges with specified edging. Do not use more than one piece for any single length.

C. Wood Moisture Content: Comply with requirements of referenced quality standard for wood moisture content in relation to ambient relative humidity during fabrication and in installation areas.

D. Edges: Ease edges to radius indicated for the following:

1. Corners of cabinets and edges of solid wood (lumber) members less than 1 inch (1.6 mm) in nominal thickness: 1/16 inch (1.6 mm).

2. Edges of rails and similar members more than 1 inch (25.4 mm) in nominal thickness: 1/8 inch (3.2 mm).

E. Fitting: When necessary to cut and fit on site, provide materials with ample allowance for cutting. Provide matching trim for scribing and site cutting.

F. Dovetail joints are not to be used for particle board construction.

G. Shelving thickness as follows:

1. 3/4 inch (19 mm) to a maximum span of 32 inch (813 mm), unless noted otherwise.

2. 1 inch (25.4 mm) for spans over 32 inch (813 mm).

H. Plastic Laminate: Apply plastic laminate finish in full uninterrupted sheets consistent with manufactured sizes. Fit corners and joints hairline; secure with concealed fasteners. Locate counter butt joints minimum 2 feet (600 mm) from sink cut-outs.

1. Apply laminate backing sheet to reverse side of plastic laminate finished surfaces.

2. Cap exposed or semi-exposed plastic laminate finish edges with plastic trim.

I. Provide cutouts for plumbing fixtures, inserts, appliances, outlet boxes, and fixtures and fittings. Verify locations of cutouts from on-site dimensions. Seal cut edges.

J. Shop glaze glass materials using the Interior Dry method specified in Section 08 80 00.

PART 3 - EXECUTION

3.01 PREPARATION

A. Before installation, condition casework to average prevailing humidity conditions in installation areas.

B. Before installing architectural casework, examine shop-fabricated work for completion and complete work as required, including removal of packing and back priming.

C. Verify adequacy of backing and support framing.

D. Verify location and sizes of utility rough-in associated with work of this section.

3.02 INSTALLATION

A. Install woodwork to comply with AWI/AWMAC Architectural Woodwork Quality Standards for the same grade specified in Part 2 for fabrication of type of woodwork involved.

B. Assemble casework and complete fabrication at Project site to comply with requirements for fabrication in Part 2, to extent that it was not completed in the shop.

C. Install casework level, plumb, true, and straight. Shim as required with concealed shims. Install level and plumb (including tops) to a tolerance of 1/8 inch in 96 inches.

D. Scribe and cut casework to fit adjoining work, and refinish cut surfaces and repair damaged finish at cuts.

E. Anchor casework to anchors or backing built in or directly attached to substrates. Secure with countersunk, concealed fasteners and blind nailing as required for complete installation. Use fine finishing nails for exposed fastening, countersunk and filled flush with casework and matching final finish where transparent finish is indicated.

F. Cabinets: Install without distortion so doors and drawers fit openings properly and are accurately aligned. Adjust hardware to center doors and drawers in openings and to provide unencumbered operation. Complete installation of hardware and accessory items as indicated.

1. Install cabinets with no more than 1/8 inch in 96 inch sag, bow, or other variation from a straight line.

2. Maintain veneer sequence matching of cabinets with transparent finish.

3. Fasten wall cabinets through back, near top and bottom, at ends and not more than 16 inches on center with No. 12 screws sized for 1-1/2-inch penetration into wood framing, blocking, or hanging strips, or No. 12 sheet metal screws through metal backing or metal framing behind wall finish.

G. Countertops: Anchor securely to base cabinets or other supports as indicated.

1. Anchor plastic laminate countertops by screwing through corner blocks of base cabinets or other supports into underside of countertop.

2. Anchor solid-surfacing material countertops to base cabinets using adhesive recommended in writing by manufacturer. Align adjacent solid-surfacing material countertops and form seams to comply with manufacturer's written recommendations and referenced quality standard using adhesive in color to match countertop. Carefully dress joints smooth, remove surface scratches, and clean entire surface.

3. Install countertops with no more than 1/8 inch in 96 inches sag, bow, or other variation from a straight line.

4. Seal space between backsplash and wall with joint sealant.

H. Touch up finishing work specified in this Section after installation of casework. Fill nail holes with matching filler where exposed.

3.03 ADJUSTING AND CLEANING

A. Repair damaged and defective casework, where possible, to eliminate functional and visual defects; where not possible to repair, replace casework. Adjust joinery for uniform appearance.

B. Clean, lubricate, and adjust hardware.

C. Clean casework on exposed and semi-exposed surfaces. Touch up shop-applied finishes to restore damaged or soiled areas.

D. Provide final protection and maintain conditions, in a manner acceptable to manufacturer and Installer, which ensures that woodwork is being without damage or deterioration at time of Substantial Completion.

END OF SECTION

PART 1 - GENERAL

1.01 RELATED DOCUMENTS

A. Drawings and general provisions of the Contract, including General and Supplementary Conditions and Division 1 Specification Sections, apply to this Section.

1.02 SUMMARY

A. Section Includes:

1. Foam-plastic board insulation.
2. Glass-fiber blanket insulation.

1.03 RELATED REQUIREMENTS

A. Section01 61 16 - Volatile Organic Compound (VOC) Content Restrictions.

B. Section07 24 00 - Exterior Insulation and Finish System: Board insulation on exterior side of walls, finished with weatherproof coating.

C. Section07 14 00 - Cold Fluid-Applied Waterproofing.

1.04 REFERENCE STANDARDS

(Current Edition at Date of Bid)

A. ASTM C578 - Standard Specification for Rigid, Cellular Polystyrene Thermal Insulation.

B. ASTM C665 - Standard Specification for Mineral-Fiber Blanket Thermal Insulation for Light Frame Construction and Manufactured Housing.

C. ASTM E84 - Standard Test Method for Surface Burning Characteristics of Building Materials.

D. ASTM E136 - Standard Test Method for Behavior of Materials in a Vertical Tube Furnace At 750° C.

1.05 SUBMITTALS

A. See Section01 33 00 - Submittals Procedures.

B. Product Data: Provide data on product characteristics, performance criteria, and product limitations.

C. Manufacturer's Installation Instructions: Include information on special environmental conditions required for installation and installation techniques.

D. Manufacturer's Certificate: Certify that products meet or exceed specified requirements.

PART 2 - PRODUCTS

2.01 FOAM-PLASTIC BOARD INSULATION

A. Foundation Insulation: Extruded-polystyrene board insulation complying with ASTM C578, square edged.

1. Type VI, 40-psi minimum compressive strength.
2. Thickness: 2 inches.

2.02 BLANKET INSULATION

A. Manufacturers: Subject to compliance with requirements, available manufacturers offering products that may be incorporated into the Work include, but are not limited to, the following:

1. CertainTeed Corporation.
2. Guardian Building Products, Inc.
3. Johns Manville.
4. Knauf Insulation.
5. Owens Corning.

B. Unfaced, Glass-Fiber Blanket Insulation: ASTM C665, Type I; with maximum flame-spread and smoke-developed indexes of 25 and 50, respectively, per ASTM E84; passing ASTM E136 for combustion characteristics.

C. Polypropylene-Scrim-Kraft-Faced, Glass-Fiber Blanket Insulation: ASTM C 665, Type II (non-reflective faced), Class A (faced surface with a flame-spread index of 25 or less); Category 1 (membrane is a vapor barrier).

PART 3 - EXECUTION

3.01 INSTALLATION, GENERAL

A. Comply with insulation manufacturer's written instructions applicable to products and applications indicated.

B. Install insulation that is undamaged, dry, and unsoiled and that has not been left exposed to ice, rain, or snow at any time.

C. Extend insulation to envelop entire area to be insulated. Cut and fit tightly around obstructions and fill voids with insulation. Remove projections that interfere with placement.

D. Provide sizes to fit applications indicated and selected from manufacturer's standard thicknesses, widths, and lengths. Apply single layer of insulation units to produce thickness indicated unless multiple layers are otherwise shown or required to make up total thickness.

3.02 INSTALLATION OF BELOW-GRADE INSULATION

A. On vertical footing and foundation wall surfaces, set insulation units using manufacturer's recommended adhesive according to manufacturer's written instructions.

1. If not otherwise indicated, extend insulation a minimum of 24 inches below exterior grade line.

B. On horizontal surfaces under slabs, loosely lay insulation units according to manufacturer's written instructions. Stagger end joints and tightly abut insulation units.

1. If not otherwise indicated, extend insulation a minimum of 24 inches in from exterior walls.

3.03 INSTALLATION OF INSULATION FOR FRAMED CONSTRUCTION

A. Apply insulation units to substrates by method indicated, complying with manufacturer's written instructions. If no specific method is indicated, bond units to substrate with adhesive or use mechanical anchorage to provide permanent placement and support of units.

B. Glass-Fiber or Mineral Wool Blanket Insulation: Install in cavities formed by framing members according to the following requirements:

1. Use insulation widths and lengths that fill the cavities formed by framing members. If more than one length is required to fill the cavities, provide lengths that will produce a snug fit between ends.

2. Place insulation in cavities formed by framing members to produce a friction fit between edges of insulation and adjoining framing members.

3. Maintain 3-inch clearance of insulation around recessed lighting fixtures not rated for or protected from contact with insulation.

4. For metal-framed wall cavities where cavity heights exceed 96 inches, support unfaced blankets mechanically and support faced blankets by taping flanges of insulation to flanges of metal studs.

C. Miscellaneous Voids: Install insulation in miscellaneous voids and cavity spaces where required to prevent gaps in insulation using the following materials:

1. Loose-Fill Insulation: Compact to approximately 40 percent of normal maximum volumeequaling a density of approximately 2.5 lb/cu. ft.

2. Spray Polyurethane Insulation: Apply according to manufacturer's written instructions.

3.04 CEILING INSULATION

A. Install tightly butted over ceiling panels. Install additional insulation over water and sprinkler piping to insure piping is in the conditioned space.

END OF SECTION

PART 1 - GENERAL

1.01 RELATED DOCUMENTS

A. Drawings and general provisions of the Contract, including General and Supplementary Conditions and Division 1 Specification Sections, apply to this Section.

1.02 SUMMARY

A. Products Supplied Under This Section

1. Vapor Barrier, seam tape, mastic, pipe boots, detail strip for installation under concrete slabs.

B. Related Sections

1. Section 03 30 00 - Cast-In-Place Concrete

1.03 REFERENCES

(Current Edition at Date of Bid)

A. American Society for Testing and Materials (ASTM)

1. ASTM E1745 Standard Specification for Plastic Water Vapor Retarders Used in Contact with Soil or Granular Fill Under Concrete Slabs
2. ASTM E154 Standard Test Methods for Water Vapor Retarders Used in Contact with Earth Under Concrete Slabs
3. ASTM E96 Standard Test Methods for Water Vapor Transmission of Materials
4. ASTM E1643 Standard Practice for Installation of Water Vapor Retarders Used in Contact with Earth or Granular Fill Under Concrete Slabs

B. American Concrete Institute (ACI)

1. ACI 302.1R Vapor Barrier Component (plastic membrane) is not less than 15 mils thick
2. ACI 302.2R Guide for Concrete Slabs that Receive Moisture-Sensitive Flooring Materials.

1.04 SUBMITTALS

A. Quality Control / Assurance

1. Independent laboratory test results showing compliance with ASTM & ACI Standards.
2. Manufacturer’s samples, literature.
3. Manufacturer’s installation instructions for placement, seaming and pipe boot installation.

PART 2 - PRODUCTS

2.01 MATERIALS

A. Vapor Barrier

1. Vapor Barrier must have the following qualities
   a. WVTR less than or equal to 0.006 as tested by ASTM E96.
   b. Strength: ASTM E 1745 Class A.
   c. Thickness: 15 mils minimum.
2. Vapor Barrier Products
   a. Stego Wrap Vapor Barrier by Stego Industries, 15 mil (877) 464-7834.
      www.stegoindustries.com
   b. Vaporguard by Reef
   c. Zero-Perm by Alumiseal.
   d. Perminator 15 by WR Meadows

2.02 ACCESSORIES

A. Seam Tape

1. Tape must have the following qualities:
   a. Water Vapor Transmission Rate ASTM E96, 0.3 perms or lower.

B. Vapor Proofing Mastic

1. Mastic must have the following qualities:
    a. Water Vapor Transmission Rate ASTM E96, 0.3 perms or lower.

C. Pipe Boots
1. Construct pipe boots from vapor barrier material, pressure sensitive tape and/or mastic per manufacturer's instructions.

PART 3 - EXECUTION

3.01 PREPARATION

A. Ensure that subsoil is approved by architect or geotechnical firm
1. Level and tamp or roll aggregate, sand or tamped earth base.

3.02 INSTALLATION

A. Install Vapor Barrier:
1. Installation shall be in accordance with manufacturer's instructions and ASTM E1643-11.
    a. Unroll Vapor Barrier with the longest dimension parallel with the direction of the pour.
    b. Lap Vapor Barrier over footings and extend vapor barrier to the perimeter of the slab, terminate it at the top of the slab and extend 6" beyond. Otherwise at a point acceptable to the architect where obstructed by impediments, or any other site condition requiring early termination of the vapor barrier. At the point of termination, seal vapor barrier to the slab itself with mastic.
    c. Overlap joints 6 inches and seal with mastic.
    d. Seal all penetrations (including pipes) with mastic per manufacturer's instructions.
    e. No penetration of the Vapor Barrier is allowed except for reinforcing steel and permanent utilities.
    f. Repair damaged areas by cutting patches of Vapor Barrier, overlapping damaged area 6 inches and apply full area of mastic.

END OF SECTION

PART 1 - GENERAL

1.01 RELATED DOCUMENTS

A. Drawings and general provisions of the Contract, including General and Supplementary Conditions and Division 01 Specification Sections, apply to this Section.

1.02 SUMMARY

A. Section Includes:

1. Manufactured reglets and counterflashing.
2. Formed low-slope roof sheet metal fabrications.

1.03 SUBMITTALS

A. Product Data: For each type of product indicated.

B. Shop Drawings: Show installation layouts of sheet metal flashing and trim, including plans, elevations, expansion-joint locations, and keyed details. Distinguish between shop and field assembled work.

1. Include details for forming, joining, supporting, and securing sheet metal flashing and trim, including pattern of seams, termination points, fixed points, expansion joints, expansion-joint covers, edge conditions, special conditions, and connections to adjoining work.

C. Samples: Submit one 8 inch long sample of each metal type for each pre-finished color.

D. Warranty: Sample of special warranty.

1.04 QUALITY ASSURANCE

A. Sheet Metal Flashing and Trim Standard: Comply with SMACNA's "Architectural Sheet Metal Manual" unless more stringent requirements are specified or shown on Drawings.

B. Fabricator and Installer Qualifications: Company specializing in sheet metal work with 5 years of documented experience.

1.05 WARRANTY

A. Special Warranty on Finishes: Manufacturer's standard form in which manufacturer agrees to repair finish or replace sheet metal flashing and trim that shows evidence of deterioration of factory-applied finishes within 20 years from date of Substantial Completion.

1.06 DELIVERY, STORAGE, AND HANDLING

A. Stack material to prevent twisting, bending, and abrasion, and to provide ventilation. Slope metal sheets to ensure drainage.

B. Prevent contact with materials that could cause discoloration or staining.

PART 2 - PRODUCTS

2.01 SHEET METALS

A. General: Protect mechanical and other finishes on exposed surfaces from damage by applying a strippable, temporary protective film before shipping.

B. Copper Sheet: ASTM B 370, cold-rolled copper sheet, H00 or H01 temper.

1. Non-Patinated Exposed Finish: Mill.

C. Aluminum Sheet: ASTM B 209, alloy as standard with manufacturer for finish required, with temper as required to suit forming operations and performance required.

1. Exposed Coil-Coated Finishes:

a. Two-Coat Fluoropolymer: AAMA 620. Fluoropolymer finish containing not less than 70 percent PVDF resin by weight in color coat.

2. Color: As selected by Architect from manufacturer’s full range.

D. Stainless Steel Sheet (all metal flashings except through-wall flashing pans):

1. ASTM A167, Type 304, dull cold rolled finish.

E. Stainless-Steel Sheet (Through-wall Flashing Pans): ASTM A 240/A 240M or ASTM A 666, Type 316, dead soft, fully annealed; 2D (dull, cold rolled) finish.

F. Metallic-Coated Steel Sheet: Restricted flatness steel sheet, metallic coated by the hot-dip process and

prepainted by the coil-coating process to comply with ASTM A755/A755M.

1. Zinc-Coated (Galvanized) Steel Sheet: ASTM A 653/A 653M, G90 coating designation; structural quality.
2. Surface: Mill phosphatized surface where indicated for field painting.

G. Aluminum-Zinc Alloy-Coated Steel Sheet: ASTM A 792/A 792M, Class AZ50 coating designation, Grade 40 (Class AZM150 coating designation, Grade 275); structural quality.

1. Surface: Manufacturer's standard clear acrylic coating on both sides.
2. Exposed Coil-Coated Finish:
   a. Three-Coat Fluoropolymer: AAMA 621. Fluoropolymer finish containing not less than 70 percent PVDF resin by weight in both color coat and clear topcoat.
3. Color: As selected by Architect from manufacturer's full range.

2.02 UNDERIAYMENT MATERIALS

A. Self-Adhering, High-Temperature Sheet: Minimum 40 mils thick, consisting of slip-resisting polyethylene-film top surface laminated to layer of butyl or SBS-modified asphalt adhesive, with release-paper backing; cold applied. Provide primer when recommended by underlayment manufacturer.

1. Thermal Stability: ASTM D 1970; stable after testing at 240°F.
2. Low-Temperature Flexibility: ASTM D 1970; passes after testing at minus 20°F.

2.03 MISCELLANEOUS MATERIALS

A. General: Provide materials and types of fasteners, solder, welding rods, protective coatings, separators, sealants, and other miscellaneous items as required for complete sheet metal flashing and trim installation and recommended by manufacturer of primary sheet metal or manufactured item unless otherwise indicated.

B. Fasteners: Wood screws, annular threaded nails, self-tapping screws, self-locking rivets and bolts, and other suitable fasteners designed to withstand design loads and recommended by manufacturer of primary sheet metal or manufactured item.

1. General: Blind fasteners or self-drilling screws, gasketed, with hex-washer head.
   a. Exposed Fasteners: Heads matching color of sheet metal using plastic caps or factory-applied coating.
   b. Blind Fasteners: High-strength aluminum or stainless-steel rivets suitable for metal being fastened.
   c. Spikes and Ferrules: Same material as gutter; with spike with ferrule matching internal gutter width.
2. Fasteners for Stainless-Steel Sheet: Series 300 stainless steel.
3. Fasteners for Zinc-Coated (Galvanized) Steel Sheet: Hot-dip galvanized steel according to ASTM A153/A153M or ASTM F2329 or Series 300 stainless steel.
4. Fasteners for Aluminum Sheet: Aluminum or Series 300 stainless steel.

C. Solder:

1. For Stainless Steel: ASTM B 32, Grade Sn6O, with an acid flux of type recommended by stainless-steel sheet manufacturer.
2. For Zinc-Coated (Galvanized) Steel: ASTM B 32, Grade Sn5O, 50 percent tin and 50 percent lead or Grade Sn6O, 60 percent tin and 40 percent lead.

D. Sealant Tape: Pressure-sensitive, 100 percent solids, gray polyisobutylene compound sealant tape with release-paper backing. Provide permanently elastic, nonsag, nontoxic, nonstaining tape 1/2 inch wide and 1/8 inch thick.

E. Elastomeric Sealant: ASTM C920, elastomeric polymer sealant; low modulus; of type, grade, class, and use classifications required to seal joints in sheet metal flashing and trim and remain watertight.

F. Butyl Sealant: ASTM C 1311, single-component, solvent-release butyl rubber sealant; polyisobutylene plasticized; heavy bodied for hooked-type expansion joints with limited movement.

G. Bituminous Coating: Cold-applied asphalt emulsion complying with ASTM D1187.

H. Epoxy Seam Sealer: Two-part, noncorrosive, aluminum seam-cementing compound, recommended by aluminum manufacturer for exterior nonmoving joints, including riveted joints.

2.04 REGLETS

A. Reglets: Units of type, material, and profile indicated, formed to provide secure interlocking of separate reglet and counterflashing pieces, and compatible with flashing indicated with factory-mitered and -

welded corners and junctions with interlocking counterflashing on exterior face, of same metal as reglet.

1. Material: Galvanized steel, 0.022 inch thick or as indicated.
2. Finish: Match adjacent wall color and gloss with manufacturer's standard color coating or as indicated.

2.05 FABRICATION, GENERAL

A. General: Custom fabricate sheet metal flashing and trim to comply with recommendations in SMACNA's "Architectural Sheet Metal Manual" that apply to design, dimensions, geometry, metal thickness, and other characteristics of item indicated. Fabricate items at the shop to greatest extent possible.

1. Obtain field measurements for accurate fit before shop fabrication.
2. Form sheet metal flashing and trim without excessive oil canning, buckling, and tool marks and true to line and levels indicated, with exposed edges folded back to form hems.
3. Conceal fasteners and expansion provisions where possible. Exposed fasteners are not allowed on faces exposed to view.

B. Sealed Joints: Form nonexpansion but movable joints in metal to accommodate elastomeric sealant.

C. Expansion Provisions: Where lapped expansion provisions cannot be used, form expansion joints of intermeshing hooked flanges, not less than 1 inch deep, filled with butyl sealant concealed within joints.

D. Fabricate cleats and attachment devices from same material as accessory being anchored or from compatible, noncorrosive metal.

E. Seams: Fabricate nonmoving seams with flat-lock seams. Form seams and seal with elastomeric sealant unless otherwise recommended by sealant manufacturer for intended use. Rivet joints where necessary for strength.

F. Seams: Fabricate nonmoving seams with flat-lock seams. Form seams and seal with elastomeric sealant unless otherwise recommended by sealant manufacturer for intended use. Rivet joints where necessary for strength.

G. Seams for Aluminum: Fabricate nonmoving seams with flat-lock seams. Form seams and seal with epoxy seam sealer. Rivet joints where necessary for strength.

2.06 LOW-SLOPE ROOF SHEET METAL FABRICATIONS

A. Roof-Edge Flashing (Gravel Stop) and Fascia Cap: Fabricate in minimum 96-inch long, but not exceeding 10-foot- long, sections. Furnish with 6-inch- wide, joint cover plates. Fabricate from the following materials:

1. Aluminum: 0.050 inch thick.

B. Copings: Fabricate in minimum 96-inch- long, but not exceeding 10-foot- long, sections. Fabricate joint plates of same thickness as copings. Furnish with continuous cleats to support edge of external leg and drill elongated holes for fasteners on interior leg. Miter comers, seal, and solder or weld watertight. Fabricate from the following materials:

1. Aluminum: 0.050 inch thick.

C. Base Flashing: Fabricate from the following materials:

1. Galvanized Steel: 0.028 inch thick.

D. Counterflashing and Flashing Receivers: Fabricate from the following materials:

1. Galvanized Steel: 0.022 inch thick.

E. Roof-Penetration Flashing: Fabricate from the following materials:

1. Galvanized Steel: 0.028 inch thick.

F. Roof-Drain Flashing: Fabricate from the following materials:

1. Stainless Steel: 0.016 inch thick.

2.07 STEEP-SLOPE ROOF SHEET METAL FABRICATIONS

A. Apron, Step, Cricket, and Backer Flashing: Fabricate from the following materials:

1. Aluminum: 0.032 inch thick.

B. Valley Flashing: Fabricate from the following materials:

1. Aluminum: 0.032 inch thick.

C. Drip Edges: Fabricate from the following materials:

1. Aluminum: 0.032 inch thick.

D. Eave, Rake, Ridge, and Hip Flashing: Fabricate from the following materials:

1. Aluminum: 0.032 inch thick.

2.08 ROOF DRAINAGE SHEET METAL FABRICATIONS

A. Hanging Gutters: Fabricate to cross section indicated, complete with end pieces, outlet tubes, and other accessories as required. Fabricate in minimum 96-inchlong sections. Furnish flat-stock gutter spacers and gutter brackets fabricated from same metal as gutters, of size recommended by SMACNA but not less than twice the gutter thickness. Fabricate expansion joints, expansion-joint covers, gutter bead reinforcing bars, and gutter accessories from same metal as gutters.

1. Accessories: Wire ball downspout strainer.
2. Fabricate from the following materials:
    a. Aluminum: 0.032 inch thick

B. Built-in Gutters: Fabricate to cross section indicated, with riveted and soldered joints, complete with end pieces, outlet tubes, and other special accessories as required. Fabricate in minimum 96-inch long sections. Fabricate expansion joints and accessories from same metal as gutters unless otherwise indicated.

1. Accessories: Wire ball downspout strainer.
2. Fabricate from the following materials:
    a. Stainless Steel: 24 gauge thick.

C. Downspouts: Fabricate downspouts complete with mitered elbows. Furnish with metal hangers, from same material as downspouts, and anchors.

1. Hanger Style: Same profile as the Downspout.
2. Fabricate from the following materials:
    a. Aluminum: 0.032 inch thick.

D. Parapet Scuppers: Fabricate scuppers of dimensions required with closure flange trim to exterior, 4-inch-wide wall flanges to interior, and base extending 4 inches beyond cant or tapered strip into field of roof. Fasten gravel guard angles to base of scupper. Fabricate from the following materials:

1. Stainless Steel: 24 gauge thick.

E. Conductor Heads: Fabricate conductor heads with flanged back and stiffened top edge and of dimensions and shape indicated complete with outlet tubes, exterior flange trim and built-in overflows. Fabricate from the following materials:

1. Aluminum: 0.032 inch thick.

F. Splash Pans: Fabricate from the following materials:

1. Stainless Steel: 24 gauge thick.

2.09 WALL SHEET METAL FABRICATIONS

A. Through-Wall Flashing: Fabricate continuous flashings in minimum 96-inchlong, but not exceeding 12-foot-long, sections, under copings, at shelf angles, and where indicated. Fabricate discontinuous lintel, sill, and similar flashing to extend 6 inches beyond each side of wall openings. Form with 2-inch high, end dams where flashing is discontinuous. Fabricate from the following materials:

1. Aluminum: 0.032 inch thick.

B. Opening Flashing in Frame Construction: Fabricate head, sill, jamb, and similar flashings to extend to the sealant line of the wall openings. From head and sill flashing with 2-inch-high, end dams. Fabricate from the following materials:

1. Aluminum: 0.032 inch thick.

C. Wall Expansion-Joint Cover: Fabricate from the following materials:

1. Aluminum: 0.032 inch thick.

2.10 FINISHES

A. Galvanized Steel: High-Performance Organic Coating Finish. Apply the following system by coil-coating process on galvanized steel sheet as recommended by coating manufacturers and applicator.

1. Fluoropolymer 2-Coat Coating System: Manufacturer's standard 2-coat thermocured system composed of inhibitive primer and fluoropolymer topcoat containing not less than 70 percent polyvinyldene fluoride resin by weight; complying with AAMA 605.2.
2. Color and Gloss: To be selected from manufacturer's full line of available colors.

PART 3 - EXECUTION

3.01 UNDERLAYMENT INSTALLATION

A. Self-Adhering Sheet Underlayment: Install self-adhering sheet underlayment, wrinkle free. Comply with temperature restrictions of underlayment manufacturer for installation; use primer rather than nails for installing underlayment at low temperatures. Apply in shingle fashion to shed water, with end laps of not less than 6 inches staggered 24 inches between courses. Overlap side edges not less than 3-1/2 inches. Roll laps with roller. Cover underlayment within 14 days.

3.02 INSTALLATION, GENERAL

A. General: Anchor sheet metal flashing and trim and other components of the Work securely in place, with provisions for thermal and structural movement so that completed sheet metal flashing and trim shall not rattle, leak, or loosen, and shall remain watertight. Use fasteners, solder, welding rods, protective coatings, separators, sealants, and other miscellaneous items as required to complete sheet metal flashing and trim system.

1. Install sheet metal flashing and trim true to line and levels indicated. Provide uniform, neat seams with minimum exposure of solder, welds, and sealant.
2. Install sheet metal flashing and trim to fit substrates and to result in watertight performance. Verify shapes and dimensions of surfaces to be covered before fabricating sheet metal.
3. Space cleats not more than 12 inches apart. Anchor each cleat with two fasteners. Bend tabs over fasteners.
4. Install exposed sheet metal flashing and trim without excessive oil canning, buckling, and tool marks.
5. Torch cutting of sheet metal flashing and trim is not permitted.
6. Install sealant tape where indicated.

B. Metal Protection: Where dissimilar metals will contact each other or corrosive substrates, protect against galvanic action by painting contact surfaces with bituminous coating or by other permanent separation as recommended by SMACNA.

1. Coat back side of uncoated stainless-steel sheet metal flashing and trim with bituminous coating where flashing and trim will contact wood, ferrous metal, or cementitious construction.
2. Underlayment: Where installing metal flashing directly on cementitious or wood substrates, install a course of felt underlayment and cover with a slip sheet or install a course of polyethylene sheet.

C. Expansion Provisions: Provide for thermal expansion of exposed flashing and trim. Space movement joints at a maximum of 10 feet with no joints allowed within 24 inches of comer or intersection. Where lapped expansion provisions cannot be used or would not be sufficiently watertight, form expansion joints of intermeshing hooked flanges, not less than 1 inch deep, filled with sealant concealed within joints.

D. Fastener Sizes: Use fasteners of sizes that will penetrate wood sheathing not less than 1-1/4 inches for nails and not less than ¾ inch for wood screws and for metal decking not less than recommended by fastener manufacturer to achieve maximum pull-out resistance.

E. Seal joints as shown and as required for watertight construction.

F. Soldered Joints: Clean surfaces to be soldered, removing oils and foreign matter. Pre-tin edges of sheets to be soldered to a width of 1-1/2 inches, except reduce pre-tinning where pre-tinned surface would show in completed Work.

1. Do not solder metallic-coated steel sheet.
2. Do not solder aluminum sheet.
3. Do not use torches for soldering. Heat surfaces to receive solder and flow solder into joint. Fill joint completely. Completely remove flux and spatter from exposed surfaces.
4. Stainless-Steel Soldering: Tin edges of uncoated sheets using solder recommended for stainless steel and acid flux. Promptly remove acid flux residue from metal after tinning and soldering. Comply with solder manufacturer's recommended methods for cleaning and neutralization.

G. Rivets: Rivet joints where necessary for strength. Rivet joints in uncoated aluminum where indicated and where necessary for strength.

3.03 ROOF DRAINAGE SYSTEM INSTALLATION

A. General: Install sheet metal roof drainage items to produce complete roof drainage system according to SMACNA recommendations and as indicated. Coordinate installation of roof perimeter flashing with installation of roof drainage system.

B. Hanging Gutters: Join sections with riveted and soldered joints or with lapped joints sealed with sealant. Provide for thermal expansion. Attach gutters at eave or fascia to firmly anchored twisted straps spaced

not more than 36 inches apart. Provide end closures and seal watertight with sealant. Slope to downspouts.

1. Install gutter with expansion joints at locations indicated, but not exceeding, 50 feet apart. Install expansion-joint caps.
2. Install continuous gutter screens on gutters with noncorrosive fasteners, removable for cleaning gutters.

C. Built-in Gutters: Join sections with riveted and soldered or lapped joints sealed with sealant. Provide end closures and seal watertight with sealant.

1. Install self-adhering sheet underlayment layer in built-in gutter trough and extend to drip edge at eaves and under felt underlayment on roof sheathing. Lap sides a minimum of 2 inches over underlying course. Lap ends a minimum of 4 inches. Stagger end laps between succeeding courses at least 72 inches. Fasten with roofing nails.
2. Install gutter with expansion joints at locations indicated, but not exceeding, 50 feet apart. Install expansion-joint caps.

D. Downspouts: Join sections with 1-1/2-inch telescoping joints. Provide hangers with fasteners designed to hold downspouts securely to walls. Locate hangers at top and bottom and at approximately 48 inches o.c. in between.

E. Splash Pans: Install where downspouts discharge on low-slope roofs. Set in adhesive material compatible with the roofing.

F. Parapet Scuppers: Install scuppers where indicated through parapet. Continuously support scupper, set to correct elevation, and seal flanges to interior wall face, over cants or tapered edge strips, and under roofing membrane.

G. Conductor Heads: Anchor securely to wall with elevation of conductor head rim 1 inch below scupper or gutter discharge.

H. Expansion-Joint Covers: Install expansion-joint covers at locations and of configuration indicated. Lap joints a minimum of 4inches in direction of water flow.

3.04 ROOF FLASHING INSTALLATION

A. General: Install sheet metal flashing and trim to comply with performance requirements, sheet metal manufacturer's written installation instructions, and SMACNA's "Architectural Sheet Metal Manual." Provide concealed fasteners where possible, set units true to line, and level as indicated. Install work with laps, joints, and seams that will be permanently watertight and weather resistant.

B. Roof Edge Flashing: Anchor to resist uplift and outward forces according to recommendations in SMACNA's "Architectural Sheet Metal Manual" and as indicated. Interlock bottom edge of roof edge flashing with continuous cleat anchored to substrate at staggered 3-inch centers.

C. Copings: Anchor to resist uplift and outward forces according to recommendations in SMACNA's "Architectural Sheet Metal Manual" and as indicated.

1. Interlock exterior bottom edge of coping with continuous cleat anchored to substrate at 24-inch centers.
2. Anchor interior leg of coping with washers and screw fasteners through slotted holes at 24-inch centers.

D. Pipe or Post Counterflashing: Install counterflashing umbrella with close-fitting collar with top edge flared for elastomeric sealant, extending a minimum of 4 inches over base flashing. Install stainless-steel draw band and tighten.

E. Counterflashing: Coordinate installation of counterflashing with installation of base flashing. Insert counterflashing in reglets or receivers and fit tightly to base flashing. Extend counterflashing 4 inches over base flashing. Lap counterflashing joints a minimum of 4 inches and bed with sealant.

F. Roof-Penetration Flashing: Coordinate installation of roof-penetration flashing with installation of roofing and other items penetrating roof. Seal with butyl sealant and clamp flashing to pipes that penetrate roof.

3.05 WALL FLASHING INSTALLATION

A. General: Install sheet metal wall flashing to intercept and exclude penetrating moisture according to SMACNA recommendations and as indicated. Coordinate installation of wall flashing with installation of wall-opening components such as windows, doors, and louvers.

B. Reglets: Installation of reglets is specified in Division 04 Sections "Unit Masonry" and "Brick Masonry."

3.06 CLEANING AND PROTECTION

A. Clean exposed metal surfaces of substances that interfere with uniform oxidation and weathering.

B. Clean and neutralize flux materials. Clean off excess solder and sealants.

C. Remove temporary protective coverings and strippable films as sheet metal flashing and trim are installed unless otherwise indicated in manufacturer's written installation instructions.

END OF SECTION

----------THIS PAGE LEFT INTENTIONALLY BLANK----------

PART 1 - GENERAL

1.01 RELATED DOCUMENTS

A. Drawings and general provisions of the Contract, including General and Supplementary Conditions and Division 01 Specification Sections, apply to this Section.

1.02 SUMMARY

A. Section Includes:

1. Design, engineer, and install firestopping in compliance within context of this specification to include, but not limited to:
    a. Fire stops
    b. Fire resistive joint systems
    c. Perimeter fire barriers

B. Related Requirements:

1. Refer to work specified in fire suppression, plumbing, HVAC, and electrical, specification sections for other related requirements applicable to installation, including, but not limited to:
    a. Metal sleeves for fire rated openings through floors and walls

1.03 REFERENCES

A. Referenced Sections:

1. Section 01 40 00 - Quality Requirements
2. Section 01 78 00 - Closeout Submittals: Warranties

B. Referenced Standards

1. Publications listed herein are part of this specification to extent referenced.
2. Comply with applicable provisions of standards referenced within this specification except as modified by governing codes and Contract Documents. Where a recommendation or suggestion occurs in referenced standards, they shall be considered mandatory.

C. American Society for Testing and Materials:
(Current Edition at Date of Bid)

1. ASTM C612 Specification for Mineral Fiber Block and Board Thermal Insulation
2. ASTM E84 Test Method for Surface Burning Characteristics of Building Materials
3. ASTM E119 Fire Tests of Building Construction and Materials
4. ASTM E814 Fire Tests of Through-Penetration Firestops
5. ASTM E1399 Test Method for Cyclic Movement and Measurement Minimumand Maximum Joint Widths of Architectural Joint Systems
6. ASTM E1966 Test Method for Fire-Resistive Joint Systems
7. ASTM E2174 Practice for On-Site Inspection of Installed Fire Stops
8. ASTM E2307 Test Method for Determining the Fire Resistance of Perimeter FireBarrier Systems Using Intermediate-Scale, Multi-story Test Apparatus
9. ASTM E2393 Practice for On-Site Inspection of Installed Fire Resistive JointSystems and Perimeter Fire Barriers

D. FM Global:

1. Factory Mutual Firestop Contractor Approval Standard, Class 4991

E. Underwriters Laboratories:

1. UL 263 Fire Tests of Building Construction and Materials
2. UL 723 Surface Burning Characteristics of Building Materials
3. UL 1479 Fire Tests of Through-Penetration Firestops
4. UL Building Materials Directory:
    a. Through-penetration firestop devices (XHCR)
    b. Fire resistance ratings (BXUV)

c. Through-penetrations firestop systems (XHEZ)

d. Fill, void, or cavity material (XHHW)

5. UL 2079 Fire Tests for Fire Resistance of Building Joint Systems

6. UL Qualified Firestop Contractor Program

1.04 DEFINITIONS

A. Industry Trade Terms applicable to this Specification:

1. ANNULUS is opening around penetrant. For pipe penetrations, ring around pipe where fill material is applied.

2. BARRIER shall be defined as any bearing or non-bearing wall or floor that has an hourly fire or smoke rating.

3. CONSTRUCTION GAPS shall be defined as any gap, joint, or opening, whether static or dynamic, where top of wall may meet a floor; wall to wall applications; edge to edge configurations; floor to exterior wall; or any linear breach in a rated barrier.

4. ENDOTHERMIC is a chemical reaction that allows materials to absorb heat.

5. FILL MATERIAL shall be defined as firestop material used to seal opening around penetrant.

6. FIRESTOPPING shall be defined as a material, or combination of materials for specific application to retain integrity of time-rated construction by maintaining an effective barrier against spread of flame, smoke, and gasses.

7. FIRE RATED ASSEMBLIES include fire rated walls, floors, floor/ceiling and roof assemblies. Rating shall be per ASTM E119 or UL 263.

8. FIRESTOP SYSTEM is a system designed to prevent spread of fire through openings in fire rated assemblies for a specific period of time. Incorporating use of specific products installed in a specific manner, they shall only be in configurations for which they have been specifically tested and listed by UL 1479or Factory Mutual per ASTM E814.

9. F-RATING is amount of time that an assembly has successfully been tested to resist penetration of fire.

10. HEAD-OF-WALL is gap between top of a wall assembly and lower surface of floor or roof assembly above it.

11. HOSE STREAM TEST is test of physical integrity of an assembly after a specified period of burning whereby it is removed from furnace and exposed to a blast of water from a fireman's hose. ASTM E119 specifies nozzle size, pressure, duration, and distance from assembly.

12. INTUMESCENT MATERIALS expand in volume when exposed to heat or flames exceeding a specified temperature.

13. L-RATING measures a firestop's ability to prevent air and smoke leakage when subjected to a known air pressure. Values are given for ambient and elevated temperatures (400°F).

14. NON-COMBUSTIBLE MATERIALS will not burn or melt during a fire.

15. PENETRATIONS:

a. THROUGH-PENETRATION is any penetration of a fire-rated wall or floor that completely breaches barrier.

b. MEMBRANE-PENETRATION is any penetration of a fire-rated wall that breaches only one side of barrier.

16. SAFING JOINT is gap between floor in a high-rise building and curtain wall.

17. SLEEVE is a liner, generally metallic, used to create an annulus around penetrants. May be cast into concrete as it is poured or placed in an existing opening and back-filled.

18. T-RATING measures thermal conductivity of a firestop system. Time it takes for unexposed side of assembly to rise 325°F over its initial starting temperature.

1.05 ADMINISTRATIVE REQUIREMENTS

A. Coordination:

1. Coordinate construction of openings and penetrating items to ensure that firestopping assemblies are installed in compliance with specific requirements.

2. Coordinate sizes of sleeves, openings, core drilled holes, or cut openings to accommodate through-penetration firestop systems.

B. Pre-Installation Meetings:

1. Schedule a conference to be held on-site not less than 14 days before firestopping work begins.

Provide not less than one-week advance notification to attendees, Owner, and Architect.

2. Conference attendees shall include Contractor, Owner's representative, Architect, firestopping installer, and any of other trades affected by installation of firestopping assemblies.

3. Topics to be discussed at meeting shall include:

a. A review of Contract Documents and accepted shop drawings shall be made and deviations or differences shall be resolved.

b. Factory Mutual and Underwriters' Laboratories requirements shall be reviewed and conflicts in FM or UL specifications and manufacturer's requirements shall be resolved.

c. Inform and educate parties involved with firestopping process of their role and how they can affect firestopping on Project.

d. Review areas to receive different firestopping systems and transition between various systems to be used.

4. Pre-construction conference and inspection shall serve to clarify Contract Documents, application requirements and what work should be completed before installation can begin.

5. Prepare and submit to parties in attendance, Architect, and Owner a written report of pre-installation conference. Report shall be submitted within 3 days following conference.

C. Sequencing:

1. Perform work of this section in proper sequence to prevent damage to firestop system and to ensure installation will occur prior to enclosing or concealing work. Firestopping shall precede finishing of gypsum board.

2. Do not conceal firestopping installations until inspection agency or authorities having jurisdiction, as required, have examined each installation.

D. Single Responsibilities:

1. Contract firestopping work to a single firm for design, engineering, and installation so as to establish undivided responsibility for firestop systems for entire Work.

2. Contract firestopping not later than contracts for building services and wall systems, including but not limited to ducts, piping, conduit, masonry, gypsum board, and exterior wall, to allow time for coordination of firestopping with other trades.

1.06 SUBMITTALS

A. Product Data:

1. Submit manufacturer's literature describing each firestop product to be provided, including:

a. Preparation instructions and recommendations

b. Storage and handling requirements and recommendations

c. Manufacturer's installation instructions and methods

B. Shop Drawings:

1. Submit scaled shop drawings prepared specifically for Project to illustrate details, dimensions, and other data necessary to fully describe fabrication and installation of firestop assemblies.

a. Show each firestop system type, thickness, joint sizes, and other similar information.

b. Provide details of each proposed assembly identifying intended products and UL System number, or UL classification devices.

c. Provide a legend indicating location of each firestop system in Work.

d. Identify each specific firestop system with a type designation specific to Project and include in location legend. Indicate corresponding testing agency and system identification with year of test.

e. Show adjacent or related portions of Work in a complete manner.

2. Include dimensions, description of materials and finishes, general construction, specific modifications, component connections, anchorage methods, hardware, and installation procedures.

3. Identify each condition for which there is no tested and rated firestop system inexistence and furnish a certified design suitable for condition as approved by manufacturer's protection engineer. Use of an engineered deviation shall not be permitted if a tested and rated firestop system exists for condition.

C. Informational Submittals:

1. Certificates:

a. Prior to commencement of firestopping, submit a written statement signed by Contractor, and installer certifying that Contract Documents, shop drawings, and product data have been reviewed with material manufacturer's qualified technical representatives and that they agree selected materials are proper, compatible with contiguous materials, and adequate for applications indicated.

b. Provide certification that firm utilized for installation of firestop products is a Firestop Contractors International Association (FCIA) member in good standing and a FMG 4991 approved contractor.

c. Submit manufacturer's certification that products to be used are asbestos free and contain volatile organic compounds (VOCs) within limits of authorities having jurisdiction.

d. Upon completion, installer shall provide written certification that materials were installed in compliance with manufacturer's instructions and details and that each system has been accepted by local governing agencies for each specific condition on Project.

f. Provide certification verifying insurance coverages carried by firestop system installer and specialty engineer specified below. Submit insurance certificates with, or before first submission of shop drawings.

2. Delegated Design Submittals:

a. Submit documents for engineered assemblies specific to conditions and requirements of this Project to fully describe firestop systems.

3. Manufacturer's Instructions:

a. Submit manufacturer's installation procedures that shall be basis for accepting or rejecting actual installation procedures.

b. In addition to installation methods and guidelines, manufacturer's information shall include storage and handling requirements and recommendations, preparation, site care, and cleaning and maintenance instructions and recommendations.

c. Maintain one copy of manufacturer's instructions on-site.

5. Site Quality Control Submittals

a. Submit test results and inspection reports prepared by testing agency and manufacturer's technical representatives; refer to Site Quality Control requirements below.

6. Warranties:

a. Prior to commencement of firestopping submit a sample draft copy of manufacturer's warranty stating obligations, remedies, limitations, and exclusions of warranty for review and acceptance by Owner and Architect.

D. Contract Closeout Submittals:

1. Warranty Documentation:

a. Warranty documentation shall include final executed warranty document as approved or accepted by Owner.

1.07 QUALITY ASSURANCE

A. Regulatory Requirements:

1. Conform to applicable building code for fire resistance ratings.

2. Comply with installation requirements and protocol outlined in Firestop Contractors International Association (FCIA) Manual of Practice.

B. Testing Agency Services:

1. Unless otherwise indicated employ and pay for services of an independent commercial testing and inspection agency to perform professional consultation, inspections, tests, and other services specified refer to Site Quality Control below.

C. Qualifications:

1. Manufacturer Qualifications:

a. Firestop materials shall be provided from manufacturers that are members, in good standing, of Firestop Contractors International Association.

b. Use only firestop products that have been tested for specific fire-rated construction conditions conforming to construction assembly type, penetrating item type, annular

space requirements, and fire rating involved for each separate instance.

2. Installer Qualifications:

a. Installer shall be an independent contractor specializing in firestopping installation meeting any of following requirements:

1). Be FM Research approved in compliance with FMG Standard 4991

2). Be a UL Qualified Firestop Contractor

3). Be a contractor member in good standing of Firestop Contractors International Association

4). Be licensed by state or local authorities (where applicable)

b. Installer shall be acceptable to manufacturer of firestopping systems materials, shall demonstrate not less than 3 years experience, and have successfully completed not less than 5 comparable scale projects using systems proposed for use on this Project.

3. Testing Agency Qualifications:

a. Independent commercial testing and inspection agency shall be acceptable to Owner, and Architect and shall be qualified in compliance with Section 01 40 00 to conduct inspections indicated.

E. Site Samples:

1. Prior to installing firestopping, prepare a site sample for each different firestop system indicated to verify selections made and to demonstrate qualities of materials and execution. Build samples to comply with following requirements, using materials indicated for final installations.

a. Notify Owner and Architect not less than 72 hours in advance of dates and times when site samples will be installed.

2. Locate samples at areas on-site approved by Owner and Architect. Site samples shall be full size and not less than 2'-0" in length where appropriate.

3. Revise as needed to secure Architect's acceptance. Accepted site samples shall be used as datum for comparison with remainder of work of this Section for purposes of acceptance or rejection.

4. Upon acceptance by Architect, site samples may be included in finished Work.

1.08 DELIVERY, STORAGE, AND HANDLING

A. Delivery and Acceptance Requirements:

1. Labels shall include manufacturer's name, product identification, lot number, UL label, and mixing and installation instructions as applicable.

B. Storage and Handling Requirements:

1. Store and handle firestopping materials in compliance with manufacturers written instructions.

2. Protect materials from freezing or overheating in compliance with manufacturer's instructions.

3. Store materials off floor at temperatures between 40°F and 90°F.

1.09 SITE CONDITIONS

A. Ambient Conditions:

1. Maintain a non-toxic, unpolluted working area.

2. Do not apply materials when temperatures of substrate and ambient air are below 60°F. Maintain at least this minimum temperature for 3 days following installation of materials.

3. Provide ventilation in areas scheduled to receive solvent cured materials.

1.10 WARRANTY

A. Manufacturer's Warranty:

1. Firestop materials shall be free from cracking, checking, dusting, flaking, spalling, separation, and blistering for a period of 10 years from Date of Substantial Completion. Reinstall or repair such defect or failures at no cost to Owner.

PART 2 - PRODUCTS

2.01 MANUFACTURERS

A. Firestop Sealant, Mortar, Putty, Collars, and Sealing Systems:

1. 3M Fire Protection Products -3M

2. A/D Fire Protection Systems Inc.

3. Hilti Construction Chemicals Inc.
4. Nelson Firestop Products
5. Specified Technologies Inc. -STI
6. Tremco Construction Products
7. Grace Construction Products
8. NUCO Inc.
9. RectorSeal Corporation
10. USG Corpotation

B. Fire Safing Insulation:
1. A/D Fire Protection Systems Inc.
2. Fibrex Inc.
3. Owens-Corning
4. Roxul Inc.
5. Thermafiber Inc.

C. Single Source Responsibilities:
1. Obtain firestop systems for each kind of firestop and construction condition indicated from a single primary firestop systems manufacturer.
2. Provide primers and other secondary materials that are produced by or are specifically recommended by manufacturer of firestop materials to ensure compatibility of system.
3. Materials of different manufacture than allowed by tested and listed system shall not be intermixed in same firestop system or opening.

2.02 ASSEMBLIES

A. Description:
1. Firestop systems shall be used in locations including, but not limited to, following:
a. Penetrations through fire-resistance-rated floor and roof assemblies requiring protected openings including both empty openings and openings that contain penetrations.
b. Penetrations through fire-resistance-rated wall assemblies including both empty openings and openings that contain penetrations.
c. Membrane penetrations in fire-resistance-rated wall assemblies where items penetrate one side of barrier.
d. Joints in fire-resistance-rated assemblies to allow independent movement.
e. Perimeter fire barrier system between a rated floor/roof and an exterior wall assembly.
f. Joints, through penetrations and membrane penetrations in smoke barriers and smoke partitions.

B. Design Criteria:
1. Provide through-penetration firestop system designs prepared by a qualified specialty engineer in compliance with specified UL and ASTM Standards.
a. Walls: Provide approved firestop system tested in compliance with ASTM E814 with minimum positive pressure differential of 0.01” of water, having an F rating of not less than required fire-resistance rating of wall penetrated.
b. Horizontal Assemblies: Provide approved firestop system tested in compliance with ASTM E814 with minimum positive pressure differential of 0.01” of water, having an F rating and a T rating of not less than 1 hour but not less than required fire-resistance rating of floor penetrated.
c. Fire-Resistant Joint Systems: Provide systems tested in compliance with requirements of UL 2079, ASTM E1399, or ASTM E1966 with movement capabilities equal to those of anticipated conditions.
1). Test non-symmetrical wall joint systems with both faces exposed to furnace, with assigned fire-resistance being shorter duration of two tests.
2. Maintain barrier and structural floor fire resistance ratings including resistance to cold smoke at penetrations, connections with other surfaces or types of construction, at separations needed to permit building movement and sound or vibration absorption, and at other construction gaps.

3. Firestopping of penetrations through fire rated assemblies shall be used in specific locations as follows:
    a. Voids Around:
        1). Pipes, ducts, and conduits
        2). Cable trays
        3). Cables and wires
        4). Structural members
    b. Construction Joints:
        1). Intersection points between walls and floors, ceilings or rated roof systems
        2). Expansion joints
        3). Joints between curtain walls and floor or roof assemblies
        4). Between edges of floor slabs and exterior walls
        5). Between tops of walls and underside of floors
        6). In control joints in masonry walls and floors
4. Firestop system may not support live loads and traffic. Provide curbs or cover plates as may be needed to restrict or accommodate potential live loads and traffic.
    a. For floor penetrations exposed to possible loading and traffic, provide firestop systems capable of supporting floor loads involved either by installing floor plates or other means.
5. Provide firestop systems that are compatible with one another and with substrates under conditions of application and service, as demonstrated by manufacturer, based on testing and field experience.
    a. For piping penetrations for plumbing and wet pipe sprinkler systems provide moisture resistant through-penetration firestop systems.
6. For firestopping exposed to view, traffic, moisture, and physical damage provide products that after curing do not deteriorate when exposed to above-mentioned conditions both during and after construction.
7. Materials shall be suitable for firestopping and smoke seal of penetrations made by steel, glass, plastic, and insulated pipe. On insulated pipe, fire-rating classification shall not require removal of insulation.

C. Performance Criteria:
1. Firestop systems shall consist of a material, or combination of materials installed to retain integrity of fire-rated construction by maintaining an effective barrier against spread of flame, smoke, and/or hot gases through penetrations, blank openings, construction joints, or at perimeter fire containment in or adjacent to fire-rated barriers in compliance with requirements indicated, including but not limited to following:
    a. Provide firestop materials and systems that have been tested and approved by third party testing agency in compliance with ASTM E119 or UL 263.
    b. Firestop penetrations passing through fire resistance rated wall and floor assemblies and other locations as indicated on Drawings.
    c. F -Rated Through-Penetration Firestop Systems:

    Provide through-penetration firestop systems with F ratings indicated, as determined per ASTM E814, but not less than one hour or fire resistance rating of construction being penetrated.
    d. T -Rated Through-Penetration Firestop Systems:

    Provide firestop systems with T ratings, in addition to F ratings, as determined per ASTM E814, where indicated by code.
    e. L -Rated Through-Penetration Firestop Systems:

    Provide firestop systems with L ratings, in addition to F and T ratings, as determined per UL 1479, where indicated by code.
    f. W -Rated Through-Penetration Firestop Systems:

    Provide firestop systems with W Water Resistance ratings, in addition to F, T and L ratings, as determined per UL 1479, where indicated.
2. Perimeter Fire Containment Systems:

a. Provide interior perimeter joint systems with fire-resistance ratings indicated, as determined per ASTM E2307, but not less than fire resistance rating of floor construction.

3. Fire-Resistive Joints:

a. Provide joint systems with fire-resistance ratings indicated, as determined per UL 2079, but not less than fire-resistance rating of construction in which joint occurs.

4. Firestop systems shall comply with interior finish flame spread and smoke developed requirements, for area in which they are installed per ASTM E84.

5. Leakage Rating:

a. Firestop systems shall be tested and rated to function as an effective airtight seal preventing passage of smoke and gasses in normal as well as under exposure to heat and fir conditions.

6. Building Movement:

a. Firestop systems shall be suitable to withstand building movements, including thermal movements, loading deflections, shrinkage, creep, and other similar movements when tested in compliance with specified standards.

2.03 FIRESTOPPING MATERIALS

A. General Requirements:

1. Firestopping materials and systems shall be capable of closing or filling through-openings created by:

a. Burning or melting of combustible pipes, cable jacketing, or pipe insulation materials

b. Deflection of sheet metal due to thermal expansion (electrical and mechanical duct work)

2. Systems or devices listed in UL Fire Resistance Directory under categories XHCR and XHEZ may be used, providing they conform to construction type, penetrant type, annular space requirements, and fire rating involved in each separate instance, and that system be symmetrical for wall applications.

3. Systems shall be asbestos and lead free, and shall not require use of hazardous solvents.

4. System shall withstand passage of cold smoke as either an inherent property of system, or by use of a separate product included as a part of UL System or device, and designed to perform this function.

5. Firestopping materials shall not shrink upon drying, as evidenced by cracking or pulling back from contact surfaces.

6. Materials shall be moisture resistant, and shall not dissolve after curing.

7. Firestopping sealants shall be flexible, allowing for normal pipe movement.

8. Provide only firestop materials that are explicitly recommended by manufacturer for intended application, and which have been determined by tests to be totally compatible with adjoining construction and each other, as stated in manufacturer's published data or certified by manufacturer for each application.

B. Sealing Systems:

1. Systems listed by qualified testing agencies may be used providing they conform to construction type, penetrant type, annular space requirements and fire rating involved in each separate instance.

2. Firestop Units for Multi-Cable Penetrations:

a. Provide UL classified fill, void, and cavity firestop units, tested for requirements as follows:

1). Temperature Rating: Up to 2000°F

2). Air Leakage Test: Suitable for intended service; UL L rating tested

3). Blast Wall Application: 500 psi hydrostatic pressure

3. Sealing Plugs: Synthetic rubber

a. Material: Suitable for environment and service use

1) EPDM for use with water and gas

2) FRR (fire-resistant rubber) for use with water, gas and fire.

b. Pressure Resistance Rating: 15 psig at plug base; 30 psig at flange

c. Individual Sealing Plugs: Two identical plug pieces with one edge flanged, exterior serrated profile and interior compressible ridges

d. Multiple Sealing Plugs: Two to four plug pieces with one edge flanged, exterior serrated profile and interior compressible ridges

e. Multiple Passage Plugs And Individual Sealing Plugs:

1). Two identical plug pieces with one edge flanged, exterior serrated profile and interior compressible ridges.

2). Plugs shall allow for sealing of different cables and pipe through a single conduit opening by utilizing individual sealing plugs or blind plugs in respective openings in passage plug.

4. Modular Transit Barrier System:

a. Description: Self-compression modules, with rubber grade suitable for service and environment intended

1). EPDM for use with water and gas

2). FRR (fire-resistant rubber) for use with water, gas and fire.

b. Sealing modules shall not require use of nuts, bolts, or compression plates to achieve sealing.

c. Frames and materials shall comply with characteristics as follows:

1). Embedded Frames: Designed for embedment in concrete.

2). Flanged Frames: Designed for bolting or welding steel frames to surface of partition, including steel bulkheads and decks.

3). Split Flanged Frames: Designed for use in existing applications where cable or pipe has been previously installed.

4). Capacity: 1 to 35 cables in sizes from 3/16” to 5 1/2” in diameter, when used in conjunction with multiple passage or multiple sealing modules.

5). Frame Finish: Zinc chromate primer, hot-dip galvanized, and stainless steel as selected.

C. Firestop/Smoke Seal Sealant: Single component elastomeric

1. Walls and Overhead Applications: Gun Grade

2. Floor Applications: Self-leveling

3. Products:

a. 3M -CP-25 WB

b. A/D -Firebarrier Silicone

c. Hilti -CP 601S Elastomeric Firestop Sealant

d. Hilti -FS-ONE High Performance Intumescent Firestop Sealant

e. Nelson -ES1399

f. STI -SpecSeal PEN 300 Sealant

g. Tremco -FYRE-Sil

D. Firestop Mortar: Single component, dry, powdery blend that is mixed with water to form a pourable/trowelable material suitable for firestopping large openings in fire-rated floors and walls, requiring no supports or anchoring devices to pass water hose stream tests.

1. Products:

a. A/D -Firebarrier Mortar

b. Hilti -FS 635 Trowelable Firestop Compound

c. Nelson -CMP Mortar

d. STI -SpecSeal SSM Mortar

e. Tremco -TREMstop M

E. Firestop Putty: One-part, two-stage intumescent, non-hardening compound

1. Products:

a. 3M -Fire Barrier Moldable Putty

b. A/D –Fire barrier Seal

c. Hilti -CP 617 Firestop Putty Pads

d. Hilti -CP 618 Firestop Putty Stick

e. Nelson -FSP

f. STI -SpecSeal SSP100 Firestop Putty Bars and Pads

F. Firestop Joint Spray: Sprayable fire rated mastic for construction joints where maximum movement is needed

1. Fire Rating: Up to 2 hours

2. Product:

a. 3M -Fire Barrier Spray 100

b. Hilti -CP 672 Firestop Joint Spray

d. STI -SpecSeal Series AS200

e. Tremco -TREMstop Acrylic SP (sprayable grade)

G. Fire Safing Insulation: ASTM C612

1. Material: Mineral fiber

2. Facing: Unfaced

3. Properties

a. Density: 4 pcf minimum

b. Surface Burning Characteristics: ASTM E84

1). Flame Spread: 15

2). Smoke Developed: 0

c. Moisture Absorption: less than 1%

4. Products:

a. A/D -Firebarrier Mineral Wool

b. Fibrex -FBX Safing Insulation

c. Owens Corning -Safing Insulation/MW

d. Roxul -RXL Safe

e. Thermafiber -Safing Insulation

H. Firestop Spray Form: ASTM E814

1. Fire Rating: Up to 2 hours

a. 3M -Fire Barrier Rated Foam FIP 1-Step

2.04 ACCESSORIES

A. Provide components for each firestop system needed to install fill materials and to comply with specified performance requirements. Use only components specified by firestopping manufacturer and approved by UL for firestop system indicated.

1. Fill, Void, or Cavity Materials: As classified under category XHHW in UL Fire Resistance Directory

2. Forming Materials: As classified under category XHKU in UL Fire Resistance Directory

B. Provide related items as needed including, but not limited to:

1. Permanent forming/damming/backing materials, such as:

a. Slag wool fiber insulation

b. Foams or sealants used to prevent leakage of fill materials in liquid state

c. Fire rated form board

d. Polyethylene/polyurethane backer rods

e. Rigid polystyrene backer board

2. Temporary forming materials

3. Substrate primers

4. Steel sleeves

2.05 MIXING

A. Comply with firestopping manufacturer's written instructions mixing before application for accurate proportioning of materials, water (if required), type of mixing equipment, selection of mixer speeds,

mixing containers, mixing times, and other items and procedures needed to produce products of uniform quality with optimum performance characteristics for application indicated.

PART 3 - EXECUTION

3.01 EXAMINATION

A. Site Verification of Conditions:

1. Examine openings, voids, and joints where firestop systems are to be installed; verify they are in compliance with manufacturer's requirements.
    a. Verify that field dimensions are as shown on Drawings and as recommended by manufacturer.
    b. Verify that clips, piping, hangers, supports, sleeves, and other items needed to penetrate firestopping materials are in place.
2. Surfaces shall be dry and frost free.
3. Ducts, piping, equipment, and other similar items that would interfere with application of firestopping shall be in place.
4. Do not proceed until unsatisfactory conditions have been corrected.
5. Commencement of installation constitutes acceptance of conditions and responsibility for satisfactory performance.

3.02 PREPARATION

A. Protection of In-Place Construction:

1. Provide masking and drop cloths to prevent firestopping from contaminating adjacent surfaces. Remove masking materials promptly following product application.
2. Use masking tape to prevent firestopping from contacting adjoining surfaces that will remain exposed upon completion of Work. Remove tape as soon as it is possible to do so without disturbing firestopping seal with substrates.

B. Surface Preparation:

1. Clean substrate of dirt, dust, grease, oil, loose material, or other matter that may affect bond of firestopping.
2. Remove incompatible materials that affect bond by scraping, brushing, scrubbing, or abrasive grit blasting.
3. Do not apply firestopping materials to surfaces which have been previously painted or treated with a sealer, curing compound, water repellent, or other similar coating, unless application has been accepted by manufacturer of firestopping products.
4. Install damming materials, as recommended by sealant manufacturer, to hold sealant in place.

C. Priming:

1. Prime substrates where recommended by firestopping manufacturer using manufacturer's recommended products and methods.
2. Confine primers to areas of bond. Do not allow spillage and migration onto exposed surfaces.
3. Apply prime coat in compliance with manufacturer's instructions.

3.03 APPLICATION

A. General Requirements:

1. Firestopping system installation shall be by a single primary installer.
2. Provide firestopping for conditions specified whether or not firestopping is indicated, and if indicated, whether such material is designed as insulation, safing, or otherwise.
    a. Firestopping shall be installed in open penetrations and in annular space in penetrations in bearing or non-bearing fire-rated barrier.
    b. Firestopping shall be provided at construction joints/gaps:
        1). between the edges of floor slabs and exterior walls
        2). between the tops of walls and the underside of floors
        3). in the control joint in masonry walls and floors
        4). in expansion joints
3. Apply firestopping in sufficient thickness to achieve rating, with as many passes as needed to

cover with a monolithic blanket of uniform density and texture. Seal holes or voids made without penetrations to ensure an effective smoke barrier.

4. Where floor openings without penetration items are more than 4” in width and subject to traffic or loading install materials capable of supporting same loading as floor. Protect materials from damage on surfaces subject to traffic.
5. Firestop mechanical and electrical service through penetrations to formed, sleeved, or cored openings in fire rated floors, walls, and ceilings. Place firestopping in annular space around fire dampers before installation of damper’s anchoring flanges.
6. Where large openings are created in walls or floors to permit installation of pipes, ducts, cable trays, bus duct, or other similar items, close unused portions of opening with firestopping material tested for application.
7. Firestopping shall be applied to control joints in rated walls, floors, ceilings, and to head and jambs of fire rated or smoke assemblies.
8. Where rated walls are constructed with horizontally continuous air space, double width masonry, or double stud frame construction, provide vertical 12” wide fiber dams for full thickness and height of air cavity at maximum 15’ intervals.
9. Do not cover up materials until proper curing has taken place.
10. Do not proceed to enclose fire stops with other construction until Site Quality Control inspections have verified that installation complies with specified requirements.
    a. Where deficiencies are found, repair or replace firestopping so that it complies with requirements of tested and listed system design at no cost to Owner.

B. Penetration Firestops:

1. Comply with through-penetration firestop manufacturer's installation instructions and drawings pertaining to products and applications indicated using proven techniques to produce following results:
    a. Completely fill voids and cavities formed by openings, forming materials, accessories, and penetrating items.
    b. Install materials so they contact and adhere to substrates formed by openings and penetrating items.
    c. For fill materials that will remain exposed after completing Work, finish to produce smooth, uniform surfaces.
2. Coordinate with other trades to assure that pipes, conduit, cable, and other items, that penetrate fire rated construction, have been permanently installed prior to installation of firestop assemblies.
3. Schedule work to assure that partitions and other construction that conceals penetrations are not erected prior to installation of firestop and smoke seals.

C. Firestop Joint Systems:

1. Comply with firestop manufacturer's installation instructions and drawings pertaining to products and applications indicated using proven techniques that result in firestop materials:
    a. Directly contacting and fully wetting joint substrates
    b. Completely filling recesses provided for each joint configuration
    c. Providing uniform, cross-sectional shapes and depths relative to joint width that optimize movement capability
2. Install joint fillers to provide support of firestop materials during application and at position needed to produce cross-sectional shapes and depths of installed firestop material relative to joint widths that allow optimum sealant movement capability and develop fire-resistance rating required.
3. Tool non-sag firestop materials immediately after their application and prior to time skinning or begins. Form smooth, uniform beads of configuration indicated or needed to:
    a. Produce fire-resistance rating
    b. Eliminate air pockets
    c. Ensure contact and adhesion with sides of joint

D. Perimeter Fire Barrier Systems:

1. Comply with firestop manufacture’s installation instructions and drawings pertaining to products and applications indicated.

2. Install metal framing, curtain wall insulation, mechanical attachments, safing materials and firestop materials as applicable within system design.

3.04 INSTALLATION

A. Firestop/Smoke Seal Sealant: Through-penetrations where movement occurs.

1. Sealant shall be applied using manual or powered caulking gun.
2. Surface of gun grade sealant can be tooled with water.

B. Firestop Mortar: Static (non-moving) through-penetrations.

1. Mixing:
   a. Mix in a mechanical mixer with paddle blades or ribbon blades.
   b. For small quantities, mix in a clean container suitable for use intended.
   c. Mixing time shall be 3 minutes, minimum; 5 minutes maximum.
2. Application:
   a. Do not apply if ambient temperature or substrate is less than 35°F during initial 24 hour period following application.
   b. Wet surfaces prior application of mortar with water. Mortar may be pumped or hand applied into openings.
   c. Exposed surfaces shall be finished with using conventional plastering tools prior to curing.
   d. Apply pressure to trowled edges to ensure a tight bond.
3. Curing:
   a. Forms, when used to contain mortar, shall be left in place 12 to 48 hours until mortar reaches its initial cure. Allow 27 days for mortar to reach full cure.

C. Firestop Putty:

1. Install putty by hand packing into penetration. Work putty into and against contact surfaces to depths as needed for proper installation; approximately 1”.
2. Where possible, space penetrants adequately to allow putty to be packed into voids and assure a good smoke seal.

D. Firestop Joint Spray:

1. Install fire safing insulation as a back filling material.
2. Apply joint spray to depth needed to obtain required rating. Make certain that spray contacts all surfaces and overlaps 1/2” beyond surrounding surfaces.
3. Allow applied joint spray to cure for 5 to 7 days.

E. Fire Safing Insulation:

1. Install safing insulation of proper size in safe-off area between curtain wall and floor slab leaving no voids.
   a. Cut sections of safing insulation to a width equal to thickness of floor and stack to a thickness that is not less than 25% greater than width of linear gap.
   b. Compress and insert safing insulation, cut edge first, into linear gap such that top and bottom surfaces are flush with surfaces of floor assembly.
   c. Length of safing insulation shall be equal to on-center spacing of framing. Friction-fit safing insulation between framing and mounting angles. A maximum of one tightly-butted seam shall be permitted between framing.
   d. Friction-fit additional pieces of safing insulation between framing mounting clips and each framing member location.
2. Safing shall be held in place on safing clips spaced at intervals not exceeding 24” on center. Provide not less than three clips per 48” batt.
3. Cut safing wider than opening to ensure compression fit. Compress or install on wire hangers in floor slab openings to completely seal around telephone cables, ducts, piping, or other utilities.
4. At slab perimeters, safing shall be topped of with 1/2” layer of firestop sealant.

3.05 SITE QUALITY CONTROL

A. Testing Laboratory Services:

1. Inspection agency shall monitor and examine fire stops in compliance with ASTM E2174 and

ASTM E2393.

2. Prepare a written report of inspections and tests; report results, both successful and unsuccessful. In addition to results, report shall include project name, and name of Contractor.

   a. Inspection reports shall be delivered to Owner, Architect, and Contractor within one working day following inspections and not more than 3 days following testing.

B. Site Testing and Inspections:

1. Inspection service shall perform continuous on-site inspection of penetration firestopping, fire-resistive joint, and perimeter fire barrier installations to determine that fire stops have been installed in compliance with requirements of tested and listed firestop system, and installation process conforms to FM 4991 or UL Qualified Firestop Contractor Program.

2. Verify that firestopping systems have been constructed in compliance with submitted designs for fire rating required by Contract Documents and are acceptable to authorities having jurisdiction.

3. Verify that proper, specified materials have been used in fire stops.

   a. Visually inspect substrates before installation of firestopping to ascertain that preparation has been performed in compliance with manufacturer's recommendations and Contract Documents.

   b. Visually inspect completed assembly, including removal of damming materials, if used, to ensure an adequate fire and smoke seal.

C. Manufacturer's Field Service:

1. Manufacturer shall provide on-site inspections, technical assistance and guidance for application of penetration firestopping, fire-resistive joint, and perimeter fire barrier installations.

   a. At start of installation, periodically as Work progresses, and after completion, furnish services of technical representative to advice on every phase of firestopping installations.

   b. Manufacturer's field service, at a minimum, shall provide technical representative attendance during first day of installation of each major type of firestop material and furnish technical assistance and guidance to installers as may be needed.

2. Verify that systems have been installed in compliance with manufacturer's requirements.

D. Field Identification of Through-Penetration Firestop Systems:

1. Provide an identification tag attached to each through-penetration firestop system to identify month and year of installation, name of manufacturer and firestop material, name of testing agency and tested firestop system identification, and words, RATED THROUGH-PENETRATION FIRESTOP SYSTEM DO NOT DISTURB.

2. Identification Tags:

   a. Provide identification on melamine plastic or brass tags, either engraved on red plastic tags with white characters in one or both faces, or stamped on brass tags with clear protective coating with self-adhesive that is suitable for substrate and causes partial tag destruction if removal is attempted.

   b. Secure tag to a penetrant item with a snug compression-fit plastic or brass wire tie in visible location suitable for inspection within 6" of firestop system and not more than 50 feet intervals along system length.

3.06 `CLEANING

A. General Requirements:

1. Remove excess material, droppings, and debris.

2. Remove firestopping materials from surfaces not to be fireproofed.

B. Firestop/Smoke Seal Sealant:

1. Clean sealant within 10 minutes using a rag dampened with either water or xylol.

C. Firestop Mortar:

1. Wet materials shall be cleaned with water.

2. Dried or cured mortar shall be scrapped or chipped to remove.

3.07 PROTECTION

A. Protect firestopping during and after curing period from contact with contaminating substances.

PART 1 - GENERAL

1.01 RELATED DOCUMENTS

A. Drawings and general provisions of the Contract, including General and Supplementary Conditions and Division 01 Specification Sections, apply to this Section.

1.02 SUMMARY

A. Section includes:

1. Sealants and caulking of all new exterior and interior joints as indicated and as required to maintain total waterproof integrity of joints.
2. Acoustical joint sealants.

1.03 SUBMITTALS

A. Product Data: For each joint-sealant product indicated.

B. Samples: For each kind and color of joint sealant required.

C. Joint-Sealant Schedule: Include the following information:

1. Joint-sealant application, joint location, and designation.
2. Joint-sealant manufacturer and product name.
3. Joint-sealant formulation.
4. Joint-sealant color.

D. Product test reports.

1.04 QUALITY ASSURANCE

A. Testing Agency Qualifications: Qualified according to ASTM C1021 to conduct the testing indicated.

B. Manufacturer Qualifications: Company specializing in manufacturing the Products specified in this section with minimum five years documented experience.

C. Applicator Qualifications: Company specializing in performing the work of this section with minimum three years experience.

1.05 WARRANTY

A. Special Installer's Warranty: Manufacturer's standard form in which Installer agrees to repair or replace joint sealants that do not comply with performance and other requirements specified in this Section within specified warranty period.

1. Warranty Period: Two years from date of Substantial Completion.

B. Special Manufacturer's Warranty: Manufacturer's standard form in which joint-sealant manufacturer agrees to furnish joint sealants to repair or replace those that do not comply with performance and other requirements specified in this Section within specified warranty period.

1. Warranty Period: 10 years from date of Substantial Completion.

1.06 MOCK-UP

A. Provide mock-up of sealant joints.

B. Construct mock-up with specified sealant types.

C. Locate where directed.

D. Mock-up may remain as part of the Work.

1.07 FIELD CONDITIONS

A. Maintain temperature and humidity recommended by the sealant manufacturer during and after installation.

PART 2 - PRODUCTS

2.01 MATERIALS, GENERAL

A. VOC Content of Interior Sealants: Sealants and sealant primers used inside the weatherproofing system shall comply with the following limits for VOC content when calculated according to 40 CFR 59, Subpart D (EPA Method 24):

1. Architectural Sealants: 250 g/L.
2. Sealant Primers for Nonporous Substrates: 250 g/L.
3. Sealant Primers for Porous Substrates: 775 g/L.

B. Low-Emitting Interior Sealants: Sealants and sealant primers used inside the weatherproofing system shall comply with the testing and product requirements of the California Department of Health Services' "Standard Practice for the Testing of Volatile Organic Emissions from Various Sources Using Small-Scale Environmental Chambers."

C. Liquid-Applied Joint Sealants: Comply with ASTM C920 and other requirements indicated for each liquid-applied joint sealant specified, including those referencing ASTM C920 classifications for type, grade, class, and uses related to exposure and joint substrates.

1. Suitability for Immersion in Liquids. Where sealants are indicated for joints that will be continuously immersed in liquids, provide products that have undergone testing according to ASTM C1247. Liquid used for testing sealants is deionized water, unless otherwise indicated.

D. Stain-Test-Response Characteristics: Where sealants are specified to be nonstaining to porous substrates, provide products that have undergone testing according to ASTM C1248 and have not stained porous joint substrates indicated for Project.

E. Suitability for Contact with Food: Where sealants are indicated for joints that will come in repeated contact with food, provide products that comply with 21 CFR 177.2600.

2.02 SILICONE JOINT SEALANTS

A. Mildew-Resistant Neutral-Curing Silicone Joint Sealant: ASTM C920.

1. Manufacturers: Subject to compliance with requirements, available manufacturers offering products that may be incorporated into the Work include, but are not limited to, the following:
   a. BASF Building Systems.
   b. Dow Corning Corporation.
   c. GE Advanced Materials - Silicones.
   d. Pecora Corporation.
   e. Tremco Incorporated.
2. Type: Single component (S).
3. Grade: Nonsag (NS).
4. Class: 25.
5. Uses Related to Exposure: Nontraffic (NT).

2.03 URETHANE JOINT SEALANTS

A. Urethane Joint Sealant: ASTM C920.

1. Manufacturers: Subject to compliance with requirements, available manufacturers offering products that may be incorporated into the Work include, but are not limited to, the following:
   a. BASF Building Systems.
   b. Bostik, Inc.
   c. Pecora Corporation.
   d. Tremco Incorporated.
2. Type: Multicomponent (M).
3. Grade: Pourable (P) or Nonsag (NS).
4. Class: 25.
5. Uses Related to Exposure: Traffic (T) or Nontraffic (NT).

2.04 LATEX JOINT SEALANTS

A. Latex Joint Sealant: Acrylic latex or siliconized acrylic latex, ASTM C 834, Type OP, Grade NF.

1. Manufacturers: Subject to compliance with requirements, available manufacturers offering products that may be incorporated into the Work include, but are not limited to, the following:
   a. BASF Building Systems.
   b. Bostik, Inc.
   c. Pecora Corporation.
   d. Tremco Incorporated.

2.05 PREFORMED JOINT SEALANTS

A. Preformed Foam Joint Sealant: Manufacturer's standard preformed, precompressed, open-cell foam sealant manufactured from urethane foam with minimum density of 10 lb/cu. ft. and impregnated with a nondrying, water-repellent agent. Factory produce in precompressed sizes in roll or stick form to fit joint widths indicated; coated on one side with a pressure-sensitive adhesive and covered with protective wrapping.

2.06 ACOUSTICAL JOINT SEALANTS

A. Acoustical Joint Sealant: Manufacturer's standard nonsag, paintable, nonstaining latex sealant complying with ASTM C 834. Product effectively reduces airborne sound transmission through perimeter joints and openings in building construction as demonstrated by testing representative assemblies according to ASTM E90.

1. Manufacturers: Subject to compliance with requirements, available manufacturers offering products that may be incorporated into the Work include, but are not limited to, the following:
    a. Pecora Corporation; AC-20 FTR.
    b. Specified Technologies, Inc.; Smoke N Sound Acoustical Sealant.
    c. USG Corporation; SHEETROCK Acoustical Sealant.
2. Apply acoustical joint sealants where indicated and as specified in other Division 09 Sections.

2.07 JOINT SEALANT BACKING

A. Cylindrical Sealant Backings: ASTM C 1330, Type C (closed-cell material with a surface skin), and of size and density to control sealant depth and otherwise contribute to producing optimum sealant performance.

B. Bond-Breaker Tape: Polyethylene tape or other plastic tape recommended by sealant manufacturer.

2.08 MISCELLANEOUS MATERIALS

A. Primer: Material recommended by joint-sealant manufacturer where required for adhesion of sealant to joint substrates indicated, as determined from preconstruction joint-sealant-substrate tests and field tests.

B. Cleaners for Nonporous Surfaces: Chemical cleaners acceptable to manufacturers of sealants and sealant backing materials.

C. Masking Tape: Nonstaining, nonabsorbent material compatible with joint sealants and surfaces adjacent to joints.

PART 3 - EXECUTION

3.01 PREPARATION

A. Surface Cleaning of Joints: Clean out joints immediately before installing joint sealants to comply with joint-sealant manufacturer's written instructions.

1. Remove laitance and form-release agents from concrete.
2. Clean nonporous joint substrate surfaces with chemical cleaners or other means that do not stain, harm substrates, or leave residues capable of interfering with adhesion of joint sealants.

B. Joint Priming: Prime joint substrates where recommended by joint-sealant manufacturer or as indicated by preconstruction joint-sealant-substrate tests or prior experience. Apply primer to comply with joint-sealant manufacturer's written instructions. Confine primers to areas of joint-sealant bond; do not allow spillage or migration onto adjoining surfaces.

C. Masking Tape: Use masking tape where required to prevent contact of sealant or primer with adjoining surfaces that otherwise would be permanently stained or damaged by such contact or by cleaning methods required to remove sealant smears. Remove tape immediately after tooling without disturbing joint seal.

3.02 INSTALLATION

A. Sealant Installation Standard: Comply with recommendations in ASTM C 1193 for use of joint sealants as applicable to materials, applications, and conditions indicated.

B. Install sealant backings of kind indicated to support sealants during application and at position required to produce cross-sectional shapes and depths of installed sealants relative to joint widths that allow optimum sealant movement capability.

1. Do not leave gaps between ends of sealant backings.
2. Do not stretch, twist, puncture, or tear sealant backings.

3. Remove absorbent sealant backings that have become wet before sealant application and replace them with dry materials.

C. Install bond-breaker tape behind sealants where sealant backings are not used between sealants and backs of joints.

D. Install sealants using proven techniques that comply with the following and at the same time backings are installed:

1. Place sealants so they directly contact and fully wet joint substrates.

2. Completely fin recesses in each joint configuration.

3. Produce uniform, cross-sectional shapes and depths relative to joint widths that allow optimum sealant movement capability.

E. Tooling of Nonsag Sealants: Immediately after sealant application and before skinning or curing begins, tool sealants according to requirements specified in subparagraphs below to form smooth, uniform beads of configuration indicated; to eliminate air pockets; and to ensure contact and adhesion of sealant with sides of joint.

1. Remove excess sealant from surfaces adjacent to joints.

2. Use tooling agents that are approved in writing by sealant manufacturer and that do not discolor sealants or adjacent surfaces.

3. Provide concave joint profile per Figure BA in ASTM C1193, unless otherwise indicated.

F. Acoustical Sealant Instillation: Comply with ASTM C919 and with manufacturer's written recommendations.

G. Clean off excess sealant or sealant smears adjacent to joints as the Work progresses by methods and with cleaning materials approved in writing by manufacturers of joint sealants and of products in which joints occur.

3.03 CURING

A. Cure sealants in accordance with manufacturer's printed instructions to obtain high early bond strength, internal cohesive strength, and durability.

B. If finished sealant has bubbles or other defects, replace sealant and backing.

3.04 PROTECTION AND CLEANING

A. Protect adjacent surfaces against stains, smears, and other damage during the sealant application.

B. Immediately clean and remove droppings, smears, and other soiling caused by sealant application. Use solvents and cleaning agents recommended by sealant manufacturer. Use in accordance with solvent and cleaning agent manufacturer's instructions. Leave no stain, damage, or discoloration on surfaces.

3.05 SCHEDULE

A. Exterior Joints:

1. Joints in vertical surfaces and horizontal nontraffic surfaces:

a. Joint Locations:

1). Construction joints in cast-in-place concrete.

2). Joints between plant-precast architectural concrete units.

3). Control and expansion joints in unit masonry.

4). Joints in dimension stone cladding.

5). Joints in glass unit masonry assemblies.

6). Joints in exterior insulation and finish systems.

7). Joints between metal panels.

8). Joints between different materials listed above.

9). Perimeter joints between materials listed above and frames of doors windows and louvers.

10). Control and expansion joints in ceilings and other overhead surfaces.

11). Other joints as indicated.

b. Multicomponent Nonsag Urethane Sealant.

c. Color: To match adjacent material.

2. Joints in horizontal surfaces subject to traffic:

a. Joint Locations:

1). Control and expansion joints in brick pavers.
2). Isolation and contraction joints in cast-in-place concrete slabs.
3). Joints between plant-precast architectural concrete paving units.
4). Joints in stone paving units, including steps.
5). Tile control and expansion joints.
6). Joints between different materials listed above.
7). Other joints as indicated.

b. Multicomponent Pourable Urethane Sealant.

c. Color: To match adjacent material.

3. Joints at glazed openings to be in accordance with recommendation of glazing and frame manufacturers and as follows:

a. One-Part Nonacidic Curing Silicone Sealant.

B. Interior Joints:

1. Joints in vertical surfaces and horizontal nontraffic surfaces, except in areas exposed to moisture:

a. Joint Locations:

1). Control and expansion joints on exposed interior surfaces of exterior walls.
2). Perimeter joints of exterior openings where indicated.
3). Tile control and expansion joints.
4). Vertical joints on exposed surfaces of interior unit masonry concrete walls and partitions.
5). Joints on underside of plant-precast structural concrete beams and planks.
6). Perimeter joints between interior wall surfaces and frames of interior doors windows and elevator entrances.
7). Other joints as indicated.

b. Latex Sealant.

c. Color: To match adjacent material.

2. Joints in areas exposed to moisture and where plumbing fixtures meet adjacent floor and wall finishes:

a. Silicone-Emulsion Sealant.

b. Color: To match adjacent material.

3. Joints in horizontal surfaces subject to traffic:

a. Joint Locations:

1). Isolation joints in cast-in-place concrete slabs.
2). Control and expansion joints in stone flooring.
3). Control and expansion joints in brick flooring.
4). Control and expansion joints in tile flooring.
5). Other joints as indicated.

b. Multicomponent Pourable Urethane Sealant.

c. Color: To match adjacent material.

END OF SECTION

----------THIS PAGE LEFT INTENTIONALLY BLANK----------

PART 1 - GENERAL

1.01 RELATED DOCUMENTS

A. Drawings and general provisions of the Contract, including General and Supplementary Conditions and Division 01 Specification Sections, apply to this Section.

1.02 SUMMARY

A. Section Includes:

1. Standard and custom hollow metal doors and frames.
2. Steel sidelight, borrowed lite and transom frames.
3. Louvers installed in hollow metal doors.
4. Light frames and glazing installed in hollow metal doors.

B. Related Sections:

1. Division 04 Section "Unit Masonry" for embedding anchors for hollow metal work into masonry construction.
2. Division 08 Section “Flush Wood Doors”.
3. Division 08 Section "Glazing" for glass view panels in hollow metal doors.
4. Division 08 Section "Door Hardware".
5. Division 09 Section "Painting" for field painting hollow metal doors and frames.

C. Codes and References: Comply with the version year adopted by the Authority Having Jurisdiction.

1. ANSI/SDI A250.8 - Recommended Specifications for Standard Steel Doors and Frames.
2. ANSI/SDI A250.4 - Test Procedure and Acceptance Criteria for Physical Endurance for Steel Doors, Frames, Frames Anchors and Hardware Reinforcing.
3. ANSI/SDI A250.6 - Recommended Practice for Hardware Reinforcing on Standard Steel Doors and Frames.
4. ANSI/SDI A250.10 - Test Procedure and Acceptance Criteria for Prime Painted Steel Surfaces for Steel Doors and Frames.
5. ANSI/SDI A250.11 - Recommended Erection Instructions for Steel Frames.
6. ASTM A1008 - Standard Specification for Steel Sheet, Cold-Rolled, Carbon, Structural, High-Strength Low-Alloy and High-Strength Low-Alloy with Improved Formability.
7. ASTM A653 - Standard Specification for Steel Sheet, Zinc-Coated (Galvanized) or Zinc-Iron Alloy-Coated (Galvannealed) by the Hot-Dip Process.
8. ASTM A924 - Standard Specification for General Requirements for Steel Sheet, Metallic-Coated by the Hot-Dip Process.
9. ASTM C 1363 - Standard Test Method for Thermal Performance of Building Assemblies by Means of a Hot Box Apparatus.
10. ANSI/BHMA A156.115 - Hardware Preparation in Steel Doors and Frames.
11. ANSI/SDI 122 - Installation and Troubleshooting Guide for Standard Steel Doors and Frames.
12. ANSI/NFPA 80 - Standard for Fire Doors and Fire Windows; National Fire Protection Association.
13. ANSI/NFPA 105: Standard for the Installation of Smoke Door Assemblies.
14. NFPA 252 - Standard Methods of Fire Tests of Door Assemblies; National Fire Protection Association.
15. UL 10C - Positive Pressure Fire Tests of Door Assemblies.
16. UL 1784 - Standard for Air Leakage Tests of Door Assemblies.

1.03 SUBMITTALS

A. Product Data: For each type of product indicated. Include construction details, material descriptions, core descriptions, hardware reinforcements, profiles, anchors, fire-resistance rating, and finishes.

B. Door hardware supplier is to furnish templates, template reference number and/or physical hardware to the steel door and frame supplier in order to prepare the doors and frames to receive the finish hardware items.

C. Shop Drawings: Include the following:

1. Elevations of each door design.
2. Details of doors, including vertical and horizontal edge details and metal thicknesses.
3. Frame details for each frame type, including dimensioned profiles and metal thicknesses.
4. Locations of reinforcement and preparations for hardware.
5. Details of anchorages, joints, field splices, and connections.
6. Details of accessories.
7. Details of moldings, removable stops, and glazing.
8. Details of conduit and preparations for power, signal, and control systems.

D. Samples for Verification:

1. Samples are only required by request of the architect and for manufacturers that are not current members of the Steel Door Institute.

1.04 QUALITY ASSURANCE

A. Source Limitations: Obtain hollow metal doors and frames through one source from a single manufacturer wherever possible.

B. Quality Standard: In addition to requirements specified, comply with ANSI/SDI A250.8, latest edition, "Recommended Specifications for Standard Steel Doors and Frames".

C. Fire-Rated Door Assemblies: Assemblies complying with NFPA 80 that are listed and labeled by a qualified testing agency, for fire-protection ratings indicated, based on testing at positive pressure according to NFPA 252 (neutral pressure at 40” above sill) or UL 10C.

1. Oversize Fire-Rated Door Assemblies Construction: For units exceeding sizes of tested assemblies, attach construction label certifying doors are built to standard construction requirements for tested and labeled fire rated door assemblies except for size.
2. Temperature-Rise Limit: Where indicated and at vertical exit enclosures (stairwell openings) and exit passageways, provide doors that have a maximum transmitted temperature end point of not more than 450°F (250°C) above ambient after 30 minutes of standard fire-test exposure.
3. Smoke Control Door Assemblies: Comply with NFPA 105.
    a. Smoke "S" Label: Doors to bear “S” label, and include smoke and draft control gasketing applied to frame and on meeting stiles of pair doors.

D. Fire-Rated, Borrowed-Light Frame Assemblies: Assemblies complying with NFPA 80 that are listed and labeled, by a testing and inspecting agency acceptable to authorities having jurisdiction, for fire-protection ratings indicated, based on testing according to NFPA 257. Provide labeled glazing material.

E. Pre-Submittal Conference: Conduct conference in compliance with requirements in Division 01 Section "Project Meetings" with attendance by representatives of Supplier, Installer, and Contractor to review proper methods and procedures for installing hollow metal doors and frames and to verify installation of electrical knockout boxes and conduit at frames with electrified or access control hardware.

1.05 DELIVERY, STORAGE, AND HANDLING

A. Deliver hollow metal work palletized, wrapped, or crated to provide protection during transit and Project site storage. Do not use non-vented plastic.

B. Deliver welded frames with two removable spreader bars across bottom of frames, tack welded to jambs and mullions.

C. Store hollow metal work under cover at Project site. Place in stacks of five units maximum in a vertical position with heads up, spaced by blocking, on minimum 4-inch high wood blocking. Do not store in a manner that traps excess humidity.

1. Provide minimum 1/4-inch space between each stacked door to permit air circulation. Door and frames to be stacked in a vertical upright position.

1.06 PROJECT CONDITIONS

A. Field Measurements: Verify actual dimensions of openings by field measurements before fabrication.

1.07 COORDINATION

A. Coordinate installation of anchorages for hollow metal frames. Furnish setting drawings, templates, and directions for installing anchorages, including sleeves, concrete inserts, anchor bolts, and items with integral anchors. Deliver such items to Project site in time for installation.

1.08 WARRANTY

A. Special Warranty: Manufacturer's standard form in which manufacturer agrees to repair or replace doors

that fail in materials or workmanship within specified warranty period.

B. Warranty includes installation and finishing that may be required due to repair or replacement of defective doors.

PART 2 - PRODUCTS

2.01 MANUFACTURERS

A. Manufacturers: Subject to compliance with requirements, provide products by one of the following:

1. CECO Door Products.
2. Curries Company.

2.02 MATERIALS

A. Cold-Rolled Steel Sheet: ASTM A 1008/A 1008M, Commercial Steel (CS), Type B; suitable for exposed applications.

B. Metallic-Coated Steel Sheet: ASTM A 653/A 653M, Commercial Steel (CS), Type B; with minimum G60 (Z180) or A60 (ZF180) metallic coating.

C. Frame Anchors: ASTM A 653/A 653M, Commercial Steel (CS), Commercial Steel (CS), Type B; with minimum G60 (Z180) or A60 (ZF180) metallic coating.

2.03 HOLLOW METAL DOORS

A. General: Provide 1-3/4 inch doors of design indicated, not less than thickness indicated; fabricated with smooth surfaces, without visible joints or seams on exposed faces unless otherwise indicated. Comply with ANSI/SDI A250.8 and ANSI/NAAMM HMMA 867.

B. Exterior Doors (Energy Efficient): Face sheets fabricated of commercial quality hot-dipped zinc coated steel that complies with ASTM A924 A60. Provide doors complying with requirements indicated below by referencing ANSI/SDI A250.8 for level and model, ANSI/SDI A250.4 for physical performance level, and HMMA 867 for door construction.

1. Design: Flush panel.
2. Core Construction: Foamed in place polyurethane and steel stiffened laminated core with no stiffener face welds, in compliance with HMMA 867 “Laminated Core”.
    a. Provide 22 gauge steel stiffeners at 6 inches on-center internally welded at 5" on- center to integral core assembly, foamed in place polyurethane core chemically bonded to all interior surfaces. No stiffener face welding is permitted.
    b. Thermal properties to rate at a fully operable minimum U-Factor 0.29 and R-Value 3.4, including insulated door, thermal-break frame and threshold.
        1). Kerf Type Frames: Thermal properties to rate at a fully operable minimum U-Factor 0.36 and R-Value 2.7, including insulated door, kerf type frame, and threshold.
3. Level/Model: Level 2 and Physical Performance Level A (Heavy Duty), Minimum 18 gauge (0.042 inch - 1.1-mm) thick steel, Model 2.
4. Vertical Edges: Vertical edges to be mechanically interlocked with hairline seam. Beveled Lock Edge, 1/8 inch in 2 inches (3 mm in 50 mm).
5. Top and Bottom Edges: Reinforce tops and bottoms of doors with a continuous steel channel not less than 16 gauge, extending the full width of the door and welded to the face sheet. Doors with an inverted top channel to include a steel closure channel, screw attached, with the web of the channel flush with the face sheets of the door. Plastic or composite channel fillers are not acceptable.
6. Hinge Reinforcement: Minimum 7 gauge (3/16") plate 1-1/4" x 9".
7. Hardware Reinforcements: Fabricate according to ANSI/SDI A250.6 with reinforcing plates from same material as door face sheets.

C. Exterior Doors: Face sheets fabricated of commercial quality hot-dipped zinc coated steel that complies with ASTM A 653/A 653M, Coating Designation A60. Provide doors complying with requirements indicated below by referencing ANSI/SDI A250.8 for level and model and ANSI/SDI A250.4 for physical performance level:

1. Design: Flush panel.
2. Level/Model: Level 2 and Physical Performance Level B (Heavy Duty), Minimum 18 gauge (0.042-inch - 1.0-mm) thick steel, Model 2.
3. Top and Bottom Edges: Reinforce tops and bottoms of doors with a continuous steel channel not

less than 16 gauge, extending the full width of the door and welded to the face sheet. Doors with an inverted top channel to include a steel closure channel, screw attached, with the web of the channel flush with the face sheets of the door. Plastic or composite channel fillers are not acceptable.

4. Hinge Reinforcement: Minimum 7 gauge (3/16") plate 1-1/4" x 9" or minimum 14 gauge continuous channel with pierced holes, drilled and tapped.

5. Hardware Reinforcements: Fabricate according to ANSI/SDI A250.6 with reinforcing plates from same material as door face sheets.

D. Interior Doors: Face sheets fabricated of commercial quality cold rolled steel that complies with ASTM A 1008/A 1008M. Provide doors complying with requirements indicated below by referencing ANSI/SDI A250.8 for level and model and ANSI/SDI A250.4 for physical performance level:

1. Design: Flush panel.

a. Fire Door Core: As required to provide fire-protection and temperature-rise ratings indicated.

2. Level/Model: Level 2 and Physical Performance Level B (Heavy Duty), Minimum 18 gauge (0.042-inch - 1.0-mm) thick steel, Model 2.

3. Top and Bottom Edges: Reinforce tops and bottoms of doors with a continuous steel channel not less than 16 gauge, extending the full width of the door and welded to the face sheet.

4. Hinge Reinforcement: Minimum 7 gauge (3/16") plate 1-1/4" x 9" or minimum 14 gauge continuous channel with pierced holes, drilled and tapped.

5. Hardware Reinforcements: Fabricate according to ANSI/SDI A250.6 with reinforcing plates from same material as door face sheets.

E. Manufacturers Basis of Design:

1. CECO Door Products Energy Efficient: Trio-E Series.

2.04 HOLLOW METAL FRAMES

A. General: Comply with ANSI/SDI A250.8 and with details indicated for type and profile.

B. Thermal Break Frames: Subject to the same compliance standards and requirements as standard hollow metal frames, provide where indicated thermally broken frame profiles available for use in both masonry and drywall construction. Fabricate with positive 3/8" vinyl thermal break and integral vinyl weatherstripping.

C. Exterior Frames: Fabricated of hot-dipped zinc coated steel that complies with ASTM A 653/A 653M, Coating Designation A60.

1. Fabricate frames with mitered or coped corners. Profile as indicated on drawings.

2. Frames: Minimum 16 gauge (0.053-inch -1.3-mm) thick steel sheet.

3. Manufacturers Basis of Design:

a. CECO Door Products – SU Series.

b. CECO Door Products - Thermal Break SQT Series.

D. Interior Frames: Fabricated from cold-rolled steel sheet that complies with ASTM A 1008/A 1008M.

1. Fabricate frames with mitered or coped corners. Profile as indicated on drawings.

2. Frames: Minimum 16 gauge (0.053-inch -1.3-mm) thick steel sheet.

3. Manufacturers Basis of Design:

a. CECO Door Products SU Series.

E. Fire rated frames: Fabricate frames in accordance with NFPA 80, listed and labeled by a qualified testing agency, for fire-protection ratings indicated.

F. Hardware Reinforcement: Fabricate according to ANSI/SDI A250.6 Table 4 with reinforcement plates from same material as frames.

2.05 FRAME ANCHORS

A. Jamb Anchors:

1. Masonry Type: Adjustable strap-and-stirrup or T-shaped anchors to suit frame size, formed from A60 metallic coated material, not less than 0.042 inch thick, with corrugated or perforated straps not less than 2 inches wide by 10 inches long; or wire anchors not less than 0.177 inch thick.

2. Stud Wall Type: Designed to engage stud and not less than 0.042 inch thick.

B. Floor Anchors: Floor anchors to be provided at each jamb, formed from A60 metallic coated material, not

less than 0.042 inches thick.

C. Mortar Guards: Formed from same material as frames, not less than 0.016 inches thick.

2.06 HOLLOW METAL PANELS

A. Provide hollow metal panels of same materials, construction, and finish as specified for adjoining hollow metal components.

2.07 LOUVERS

A. Metal Louvers: Door manufacturer's standard metal louvers unless otherwise indicated.

1. Blade Type: Vision proof inverted V or inverted Y.

2. Metal and Finish: Galvanized steel, 0.040 inch thick, factory primed for paint finish with baked enamel or powder coated finish. Match pre-finished door paint color where applicable.

B. Louvers for Fire Rated Doors: Metal louvers with fusible link and closing device, listed and labeled for use in doors with fire protection rating of 1-1/2 hours and less.

1. Manufacturers: Subject to compliance with requirements, provide door manufacturers standard louver to meet rating indicated.

2. Metal and Finish: Galvanized steel, 0.040 inch thick, factory primed for paint finish with baked enamel or powder coated finish. Match pre-finished door paint color where applicable.

2.08 LIGHT OPENINGS AND GLAZING

A. Stops and Moldings: Provide stops and moldings around glazed lites where indicated. Form corners of stops and moldings with butted or mitered hairline joints at fabricator’s shop. Fixed and removable stops to allow multiple glazed lites each to be removed independently. Coordinate frame rabbet widths between fixed and removable stops with the type of glazing and installation indicated.

B. Moldings for Glazed Lites in Doors and Loose Stops for Glazed Lites in Frames: Minimum 20 gauge thick, fabricated from same material as door face sheet in which they are installed.

C. Fixed Frame Moldings: Formed integral with hollow metal frames, a minimum of 5/8 inch (16 mm) high unless otherwise indicated. Provide fixed frame moldings and stops on outside of exterior and on secure side of interior doors and frames.

D. Preformed Metal Frames for Light Openings: Manufacturer's standard frame formed of 0.048-inch-thick, cold rolled steel sheet; with baked enamel or powder coated finish; and approved for use in doors of fire protection rating indicated. Match pre-finished door paint color where applicable.

2.09 ACCESSORIES

A. Mullions and Transom Bars: Join to adjacent members by welding or rigid mechanical anchors.

B. Grout Guards: Formed from same material as frames, not less than 0.016 inches thick.

2.10 FABRICATION

A. Fabricate hollow metal work to be rigid and free of defects, warp, or buckle. Accurately form metal to required sizes and profiles, with minimum radius for thickness of metal. Where practical, fit and assemble units in manufacturer's plant. When shipping limitations so dictate, frames for large openings are to be fabricated in sections for splicing or splining in the field by others.

B. Tolerances: Fabricate hollow metal work to tolerances indicated in ANSI/SDI A250.8.

C. Hollow Metal Doors:

1. Exterior Doors: Provide optional weep-hole openings in bottom of exterior doors to permit moisture to escape where specified.

2. Glazed Lites: Factory cut openings in doors with applied trim or kits to fit. Factory install glazing where indicated.

D. Hollow Metal Frames:

1. Shipping Limitations: Where frames are fabricated in sections due to shipping or handling limitations, provide alignment plates or angles at each joint, fabricated of same thickness metal as frames.

2. Welded Frames: Weld flush face joints continuously; grind, fill, dress, and make smooth, flush, and invisible.

a. Welded frames are to be provided with two steel spreaders temporarily attached to the bottom of both jambs to serve as a brace during shipping and handling. Spreader bars are for bracing only and are not to be used to size the frame opening.

3. Provide countersunk, flat- or oval-head exposed screws and bolts for exposed fasteners unless otherwise indicated for removable stops, provide security screws at exterior locations.

4. Mortar Guards: Provide guard boxes at back of hardware mortises in frames at all hinges and strike preps regardless of grouting requirements.

5. Floor Anchors: Weld anchors to bottom of jambs and mullions with at least four spot welds per anchor.

6. Jamb Anchors: Provide number and spacing of anchors as follows:

   a. Masonry Type: Locate anchors not more than 18 inches from top and bottom of frame. Space anchors not more than 32 inches o.c. and as follows:

      1). Two anchors per jamb up to 60 inches high.

      2). Three anchors per jamb from 60 to 90 inches high.

      3). Four anchors per jamb from 90 to 120 inches high.

      4). Four anchors per jamb plus 1 additional anchor per jamb for each 24 inches or fraction thereof above 120 inches high.

   b. Stud Wall Type: Locate anchors not more than 18 inches from top and bottom of frame. Space anchors not more than 32 inches o.c. and as follows:

      1). Three anchors per jamb up to 60 inches high.

      2). Four anchors per jamb from 60 to 90 inches high.

      3). Five anchors per jamb from 90 to 96 inches high.

      4). Five anchors per jamb plus 1 additional anchor per jamb for each 24 inches or fraction thereof above 96 inches high.

      5). Two anchors per head for frames above 42 inches wide and mounted in metal stud partitions.

7. Door Silencers: Except on weatherstripped or gasketed doors, drill stops to receive door silencers. Silencers to be supplied by frame manufacturer regardless if specified in Division 08 Section "Door Hardware".

E. Hardware Preparation: Factory prepare hollow metal work to receive template mortised hardware; include cutouts, reinforcement, mortising, drilling, and tapping according to the Door Hardware Schedule and templates furnished as specified in Division 08 Section "Door Hardware."

1. Locate hardware as indicated, or if not indicated, according to ANSI/SDI A250.8.

2. Reinforce doors and frames to receive non-template, mortised and surface mounted door hardware.

3. Comply with applicable requirements in ANSI/SDI A250.6 and ANSI/DHI A115 Series specifications for preparation of hollow metal work for hardware.

4. Coordinate locations of conduit and wiring boxes for electrical connections with Division 26 Sections.

2.11 STEEL FINISHES

A. Prime Finishes: Doors and frames to be cleaned, and chemically treated to insure maximum finish paint adhesion. Surfaces of the door and frame exposed to view to receive a factory applied coat of rust inhibiting shop primer.

1. Shop Primer: Manufacturer's standard, fast-curing, lead and chromate free primer complying with ANSI/SDI A250.10 acceptance criteria; recommended by primer manufacturer for substrate; and compatible with substrate and field-applied coatings.

PART 3 - EXECUTION

3.01 EXAMINATION

A. Examine substrates, areas, and conditions, with Installer present, for compliance with requirements for installation tolerances and other conditions affecting performance of the Work.

B. General Contractor to verify the accuracy of dimensions given to the steel door and frame manufacturer for existing openings or existing frames (strike height, hinge spacing, hinge back set, etc.).

C. Proceed with installation only after unsatisfactory conditions have been corrected.

3.02 PREPARATION

A. Remove welded in shipping spreaders installed at factory. Restore exposed finish by grinding, filling, and dressing, as required to make repaired area smooth, flush, and invisible on exposed faces.

B. Prior to installation, adjust and securely brace welded hollow metal frames for square, level, twist, and

plumb condition.

C. Tolerances shall comply with SDI-117 "Manufacturing Tolerances Standard Steel Doors and Frames."

D. Drill and tap doors and frames to receive non-template, mortised, and surface-mounted door hardware.

3.03 INSTALLATION

A. General: Install hollow metal work plumb, rigid, properly aligned, and securely fastened in place; comply with Drawings and manufacturer's written instructions.

B. Hollow Metal Frames: Install hollow metal frames of size and profile indicated. Comply with ANSI/SDI A250.11 and NFPA 80 at fire rated openings.

1. Set frames accurately in position, plumbed, leveled, aligned, and braced securely until permanent anchors are set. After wall construction is complete and frames properly set and secured, remove temporary braces, leaving surfaces smooth and undamaged. Shim as necessary to comply with installation tolerances.

2. Floor Anchors: Provide floor anchors for each jamb and mullion that extends to floor, and secure with post-installed expansion anchors.

3. Masonry Walls: Coordinate installation of frames to allow for solidly filling space between frames and masonry with mortar.

4. Grout Requirements: Do not grout head of frames unless reinforcing has been installed in head of frame. Do not grout vertical or horizontal closed mullion members.

C. Hollow Metal Doors: Fit hollow metal doors accurately in frames, within clearances specified below. Shim as necessary.

1. Non-Fire-Rated Standard Steel Doors:

a. Jambs and Head: 1/8 inch plus or minus 1/16 inch.

b. Between Edges of Pairs of Doors: 1/8 inch plus or minus 1/16 inch.

c. Between Bottom of Door and Top of Threshold: Maximum 3/8 inch.

d. Between Bottom of Door and Top of Finish Floor (No Threshold): Maximum 3/4 inch.

2. Fire-Rated Doors: Install doors with clearances according to NFPA 80.

D. Field Glazing: Comply with installation requirements in Division 08 Section "Glazing" and with hollow metal manufacturer's written instructions.

3.04 ADJUSTING AND CLEANING

A. Final Adjustments: Check and readjust operating hardware items immediately before final inspection. Leave work in complete and proper operating condition. Remove and replace defective work, including hollow metal work that is warped, bowed, or otherwise unacceptable.

B. Remove grout and other bonding material from hollow metal work immediately after installation.

C. Prime-Coat and Painted Finish Touchup: Immediately after erection, sand smooth rusted or damaged areas of prime coat, or painted finishes, and apply touchup of compatible air drying, rust-inhibitive primer, zinc rich primer (exterior and galvanized openings) or finish paint.

END OF SECTION

----------THIS PAGE LEFT INTENTIONALLY BLANK----------

PART 1 - GENERAL

1.01 RELATED DOCUMENTS

A. Drawings and general provisions of the Contract, including General and Supplementary Conditions and Division 1 Specification Sections, apply to this Section.

1.02 SUMMARY

A. Section Includes:

1. Solid core doors with wood veneer faces.
2. Factory finishing wood doors.
3. Acoustic wood doors
4. Factory fitting wood doors to frames and factory machining for hardware.
5. Louvers installed in flush wood doors.
6. Light frames and glazing installed in wood doors.

B. Related Sections:

1. Section 08 06 71 "Door Hardware Schedule".
2. Section 08 11 13 "Hollow Metal Doors and Frames".
3. Section 08 80 00 "Glazing".
4. Section 08 71 00 "Door Hardware".
5. Section 09 81 16 "Acoustic Blanket Insulation".

C. Standards and References: Comply with the version year adopted by the Authority Having Jurisdiction.

1. ANSI A117.1 - Accessible and Usable Buildings and Facilities.
2. ANSI A208.1 – Wood Particleboard.
3. ASTM E90-09 - Standard Test Method for Laboratory Measurement of Airborne Sound Transmission Loss of Building Partitions and Elements.
4. Intertek Testing Service (ITS Warnock Hersey) - Certification Listings for Fire Doors.
5. NFPA 80 - Standard for Fire Doors and Fire Windows; National Fire Protection Association.
6. NFPA 252 - Standard Methods of Fire Tests of Door Assemblies; National Fire Protection Association.
7. UL 10C - Positive Pressure Fire Tests of Door Assemblies; UL 1784 - Standard for Air Leakage Tests of Door Assemblies.
8. Window and Door Manufacturers Association - WDMA I.S.1-A Architectural Wood Flush Doors.

1.03 REGULATORY REQUIREMENTS

A. Installed Door and Frame Assembly: Conform to NFPA 80, UL 10C for fire rated class as scheduled.

B. Conform to ICC/ANSI A117.1.

1.04 SUBMITTALS

A. Product Data: For each type of door indicated. Include details of core and edge construction, louvers, trim for openings, and WDMA I.S.1-A classifications. Include factory finishing specifications.

B. Shop Drawings shall include:

1. Indicate location, size, and hand of each door.
2. Indicate dimensions and locations of mortises and holes for hardware.
3. Indicate dimensions and locations of cutouts.
4. Indicate requirements for veneer matching.
5. Indicate location and extent of hardware blocking.
6. Indicate construction details not covered in Product Data.
7. Indicate doors to be factory finished and finish requirements.
8. Indicate fire protection ratings for fire rated doors.

C. Samples for Initial Selection: For factory finished doors.

1. Factory finishes applied to actual door face materials, approximately 8 by 10 inches, for each material and finish. For each wood species and transparent finish, provide set of three samples showing typical range of color and grain to be expected in the finished work.
2. Corner sections of doors, 8 by 10 inches, with door faces and edges representing actual materials to be used.
    a. Provide samples for each species of veneer and core material.
    b. Finish veneer faced door samples with same materials proposed for factory finished doors.
3. Frames for light openings, 6 inches long, for each material, type, and finish required.

D. Warranty: Provide sample of manufacturer’s warranty.

1.05 QUALITY ASSURANCE

A. Source Limitations: Obtain flush wood doors through one source from a single manufacturer wherever possible.

B. Quality Standard: In addition to requirements specified, comply with WDMA I.S.1-A, latest edition, "Industry Standard for Architectural Wood Flush Doors’.

C. Fire Rated Wood Doors: Doors complying with NFPA 80 that are listed and labeled by a testing and inspecting agency acceptable to authorities having jurisdiction, for fire ratings indicated, based on testing at positive pressure according to NFPA 252 (neutral pressure at 40” above sill) or UL10C.
1. Oversize Fire Rated Door Assemblies: For units exceeding sizes of tested assemblies provide manufacturer’s construction label, indicating compliance to independent 3rd party certification agency’s procedure, except for size.
2. Temperature Rise Limit: Where required and at vertical exit enclosures (stairwell openings) and exit passageways, provide doors that have a maximum transmitted temperature end point of not more than 450 deg F (250 deg C) above ambient after 30 minutes of standard fire test exposure.
3. Smoke Control Door Assemblies: Comply with NFPA 105.
    a. Smoke "S" Label: Doors to bear “S” label, and include smoke and draft control gasketing applied to frame and on meeting stiles of pair doors.

D. Pre-Submittal Conference: Conduct conference in compliance with requirements in Division 01 Section "Project Meetings" with attendance by representatives of Supplier, Installer, and Contractor to review proper methods and procedures for receiving, handling, and installing flush wood doors.

1.06 DELIVERY, STORAGE, AND HANDLING

A. Comply with requirements of referenced standard and manufacturer's written instructions.

B. Package pre-finished doors individually in plastic bags and wrap bundles of doors in plastic sheeting.

C. Mark each door on top rail with opening number used on Shop Drawings.

1.07 PROJECT CONDITIONS

A. Environmental Limitations: Do not deliver or install doors until spaces are enclosed and weather tight, wet work in spaces is complete and dry, and HVAC system is operating and maintaining ambient temperature and humidity conditions at occupancy levels during the remainder of the construction period.

1.08 WARRANTY

A. Warranty: Manufacturer's standard form in which manufacturer agrees to repair or replace doors that fail in materials or workmanship within specified warranty period.
1. Failures include, but are not limited to, the following:
    a. Warping (bow, cup, or twist) more than 1/4 inch in a 42-by-84-inch section.
    b. Telegraphing of core construction in wood face veneers exceeding 0.01 inch in a 3-inch span.
2. Warranty includes installation and finishing that may be required due to repair or replacement of defective doors.
3. Warranty Period for Solid Core Interior Doors: Life of installation.

PART 2 - PRODUCTS

2.01 DOOR CONSTRUCTION - GENERAL

A. WDMA I.S.1-A Performance Grade: Extra Heavy Duty; Aesthetic Grade: Premium.

B. Fire Rated Doors: Provide construction and core as needed to provide fire ratings indicated.

1. Category A Edge Construction: Provide fire rated door edge construction with intumescent seals concealed by outer stile (Category A) at 45, 60, and 90 minute rated doors. Comply with specified requirements for exposed edges.

C. Acoustic Door: Minimum Sound Transmission Class (STC) 50 tested to ASTM E90.

2.02 CORE CONSTRUCTION

A. Particleboard Core Doors:

1. Particleboard: Wood fiber based materials complying with ANSI A208.1 Particleboard standard. Grade LD-2.
2. Adhesive: Fully bonded construction using Polyurethane (PUR) glue.
3. Blocking: As indicated under article “Blocking”.

B. Fire Resistant Composite Core Doors:

1. Core: Non-combustible mineral product complying with requirements of referenced quality standard and testing and inspecting agency for fire protection rating indicated.
2. Blocking: As indicated under article “Blocking”.
3. Edge Construction: At hinge stiles, provide laminated edge construction with improved screw holding capability and split resistance. Comply with specified requirements for exposed edges.

C. Acoustical Doors:

1. Acoustic core with wood veneer facing.
2. Door edging: .Provide hardwood stiles with stiles to match wood face and hardwood rails. Bottom rail may be omitted if required to meet acoustic performance requirements.
3. Glass: Type as tested to achieve STC and fire ratings factory installed.
4. Fabricate doors to ANSI/WDMA IS1A. Provide suitable thickness, design, and acoustic core to achieve specified STC and fire performance ratings.
5. Reinforce doors where surface-mounted hardware is required.
6. Drill and tap steel acoustic core for mortised, templated hardware.
7. Acoustic seals: Provide perimeter and bottom seals, manufacturer standard.

2.03 BLOCKING

A. Fire Rated Doors:

1. Provide blocking as indicated below:
   a. HB1: 5 inch in doors indicated to have closers and overhead stops.
   b. HB4: Two 5 inch x 14 inch lock blocking, in doors indicated to have exit devices.

2.04 VENEERED DOORS FOR TRANSPARENT FINISH

A. Manufacturers: Subject to compliance with requirements, provide products by one of the following:

1. Masonite: ASPIRO Series.

B. Interior Solid Core Doors:

1. Grade: Premium.
2. Faces: Veneer grades as noted below; veneer minimum 1/50-inch (0.5mm) thickness at moisture content of 12% or less.
   a. Quarter Cut Red Oak, AA grade faces.
3. Match between Veneer Leaves: Book match.
4. Assembly of Veneer Leaves on Door Faces:
   a. Running Match.
5. Pair and Set Match: Provide for doors hung in same opening or separated only by mullions.
6. Transom Match: Continuous match.
7. Vertical Edges: Matching same species as faces. Wood or composite material, one piece, laminated, or veneered. Minimum requirements per WDMA section P-1, Performance Standards for Architectural Wood Flush Doors.
8. Horizontal Edges: Solid wood or structural composite material meeting the minimum requirements per WDMA section P-1, Performance Standards for Architectural Wood Flush Doors
9. Construction: Five plies. Stiles and rails are bonded to core, then entire unit sanded before

applying face veneers.

10. At doors over 40% of the face cut-out for lights and or louvers, furnish engineered composite lumber core.

2.05 LOUVERS

A. Metal Louvers: Door manufacturer's standard metal louvers unless otherwise indicated.

1. Blade Type: Vision proof inverted V or inverted Y.

2. Metal and Finish: Galvanized steel, 0.040 inch thick, factory primed for paint finish with baked enamel or powder coated finish.

2.06 LIGHT FRAMES AND GLAZING

A. Wood Beads for Light Openings in Wood Doors up to and including 20-minute rating:

1. Wood Species: Same species as door faces.

2. Profile:

a. M1 Flush Bead.

b. At wood core doors with 20-minute fire protection ratings, provide wood beads and metal glazing clips approved for such use.

B. Metal Frames for Light Openings in Fire Rated Doors over 20-minute Rating: Manufacturer's standard frame formed of 0.048-inch-thick, cold rolled steel sheet; with baked enamel or powder coated finish; and approved for use in doors of fire protection rating indicated.

1. Manufacturers:

a. Air Louver.

b. All Metal Stamping.

c. Anemostat.

d. Pemko.

C. Glazing: Comply with installation requirements in Division 08 Section "Glazing" and with the flush wood door manufacturer's written instructions.

2.07 FABRICATION

A. Factory fit doors to suit frame opening sizes indicated.

1. Comply with requirements in NFPA 80 for fire rated doors.

2. Undercut: As required per manufacturer’s templates and sill condition.

B. Factory machine doors for hardware that is not surface applied. Comply with final hardware schedules, door frame Shop Drawings, DHI A115-W series standards, and hardware templates.

1. Coordinate with hardware mortises in metal frames to verify dimensions and alignment before factory machining.

2. Metal Astragals: Factory machine astragals and formed steel edges for hardware for pairs of fire rated doors.

C. Openings: Cut and trim openings through doors in factory.

1. Light Openings: Trim openings with moldings of material and profile indicated.

2. Glazing: Comply with applicable requirements in Division 08 Section "Glazing."

3. Louvers: Factory install louvers in prepared openings.

2.08 FACTORY FINISHING

A. General: Comply with referenced quality standard for factory finishing. Complete fabrication, including fitting doors for openings and machining for hardware that is not surface applied, before finishing.

1. Finish faces, all four edges, edges of cutouts, and mortises. Stains and fillers may be omitted on top and bottom edges, edges of cutouts, and mortises.

B. Transparent Finish: Provide a clear protective coating over the wood veneer allowing the natural color and grain of the selected wood species to provide the appearance specified. Stain is applied to the wood surface underneath the transparent finish to add color and design flexibility.

1. Finish: Meet or exceed WDMA I.S. 1A TR8 UV Cured Acrylated Polyester finish performance requirements.

2. Staining:

a. As selected by Architect from manufacturer's full range.

b. Custom stain to match architect’s sample.

3. Sheen: Satin.

PART 3 - EXECUTION

3.01 EXAMINATION

A. Examine doors and installed door frames before hanging doors.

1. Verify that frames comply with indicated requirements for type, size, location, and swing characteristics and have been installed with level heads and plumb jambs.

2. Reject doors with defects.

B. Proceed with installation only after unsatisfactory conditions have been corrected.

3.02 INSTALLATION

A. Hardware: For installation, see Division 8 Section "Door Hardware."

B. Installation Instructions: Install doors and frames to comply with manufacturer's written instructions and the referenced quality standard, and as indicated.

1. Install fire rated doors in corresponding fire rated frames according to NFPA 80.

C. Factory Fitted Doors: Align in frames for uniform clearance at each edge.

D. Factory Finished Doors: Restore finish before installation if fitting or machining is required at Project site.

E. Field modifications to doors shall not be permitted, except those specifically allowed by manufacturer or fire rating requirements.

3.03 ADJUSTING

A. Operation: Re-hang or replace doors that do not swing or operate freely.

B. Finished Doors: Replace doors that do not comply with requirements. Doors may be repaired or refinished if work complies with requirements and shows no evidence of repair or refinishing.

END OF SECTION

----------THIS PAGE LEFT INTENTIONALLY BLANK----------

PART 1 - GENERAL

1.01 RELATED DOCUMENTS

A. Drawings and general provisions of the Contract, including General and Supplementary Conditions and Division 01 Specification Sections, apply to this Section.

1.02 SECTION INCLUDES

A. Flush Steel Sectional Overhead Doors.

B. Electric Operators and Controls.

C. Operating Hardware, tracks, and support.

1.03 RELATED SECTIONS

A. Section 03 30 00 - Cast-In-Place Concrete: Prepared opening in concrete. Execution requirements for placement of anchors in concrete wall construction.

B. Section 04 22 00 - Unit Masonry Assemblies: Prepared opening in masonry. Execution requirements for placement of anchors in masonry wall construction.

C. Section 05 50 00 - Metal Fabrications: Steel frame and supports.

D. Section 06 10 00 – Rough Carpentry: Rough wood framing and blocking for door opening.

E. Section 07 90 00 - Joint Sealers: Perimeter sealant and backup materials.

F. Section 08 71 00 - Door Hardware: Cylinder locks.

G. Section 09 91 00 - Painting: Field painting.

H. Section 26 05 33 - Raceway and Boxes: Empty conduit from control station to door operator.

I. Section 26 05 83 - Wiring Connections: Electrical service to door operator.

1.04 REFERENCES

A. ANSI/DASMA 102 - American National Standard Specifications for Sectional Overhead Type Doors.

B. ASTM A 123 - Zinc hot-dipped galvanized coatings on iron and steel products.

C. ASTM A 216 - Specifications for sectional overhead type doors.

D. ASTM A 229 - Steel wire, oil-tempered for mechanical springs.

E. ASTM A 653 - Steel sheet, zinc-coated galvanized by the hot-dipped process, commercial quality.

1.05 DESIGN / PERFORMANCE REQUIREMENTS

A. Wind Loads: Design and size components to withstand loads caused by pressure and suction of wind acting normal to plane of wall as calculated in accordance with applicable code.

B. Wiring Connections: Requirements for electrical characteristics.

1. 115 volts, single phase, 60 Hz.
2. 230 volts, single phase, 60 Hz.
3. 230 volts, three phase, 60 Hz.
4. 460 volts, three phase, 60 Hz.

C. Single-Source Responsibility: Provide doors, tracks, motors, and accessories from one manufacturer for each type of door. Provide secondary components from source acceptable to manufacturer of primary components.

1.06 SUBMITTALS

A. Submit under provisions of Section 01 33 00.

B. Product Data: Manufacturer's data sheets on each product to be used, including:

1. Preparation instructions and recommendations.
2. Storage and handling requirements and recommendations.
3. Installation methods.

C. Shop Drawings: Indicate plans and elevations including opening dimensions and required tolerances, connection details, anchorage spacing, hardware locations, and installation details.

D. Manufacturer's Certificates: Certify products meet or exceed specified requirements.

E. Operation and Maintenance Data.

1.07 QUALITY ASSURANCE

A. Manufacturer Qualifications: Company specializing in manufacturing products specified in this section with minimum ten years documented experience.

B. Installer Qualifications: Authorized representative of the manufacturer with minimum five years documented experience.

C. Products Requiring Electrical Connection: Listed and classified by Underwriters Laboratories, Inc. acceptable to authority having jurisdiction as suitable for purpose specified.

1.08 DELIVERY, STORAGE, AND HANDLING

A. Store products in manufacturer's unopened labeled packaging until ready for installation.

B. Protect materials from exposure to moisture until ready for installation.

C. Store materials in a dry, ventilated weathertight location.

1.09 PROJECT CONDITIONS

A. Pre-Installation Conference: Convene a pre-installation conference just prior to commencement of field operations, to establish procedures to maintain optimum working conditions and to coordinate this work with related and adjacent work.

1.20 WARRANTY

A. Standard finish warranty against cracking, checking, or peeling for 10 years. Parts and Hardware for 1 year.

PART 2 - PRODUCTS

2.01 MANUFACTURERS

A. Design Basis: Model 522 by Clopay Corporation, which is located at: 8585 Duke Blvd.; Mason, OH 45040; Toll Free Tel: 800-233-8366; Tel: 513-770-4800; Fax: 888-434-3193; Email: request info (arch@clopay.com); Web: https://www.clopaydoor.com|https://www.clopaycommercial.com

B. Requests for substitutions will be considered in accordance with provisions of Section 01 25 00.

2.02 DEEP RIBBED STEEL DOORS, NON-INSULATED (107d)

A. Clopay Model 525. Standard duty deep ribbed steel doors, non-insulated.

1. Maximum Door Size (WxH): 20 ft 2 inches x 18 ft (6.15 x 5.5 m).
2. Steel Skin Thickness: 25 gauge 0.019 inch (0.48 mm).
3. Windows: None.
4. Door Drop Safety Device: Brackets to stop door from falling if lift cables fail.
4. Finish: Interior: 0.5 mil (0.013 mm) coating. Exterior: 1 mil (.025 mm) coating. Exterior color as follows:
    a. Color: White.
5. Lock Type: One inside slide locks.
6. Weatherstripping: Complete perimeter seals.
7. Track Size: 2 inches (51 mm) track for 2 inch (51 mm) diameter rollers.
    a. Vertical Tracks: 0.061 inch (1.55 mm) galvanized steel.
    b. Horizontal Tracks 0.075 inch (1.91 mm) galvanized steel.
8. Track configuration to maximize headroom available per plans.
9. Torsion Spring Counterbalance: Mechanism sized to weight of door, with high strength galvanized aircraft cable. 7 to 1 safety factor.
    a. High Cycle Spring: 50,000 cycles.

B. Door Construction:

1. Panel Sections: 2 inch (52 mm) thick.
2. Steel Skin: Roll formed commercial quality steel sheet, hot-dip galvanized per ASTM A924/A924M and ASTM A653/A653M, phosphatized and pre-painted with primer and baked-on polyester topcoat.
3. Panel Face Reinforcement: Two, 1/2 inch (13 mm) deep ribs on 8 inches (200 mm) centers, complemented by six, 1/8 inch (3 mm) beads on 2 inch (50 mm) centers.

4. Section Joints: Panel sections form a weathertight tongue and groove joint Bottom Panel Section: Reinforced with continuous 0.050 inch (1.27 mm) aluminum astragal retainer with U-shaped flexible PVC astragal.
5. Door End Stiles: Galvanized, primed, and polyester top-coated turn-down steel end stiles. Wrap face of panel sections a full 1-3/8 inches (35 mm).
    a. Engineered for easy hardware attachment through pre-punched holes.
    b. For Door Widths up to 14 ft 2 inches (4.32 m): 0.049 inch (1.25 mm) thick.
    c. For Door Widths greater than 14 ft 2 inches (4.32 m): 0.61 inch (1.55 mm) thick.
6. Connections: Fasten panel sections and stiles with manufacturer's Tog-L-Loc joining system.

2.02 FLUSH STEEL DOORS, INSULATED (102b, 102c)

A. Clopay Model 3722. Premium duty insulated 2-inches (51 mm) Flush steel doors, thermally-broken, polyurethane insulated.
1. Maximum Door Size (WxH): 32 ft, 2 inches x 24 ft (9.8 x 7.3 m).
2. Overall Panel Thickness: 2 inches (51 mm).
3. Steel Skin Thickness: Exterior: 20 ga .034 inch (0.86 mm). Interior: 27 gauge 0.016 inch (0.40 mm).
4. Steel Reinforcement: Galvanized and primed. Located under each hinge location. Pre-punched for hinge attachment.
5. End Stiles: Galvanized steel. Easy hardware attachment through pre-punched holes. Single End Hinge Style: 18 gauge, 0.045 inch (1.14 mm) thick. Double End Hinge Style: 16 gauge 0.056 inch (1.42 mm).
6. Astragal: U-shaped flexible PVC in full-length retainer of 0.055 inch (1.4 mm) rigid PVC.
7. Thermal Resistance (R-value) calculated in accordance with DASMA TDS-163: 18.4 deg F hr sq ft/Btu (2.7 (K sq m)/W).
8. Insulation: CFC-free and HCFC-free polyurethane, fully encapsulated.
9. U-Factor: 0.16.
10. Air Infiltration: 0.22 cfm at 25 mph.
11. Finish: Interior stucco embossed texture with shallow U ribbed pattern. Color: White. Exterior: Stucco embossed texture with flush exterior panel. Color as follows
    a. Exterior Color Blast.
        1) SW Color: Match Existing
12. Windows: two full section, match existing.
13. Windows: Full vision aluminum section, pre-painted to match door finish.
    a. Glazing: 1/2 inch (13 mm) tempered insulated glass.
14. Lock Type: Two inside slide locks.
15. Door Drop Safety Device: Brackets to stop door from falling if lift cables fail.
16. Weatherstripping: Complete perimeter seals.
17. Track Size: 3 inches (76 mm) track for 3 inch (76 mm) diameter rollers.
    a. Vertical and Horizontal Tracks: 0.096 inch (2.43 mm) galvanized steel.
18. Track configuration to maximize headroom available per plans.
19. Torsion Spring Counterbalance: Mechanism sized to weight of door, with high strength galvanized aircraft cable. 7 to 1 safety factor.
    a. High Cycle Spring: 100,000 cycles
20. Break-Away Bottom Section: Integral part of door. Fiberglass with flexible neoprene rubber side edges. Exterior to match door face
    a. Single Breakaway Bottom Section: For doors up to 20 ft (6 m) wide

2.03 ELECTRIC DOOR OPERATORS (102b, 102c)

A. General: Provide electric door operator provided by door manufacturer for door with operational life specified complete with electric motor and factory pre-wired motor controls, starter, gear-reduction unit, clutch, remote-control stations, control devices, integral gearing for locking door, and accessories required for proper operation. Comply with NFPA 70.
1. Solenoid-operated brake.

B. Disconnect Device: Provide hand-operated disconnect or mechanism for emergency manual operation while disconnecting motor, without affecting timing of limit switch. Mount disconnect and operator so they are accessible from floor level. Include interlock device to automatically prevent motor from operating when emergency operator is engaged.

C. Design operator so motor may be removed without disturbing limit switch adjustment and without affecting emergency auxiliary operator.

D. Provide control equipment complying with NEMA ICS1, NEMA ICS 2, and NEMA ICS 6, with NFPA 70 Class 2 control circuit, maximum 24-V, AC or DC.

E. Electric Motors: Provide high-starting torque, reversible, continuous-duty, Class A insulated, electric motor, complying with NEMA MG 1, with overload protection, sized to start, accelerate, and operate door in either direction, from any position, at not less than 2/3 fps (0.2 m/s) and not more than 1 fps (.03m/s), without exceeding nameplate ratings or considering service factor.

1. Type: Solid State.
2. Type: Jackshaft.
3. HP:
    a. 3/4hp (559 W).
6. Power Characteristics:
    a. 115 V.
    b. 1 phase.
7. Service Factor:
    a. NEMA MG 1.
8. Coordinate wiring requirements and electrical characteristics of motors with building electrical system.

F. Remote Control Station: Provide momentary contact, 3-button control station with push - button controls labeled "Open", "Close" and "Stop".

H. Provide interior units, fully guarded, surface mounted, heavy-duty type, with general-purpose NEMA ICS 6 enclosure in one of the following types:

1. Enclosure Type: Type 1.

I. Obstruction Detection Device: Provide each motorized door with indicated external automatic safety sensor able to protect full width of door opening. Activation of sensor immediately stops and reverses downward door travel.

1. Sensor Edge: Provide each motorized door with an automatic safety sensing edge, located within astragal or weather stripping mounted to bottom bar. Contact with sensor immediately stops and reverses downward door travel. Connect to control circuit using manufacturer's standard take-up reel or self-coiling cord. Sensing edge shall be operated by:
    a. Electric Fail safe.
2. Photo-electric control: Provide each motorized door with a photo-electric device that will stop and reverse the downward door travel if the light beam is broken or blocked. Device shall be:
    a. NEMA Type 1.

J. Limit Switches: Provide adjustable switches, interlocked with motor controls and set to automatically stop door at fully opened and fully closed positions.

K. Radio Controls: Provide 3 button radio transmitter to provide remote open, close, stop functionality.

1. Provide external antenna and coaxial wiring to receiver to enhance radio control reception.

PART 3 - EXECUTION

3.01 EXAMINATION

A. Do not begin installation until openings have been properly prepared.

B. Verify wall openings are ready to receive work and opening dimensions and tolerances are within specified limits.

C. Verify electric power is available and of correct characteristics.

D. If preparation is the responsibility of another installer, notify Architect of unsatisfactory preparation before proceeding.

3.02 PREPARATION

A. Clean surfaces thoroughly prior to installation.

B. Prepare surfaces using the methods recommended by the manufacturer for achieving the best result for the substrate under the project conditions.

3.03 INSTALLATION

A. Install overhead doors and track in accordance with approved shop drawings and the manufacturer's printed instructions.

B. Coordinate installation with adjacent work to ensure proper clearances and allow for maintenance.

C. Anchor assembly to wall construction and building framing without distortion or stress.

D. Securely brace door tracks suspended from structure. Secure tracks to structural members only.

E. Fit and align door assembly including hardware.

F. Coordinate installation of electrical service. Complete power and control wiring from disconnect to unit components.

3.04 CLEANING AND ADJUSTING

A. Adjust door assembly to smooth operation and in full contact with weatherstripping.

B. Clean doors, frames and glass.

C. Remove temporary labels and visible markings.

3.05 PROTECTION

A. Do not permit construction traffic through overhead door openings after adjustment and cleaning.

B. Protect installed products until completion of project.

C. Touch-up, damaged coatings and finishes and repair minor damage before Substantial Completion.

END OF SECTION

----------THIS PAGE LEFT INTENTIONALLY BLANK----------

PART 1 - GENERAL

1.01 RELATED DOCUMENTS

A. Drawings and general provisions of the Contract, including General and Supplementary Conditions and Division 01 Specification Sections, apply to this Section.

1.02 SUMMARY

A. Section includes:

1. Exterior and interior storefront framing.
2. Storefront framing for punched openings.
3. Exterior and interior manual-swing entrance doors and door frame units.

1.03 PERFORMANCE REQUIREMENTS

A. General Performance: Aluminum-framed systems shall withstand the effects of the following performance requirements without exceeding performance criteria or failure due to defective manufacture, fabrication, installation, or other defects in construction:

1. Movements of supporting structure indicated on Drawings including, but not limited to, story drift and deflection from uniformly distributed and concentrated live loads.
2. Dimensional tolerances of building frame and other adjacent construction.
3. Failure includes the following:
    a. Deflection exceeding specified limits.
    b. Thermal stresses transferring to building structure.
    c. Framing members transferring stresses, including those caused by thermal and structural movements to glazing.
    d. Noise or vibration created by wind and by thermal and structural movements.
    e. Loosening or weakening of fasteners, attachments, and other components.
    f. Failure of operating units.

B. Delegated Design: Design aluminum-framed systems, including comprehensive engineering analysis by a qualified professional engineer, using performance requirements and design criteria indicated.

1. Engineer shall confirm anticipated deflection of building structure prior to designing storefront system and include head receptors as required to conceal any exposed head joints greater than 1/2 inch.

C. Wind Loads: Provide storefront systems, including anchorage, capable of withstanding wind-load design pressures calculated according to requirements of authorities having jurisdiction or the American Society of Civil Engineers ASCE 7, "Minimum Design Loads for Buildings and Other Structures, 6.4.2 Analytical Procedure", whichever is more stringent.

D. Deflection of Framing Members:

1. Deflection Normal to Wall Plane: Limited to edge of glass in a direction perpendicular to glass plane shall not exceed L/175 of the glass edge length for each individual glazing lite or an amount that restricts edge deflection of individual glazing lites to 3/4 inch, whichever is less.
2. Deflection Parallel to Glazing Plane: Limited to L/360 of clear span or 1/8 inch, whichever is smaller.

E. Structural-Test Performance: Provide aluminum-framed systems tested according to ASTM E330 as follows:

1. When tested at 150 percent of positive and negative wind-load design pressures, systems, including anchorage, do not evidence material failures, structural distress, and permanent deformation of main framing members exceeding 0.2 percent of span.
2. Test Durations: 10 seconds.

F. Air Infiltration: Provide aluminum-framed systems with maximum air leakage through fixed glazing and framing areas of 0.06 cfm/sq. ft. of fixed wall area when tested according to ASTM E283 at a minimum static-air-pressure difference of 6.24 lbf/ft^2.

G. Water Penetration under Static Pressure: Provide aluminum-framed systems that do not evidence water penetration through fixed glazing and framing areas when tested according to ASTM E331 at a minimum

static-air-pressure difference of 20 percent of positive wind-load design pressure, but not less than 8 lbf/ft^2.

1.04 SUBMITTALS

A. Product Data: For each type of product indicated.

B. Shop Drawings: For aluminum-framed systems. Include plans, elevations, sections, details, and attachments to other work.

1. Include details of provisions for system expansion and contraction and for drainage of moisture in the system to the exterior.

C. Samples: For each type of exposed finish required.

D. Other Action Submittals:

1. Entrance Door Hardware Schedule: Prepared by or under the supervision of supplier, detailing fabrication and assembly of entrance door hardware, as well as procedures and diagrams.

E. Delegated-Design Submittal: For aluminum-framed systems indicated to comply with performance requirements and design criteria, including analysis data signed and sealed by the qualified professional engineer responsible for their preparation.

1. Detail fabrication and assembly of systems.

2. Include design calculation.

F. Product test reports.

G. Warranties: Sample of special warranties.

1.05 QUALITY ASSURANCE

A. Installer Qualifications: Manufacturer's authorized representative who is trained and approved for installation of units required for this Project.

B. Testing Agency Qualifications: Qualified according to ASTM E699 for testing indicated.

C. Engineering Responsibility: Prepare data for aluminum-framed systems, including Shop Drawings, based on testing and engineering analysis of manufacturer's standard units in systems similar to those indicated for this Project.

D. Product Options: Information on Drawings and in Specifications establishes requirements for systems' aesthetic effects and performance characteristics. Aesthetic effects are indicated by dimensions, arrangements, alignment, and profiles of components and assemblies as they relate to sightlines, to one another, and to adjoining construction. Performance characteristics are indicated by criteria subject to verification by one or more methods including preconstruction testing, field testing, and in-service performance.

E. Accessible Entrances: Comply with applicable provisions in the U.S. Architectural & Transportation Barriers Compliance Board's ADA-ABA Accessibility Guidelines and ICC/ANSI A117.1.

F. Source Limitations for Aluminum-Framed Systems: Obtain from single source from single manufacturer.

G. Mockups: Build mockups to verify selections made under sample submittals and to demonstrate aesthetic effects and technical conditions that set quality standards for fabrication and installation.

1. Build mockup of typical wall area shown on Drawings.

2. Field testing shall be performed on mockups according to requirements in “Field Quality Control” article.

3. Approval of mockups does not constitute approval of deviations from the Contract Documents contained in mockups unless Architect specifically approves such deviations in writing.

4. Approved mockups may become part of the completed Work if undisturbed at time of Substantial Completion.

H. Coordinate locations of mockups with Architect.

I. Preinstallation Conference: Conduct conference at Project site.

1.06 WARRANTY

A. Special Warranty: Manufacturer's standard form in which manufacturer agrees to repair or replace components of aluminum-framed systems that do not comply with requirements or that fail in materials or workmanship within specified warranty period.

1. Warranty Period: Two years from date of Substantial Completion.

B. Special Finish Warranty: Manufacturer's standard form in which manufacturer agrees to repair or replace components on which finishes do not comply with requirements or that fail in materials or workmanship within specified warranty period. Warranty does not include normal weathering.

1. Warranty Period: 20 years from date of Substantial Completion.

PART 2 - PRODUCTS

2.01 MANUFACTURERS

A. Manufacturers: Subject to compliance with requirements, available manufacturers offering products that may be incorporated into the Work include, but are not limited to, the following:

B. Basis-of-Design Product: Subject to compliance with requirements, provide Kawneer Trifab® VG 451/451T Storefront System or comparable product by one of the following:

1. EFCO Corporation.
2. Kawneer North America; an Alcoa company.
3. United States Aluminum
4. Vistawall Architectural Products; The Vistawall Group; a Bluescope Steel company.
5. YKK AP America Inc.
6. Tubelite, www.tubeliteinc.com
7. Manko Window Systems

C. The Drawings indicate size, profiles, and dimensional requirements of the aluminum storefront system and are based on the specific manufacturer and model indicated. Aluminum storefront systems having equal characteristics by other manufacturers may be considered provided that deviations in dimensions and profiles are minor and do not change the concept or intended performance as judged by the Architect.

2.02 MATERIALS

A. Aluminum: Alloy and temper recommended by manufacturer for type of use and finish indicated.

1. Sheet and Plate: ASTM B209.
2. Extruded Bars, Rods, Profiles, and Tubes: ASTM B221.
3. Extruded Structural Pipe and Tubes: ASTM B429.
4. Structural Profiles: ASTM B308/B308M.
5. Welding Rods and Bare Electrodes: AWS A5.10/A5.IOM.

B. Steel Reinforcement: Manufacturer's standard zinc-rich, corrosion-resistant primer, complying with SSPC-PS Guide No. 12.00; applied immediately after surface preparation and pretreatment. Select surface preparation methods according to recommendations in SSPC-SP COM and prepare surfaces according to applicable SSPC standard.

1. Structural Shapes, Plates, and Bars: ASTM A36/A36M
2. Cold-Rolled Sheet and Strip: ASTM A1008/A10O8M
3. Hot-Rolled Sheet and Strip: ASTM A1011/A1011M

2.03 FRAMING SYSTEMS

A. Framing Systems Basis of Design:

1. Exterior: Kawneer Trifab@ VersaGlaze@ 451T for insulated glass.
   a. Glazing Plane: Center Glazed.
2. Interior: Kawneer Trifab@ VersaGlaze@ 451 for monolithic glass types.
   a. Glazing Plane: Center glazed.

B. Framing Members: Manufacturer's standard extruded-aluminum framing members of thickness required and reinforced as required to support imposed loads.

1. System Dimensions: 2" x 4 1/2".
2. Construction: Thermally broken for exterior; Non-thermal for interior
3. Glazing System: Retained mechanically with gaskets on four sides.

C. Brackets and Reinforcements: Manufacturer's standard high-strength aluminum with nonstaining, nonferrous shims for aligning system components.

D. Fasteners and Accessories: Manufacturer's standard corrosion-resistant, nonstaining, nonbleeding fasteners and accessories compatible with adjacent materials.

1. Use self-locking devices where fasteners are subject to loosening or turning out from thermal and structural movements, wind loads, or vibration.

2. Reinforce members as required to receive fastener threads.

E. Concrete and Masonry Inserts: Hot-dip galvanized cast-iron, malleable-iron, or steel inserts, complying with ASTM A123/A123M or ASTM A153/A153M.

F. Concealed Flashing: Manufacturer's standard corrosion-resistant, nonstaining, nonbleeding flashing compatible with adjacent materials.

G. Framing System Gaskets and Sealants: Manufacturer's standard, recommended by manufacturer for joint type.

2.04 GLAZING SYSTEMS

A. Glazing: As specified in Division 08 Section "Glazing"

B. Glazing Gaskets: Manufacturer's standard compression types; replaceable, molded or extruded, of profile and hardness required to maintain watertight seal.

C. Spacers and Setting Blocks: Manufacturer's standard elastomeric type.

2.05 ENTRANCE DOOR SYSTEMS

A. Entrance Doors: Manufacturer's standard glazed entrance doors for manual-swing operation.

1. Door Construction: 2 1/4 inch overall thickness, with minimum 0.125-inch thick, extruded-aluminum tubular rail and stile members. Mechanically fasten corners with reinforcing brackets that are deeply penetrated and fillet welded or that incorporate concealed tie rods.

a. Thermal Construction: High-performance plastic connectors separate aluminum members exposed to the exterior from members exposed to the interior.

2. Door Design: Wide stile; 6 inch nominal width with 10 inch high bottom rail and 8 inch top rail.

a. Top rail width to conceal all components of closer, mounting plate, and mounting hardware. Contractor shall coordinate with hardware.

b. Refer to drawings for special top or bottom rail units.

c. Accessible Doors: Smooth surfaced for width of door in area within 10 inches above floor or ground plane.

3. Glazing Stops and Gaskets: Square, snap-on, extruded-aluminum stops and preformed gaskets.

a. Provide nonremovable glazing stops on outside of door.

B. Entrance Door Hardware: As noted in Division 08 Section "Door Hardware".

2.06 ENTRANCE DOOR HARDWARE

A. General: Provide entrance door hardware and entrance door hardware sets indicated in door and frame schedule and entrance door hardware sets indicated in "Entrance Door Hardware Sets" Article for each entrance door to comply with requirements in this Section.

1. Entrance Door Hardware Sets: Provide quantity, item, size, and finish or color indicated in Section 08 Door Hardware Schedule.

2. Opening-Force Requirements:

a. Egress Doors: Not more than 15 lbf to release the latch, and not more than 30 lbf to set the door in motion, and not more than 15 lbf to open the door to its minimum required width.

b. Accessible Interior Doors: Not more than 5 lbf to fully open door.

B. Opening-Force Requirements:

1. Latches and Exit Devices: Not more than 15 lbf required to release latch.

C. Weather Stripping: Manufacturer's standard replaceable components.

D. Weather Sweeps: Manufacturer's standard exterior-door bottom sweep with concealed fasteners on mounting strip.

E. Thresholds: BHMA A156.21, raised thresholds beveled with a slope of not more than 1:2, with maximum height of 1/2 inch.

2.07 ACCESSORY MATERIALS

A. Bituminous Paint: Cold-applied, asphalt-mastic paint complying with SSPC-Paint 12 requirements except containing no asbestos; formulated for 30-mil thickness per coat.

B. Joint Sealants: For installation of aluminum framed systems as specified in Division 07 Section “Joint Sealants”.

2.08 FABRICATION

A. Form or extrude aluminum shapes before finishing.

B. Weld in concealed locations to greatest extent possible to minimize distortion or discoloration of finish. Remove weld spatter and welding oxides from exposed surfaces by descaling or grinding.

C. Framing Members, General: Fabricate components that, when assembled, have the following characteristics:

1. Profiles that are sharp, straight, and free of defects or deformations.
2. Accurately fined joints with ends coped or mitered.
3. Means to drain water passing joints, condensation within framing members, and moisture migrating within the system to exterior.
4. Physical and thermal isolation of glazing from framing members.
5. Accommodations for thermal and mechanical movements of glazing and framing to maintain required glazing edge clearances.
6. Provisions for field replacement of glazing from interior for vision glass and exterior for spandrel glazing or metal panels.
7. Fasteners, anchors, and connection devices that are concealed from view to greatest extent possible.

D. Mechanically Glazed Framing Members: Fabricate for flush glazing without projecting stops.

E. Entrance Door Frames: Reinforce as required to support loads imposed by door operation and for installing entrance door hardware.

F. Entrance Doors: Reinforce doors as required for installing entrance door hardware.

G. Entrance Door Hardware Installation: Factory install entrance door hardware to the greatest extent possible. Cut, drill, and tap for factory-installed entrance door hardware before applying finishes.

H. After fabrication, clearly mark components to identify their locations in Project according to Shop Drawings.

2.09 ALUMINUM FINISHES

A. Finish designations prefixed by AA comply with the system established by the Aluminum Association for designating aluminum finishes.

B. Architectural Finish: Anodic Coating, complying with AAMA 611, Class I Clear.

PART 3 - EXECUTION

3.01 INSTALLATION

A. General:

1. Comply with manufacturer's written instructions.
2. Do not install damaged components.
3. Fit joints to produce hairline joints free of burrs and distortion.
4. Rigidly secure non-movement joints.
5. Install anchors with separators and isolators to prevent metal corrosion and electrolytic deterioration.
6. Seal joints watertight unless otherwise indicated.

B. Metal Protection:

1. Where aluminum will contact dissimilar metals, protect against galvanic action by painting contact surfaces with primer or applying sealant or tape, or by installing nonconductive spacers as recommended by manufacturer for this purpose.
2. Where aluminum will contact concrete or masonry, protect against corrosion by painting contact surfaces with bituminous paint.

C. Install components to drain water passing joints, condensation occurring within framing members, and moisture migrating within the system to exterior.

D. Set continuous sill members and flashing in full sealant bed as specified in Division 07 Section "Joint Sealants" to produce weathertight installation.

E. Install components plumb and true in alignment with established lines and grades, and without warp or rack.

F. Install glazing as specified in Division 08 Section "Glazing"

G. Entrance Doors: Install doors to produce smooth operation and tight fit at contact points.

1. Exterior Doors: Install to produce weathertight enclosure and tight fit at weather stripping.

2. Field-installed Entrance Door Hardware: Install surface-mounted entrance door hardware according to entrance door hardware manufacturers' written instructions using concealed fasteners to greatest extent possible.

3.02 FIELD QUALITY CONTROL

A. Testing Agency: Engage a qualified independent testing and inspecting agency to perform field tests and inspections.

B. Testing Services: Testing and inspecting of representative areas to determine compliance of installed systems with specified requirements shall take place as follows. Do not proceed with installation of the next area until test results for previously completed areas show compliance with requirements.

1. Air Infiltration: Areas shall be tested for air leakage of 1.5 times the rate specified for laboratory testing in "Performance Requirements" Article, but not more than 0.50 cfm/sq. ft., of fixed wall area when tested according to ASTM E783 at a minimum static-air-pressure differential of 6.24 lbf/sq. ft..

a. Test Area: One full bay or as directed by the Architect.

b. Perform a minimum of three tests in areas as directed by Architect.

2. Water Penetration: Areas shall be tested according to ASTM E 1105 at a minimum uniform static-air-pressure differential of 0.67 times the static-air-pressure differential specified for laboratory testing in "Performance Requirements" Article, but not less than 6.24 lbf/sq. ft., and shall not evidence water penetration. Test shall encompass window perimeter.

a. Test Area: One full bay or as directed by the Architect.

b. Perform a minimum of three tests in areas as directed by Architect.

C. Repair or remove work if test results and inspections indicate that it does not comply with specified requirements.

D. Additional testing and inspecting, at Contractor's expense, will be performed to determine compliance of replaced or additional work with specified requirements.

E. Aluminum-framed assemblies will be considered defective if they do not pass tests and inspections.

F. Prepare test and inspection reports.

END OF SECTION

PART 1 - GENERAL

1.01 RELATED DOCUMENTS

A. Drawings and general provisions of the Contract, including General and Supplementary Conditions and Division 1 Specification Sections, apply to this Section.

1.02 SUMMARY

A. This Section includes commercial door hardware for the following:
   1. Swinging doors.
   2. Other doors to the extent indicated.

B. Door hardware includes, but is not necessarily limited to, the following:
   1. Mechanical door hardware.
   2. Electromechanical door hardware.
   3. Automatic operators.
   4. Cylinders specified for doors in other sections.

C. Related Sections:
   1. Division 08 Section “Door Hardware Schedule”.
   2. Division 08 Section “Hollow Metal Doors and Frames”.
   3. Division 08 Section “Flush Wood Doors”.
   4. Division 08 Section “Automatic Door Operators”.

D. Codes and References: Comply with the version year adopted by the Authority Having Jurisdiction.
   1. ANSI A117.1 - Accessible and Usable Buildings and Facilities.
   2. ICC/IBC - International Building Code.
   3. NFPA 70 - National Electrical Code.
   4. NFPA 80 - Fire Doors and Windows.
   5. NFPA 101 - Life Safety Code.
   6. NFPA 105 - Installation of Smoke Door Assemblies.
   7. UL/ULC and CSA C22.2 – Standards for Automatic Door Operators Used on Fire and Smoke Barrier Doors and Systems of Doors.
   8. State Building Codes, Local Amendments.

E. Standards: All hardware specified herein shall comply with the following industry standards:
   1. ANSI/BHMA Certified Product Standards - A156 Series
   2. UL10C – Positive Pressure Fire Tests of Door Assemblies

1.03 SUBMITTALS

A. Product Data: Manufacturer's product data sheets including installation details, material descriptions, dimensions of individual components and profiles, operational descriptions and finishes.

B. Door Hardware Schedule: Prepared by or under the supervision of supplier, detailing fabrication and assembly of door hardware, as well as procedures and diagrams. Coordinate the final Door Hardware Schedule with doors, frames, and related work to ensure proper size, thickness, hand, function, and finish of door hardware.
   1. Format: Comply with scheduling sequence and vertical format in DHI's "Sequence and Format for the Hardware Schedule."
   2. Organization: Organize the Door Hardware Schedule into door hardware sets indicating complete designations of every item required for each door or opening. Organize door hardware sets in same order as in the Door Hardware Sets at the end of Part 3. Submittals that do not follow the same format and order as the Door Hardware Sets will be rejected and subject to resubmission.
   3. Content: Include the following information:
      a. Type, style, function, size, label, hand, and finish of each door hardware item.
      b. Manufacturer of each item.

c. Fastenings and other pertinent information.

d. Location of door hardware set, cross-referenced to Drawings, both on floor plans and in door and frame schedule.

e. Explanation of abbreviations, symbols, and codes contained in schedule.

f. Mounting locations for door hardware.

g. Door and frame sizes and materials.

h. Warranty information for each product.

4. Submittal Sequence: Submit the final Door Hardware Schedule at earliest possible date, particularly where approval of the Door Hardware Schedule must precede fabrication of other work that is critical in the Project construction schedule. Include Product Data, Samples, Shop Drawings of other work affected by door hardware, and other information essential to the coordinated review of the Door Hardware Schedule.

C. Shop Drawings: Details of electrified access control hardware indicating the following:

1. Wiring Diagrams: Upon receipt of approved schedules, submit detailed system wiring diagrams for power, signaling, monitoring, communication, and control of the access control system electrified hardware. Differentiate between manufacturer-installed and field-installed wiring. Include the following:

a. Elevation diagram of each unique access controlled opening showing location and interconnection of major system components with respect to their placement in the respective door openings.

b. Complete (risers, point-to-point) access control system block wiring diagrams.

c. Wiring instructions for each electronic component scheduled herein.

2. Electrical Coordination: Coordinate with related sections the voltages and wiring details required at electrically controlled and operated hardware openings.

D. Keying Schedule: After a keying meeting with the owner has taken place prepare a separate keying schedule detailing final instructions. Submit the keying schedule in electronic format. Include keying system explanation, door numbers, key set symbols, hardware set numbers and special instructions. Owner must approve submitted keying schedule prior to the ordering of permanent cylinders/cores.

E. Operating and Maintenance Manuals: Provide manufacturers operating and maintenance manuals for each item comprising the complete door hardware installation in quantity as required in Division 01, Closeout Submittals.

1.04 QUALITY ASSURANCE

A. Manufacturers Qualifications: Engage qualified manufacturers with a minimum 5 years of documented experience in producing hardware and equipment similar to that indicated for this Project and that have a proven record of successful in-service performance.

B. Installer Qualifications: A minimum 3 years documented experience installing both standard and electrified door hardware similar in material, design, and extent to that indicated for this Project and whose work has resulted in construction with a record of successful in-service performance.

C. Door Hardware Supplier Qualifications: Experienced commercial door hardware distributors with a minimum 5 years documented experience supplying both mechanical and electromechanical hardware installations comparable in material, design, and extent to that indicated for this Project. Supplier recognized as a factory direct distributor by the manufacturers of the primary materials with a warehousing facility in Project's vicinity. Supplier to have on staff a certified Architectural Hardware Consultant (AHC) available during the course of the Work to consult with Contractor, Architect, and Owner concerning both standard and electromechanical door hardware and keying.

D. Source Limitations: Obtain each type and variety of door hardware specified in this section from a single source unless otherwise indicated.

1. Electrified modifications or enhancements made to a source manufacturer's product line by a secondary or third party source will not be accepted.

2. Provide electromechanical door hardware from the same manufacturer as mechanical door hardware, unless otherwise indicated.

E. Each unit to bear third party permanent label demonstrating compliance with the referenced standards.

F. Keying Conference: Conduct conference to comply with requirements in Division 01 Section "Project Meetings." Keying conference to incorporate the following criteria into the final keying schedule document:

1. Function of building, purpose of each area and degree of security required.

2. Plans for existing and future key system expansion.

3. Requirements for key control storage and software.

4. Installation of permanent keys, cylinder cores and software.

5. Address and requirements for delivery of keys.

G. Pre-Submittal Conference: Conduct coordination conference in compliance with requirements in Division 01 Section "Project Meetings" with attendance by representatives of Supplier(s), Installer(s), and Contractor(s) to review proper methods and the procedures for receiving, handling, and installing door hardware.

1. Prior to installation of door hardware, conduct a project specific training meeting to instruct the installing contractors' personnel on the proper installation and adjustment of their respective products. Product training to be attended by installers of door hardware (including electromechanical hardware) for aluminum, hollow metal and wood doors. Training will include the use of installation manuals, hardware schedules, templates and physical product samples as required.

2. Inspect and discuss electrical roughing-in, power supply connections, and other preparatory work performed by other trades.

3. Review sequence of operation narratives for each unique access controlled opening.

4. Review and finalize construction schedule and verify availability of materials.

5. Review the required inspecting, testing, commissioning, and demonstration procedures

H. At completion of installation, provide written documentation that components were applied to manufacturer's instructions and recommendations and according to approved schedule.

1.05 DELIVERY, STORAGE, AND HANDLING

A. Inventory door hardware on receipt and provide secure lock-up and shelving for door hardware delivered to Project site. Do not store electronic access control hardware, software or accessories at Project site without prior authorization.

B. Tag each item or package separately with identification related to the final Door Hardware Schedule, and include basic installation instructions with each item or package.

C. Deliver, as applicable, permanent keys, cylinders, cores, access control credentials, software and related accessories directly to Owner via registered mail or overnight package service. Instructions for delivery to the Owner shall be established at the "Keying Conference".

1.06 COORDINATION

A. Templates: Obtain and distribute to the parties involved templates for doors, frames, and other work specified to be factory prepared for installing standard and electrified hardware. Check Shop Drawings of other work to confirm that adequate provisions are made for locating and installing hardware to comply with indicated requirements.

B. Door Hardware and Electrical Connections: Coordinate the layout and installation of scheduled electrified door hardware and related access control equipment with required connections to source power junction boxes, low voltage power supplies, detection and monitoring hardware, and fire and detection alarm systems.

C. Door and Frame Preparation: Doors and corresponding frames are to be prepared, reinforced and pre-wired (if applicable) to receive the installation of the specified electrified, monitoring, signaling and access control system hardware without additional in-field modifications.

1.07 WARRANTY

A. General Warranty: Reference Division 01, General Requirements. Special warranties specified in this Article shall not deprive Owner of other rights Owner may have under other provisions of the Contract Documents and shall be in addition to, and run concurrent with, other warranties made by Contractor under requirements of the Contract Documents.

B. Warranty Period: Written warranty, executed by manufacturer(s), agreeing to repair or replace components of standard and electrified door hardware that fails in materials or workmanship within specified warranty period after final acceptance by the Owner. Failures include, but are not limited to, the following:

1. Structural failures including excessive deflection, cracking, or breakage.

2. Faulty operation of the hardware.

3. Deterioration of metals, metal finishes, and other materials beyond normal weathering.

4. Electrical component defects and failures within the systems operation.

C. Standard Warranty Period: One year from date of Substantial Completion, unless otherwise indicated.

D. Special Warranty Periods:

1. Five years for exit hardware.
2. Twenty five years for manual surface door closer bodies.
3. Two years for electromechanical door hardware.

PART 2 - PRODUCTS

2.01 SCHEDULED DOOR HARDWARE

A. General: Provide door hardware for each door to comply with requirements in Door Hardware Sets and each referenced section that products are to be supplied under.

B. Designations: Requirements for quantity, item, size, finish or color, grade, function, and other distinctive qualities of each type of door hardware are indicated in the Door Hardware Sets at the end of Part 3. Products are identified by using door hardware designations, as follows:

C. Named Manufacturer's Products: Product designation and manufacturer are listed for each door hardware type required for the purpose of establishing requirements. Manufacturers' names are abbreviated in the Door Hardware Schedule.

D. Substitutions: Requests for substitution and product approval for inclusive mechanical and electromechanical door hardware in compliance with the specifications must be submitted in writing and in accordance with the procedures and time frames outlined in Division 01, Substitution Procedures. Approval of requests is at the discretion of the architect, owner, and their designated consultants.

2.02 HANGING DEVICES

A. Hinges: ANSI/BHMA A156.1 certified butt hinges with number of hinge knuckles as specified in the Door Hardware Sets.

1. Quantity: Provide the following hinge quantity, unless otherwise indicated:
   a. Two Hinges: For doors with heights up to 60 inches.
   b. Three Hinges: For doors with heights 61 to 90 inches.
   c. Four Hinges: For doors with heights 91 to 120 inches.
   d. For doors with heights more than 120 inches, provide 4 hinges, plus 1 hinge for every 30 inches of door height greater than 120 inches.
2. Hinge Size: Provide the following, unless otherwise indicated, with hinge widths sized for door thickness and clearances required:
   a. Widths up to 3’0”: 4-1/2” standard or heavy weight as specified.
   b. Sizes from 3’1” to 4’0”: 5” standard or heavy weight as specified.
3. Hinge Weight and Base Material: Unless otherwise indicated, provide the following:
   a. Exterior Doors: Heavy weight, non-ferrous, ball bearing or oil impregnated bearing hinges unless Hardware Sets indicate standard weight.
   b. Interior Doors: Standard weight, steel, ball bearing or oil impregnated bearing hinges unless Hardware Sets indicate heavy weight.
4. Hinge Options: Comply with the following where indicated in the Hardware Sets or on Drawings:
   a. Non-removable Pins: Provide set screw in hinge barrel that, when tightened into a groove in hinge pin, prevents removal of pin while door is closed; for the all out-swinging lockable doors.

   Acceptable Manufacturers:

   b. Hager Companies (HA).
   c. McKinney Products (MK).

B. Pivots: ANSI/BHMA A156.4, Grade 1, certified. Space intermediate pivots equally not less than 25 inches on center apart or not more than 35 inches on center for doors over 121 inches high. Pivots to be UL listed for windstorm where applicable.

1. Acceptable Manufacturers:
   a. Rixson Door Controls (RF).

2.03 CYLINDERS AND KEYING

A. General: Cylinder manufacturer to have minimum (10) years experience designing secured master key

systems and have on record a published security keying system policy.

B. Source Limitations: Obtain each type of keyed cylinder and keys from the same source manufacturer as locksets and exit devices, unless otherwise indicated.

C. Cylinders: Original manufacturer cylinders complying with the following:

1. Mortise Type: Threaded cylinders with rings and cams to suit hardware application.
2. Rim Type: Cylinders with back plate, flat-type vertical or horizontal tailpiece, and raised trim ring.
3. Bored-Lock Type: Cylinders with tailpieces to suit locks.
4. Mortise and rim cylinder collars to be solid and recessed to allow the cylinder face to be flush and be free spinning with matching finishes.
5. Keyway:

D. Patented Cylinders: ANSI/BHMA A156.5, Grade 1, certified cylinders employing a utility patented and restricted keyway requiring the use of patented controlled keys. Provide bump resistant, fixed core cylinders as standard with solid recessed cylinder collars. Cylinders are to be factory keyed where permanent keying records will be established and maintained.

1. Provide a 6 pin multi-level master key system comprised of patented controlled keys and security and high security cylinders operated by one (1) key of the highest level. Geographical exclusivity to be provided for all security and high security cylinders and UL437 certification where specified.
    a. Level 1 Cylinders: Provide utility patented controlled keyway cylinders that are furnished with patented keys available only from authorized distribution.
    b. Level 2 Cylinders: Provide utility patented controlled keyway and side bar locking incorporating unique angled bottom pins for geographical exclusivity. Cylinders constructed to provide protection against bumping and picking.
    c. Level 3 Cylinders: Provide utility patented controlled keyway and side bar locking incorporating unique angled bottom pins for geographical exclusivity. Cylinders to be UL437 certified and constructed to provide protection against bumping, picking, and drilling.
    d. Refer to hardware sets for specified levels.
2. Acceptable Manufacturer:
    a. Sargent Manufacturing (SA) - Degree Series.
    b. Corbin Russwin (RU) – Access 3 Series.

E. Keying System: Each type of lock and cylinders to be factory keyed.

1. Conduct specified "Keying Conference" to define and document keying system instructions and requirements.
2. Furnish factory cut, nickel-silver large bow permanently inscribed with a visual key control number as directed by Owner.
3. New System: Key locks to a new key system as directed by the Owner.

F. Key Quantity: Provide the following minimum number of keys:

1. Change Keys per Cylinder: Two (2)
2. Master Keys (per Master Key Level/Group): Five (5).
3. Construction Keys (where required): Ten (10).

G. Construction Keying: Provide construction master keyed cylinders.

H. Key Registration List (Bitting List):

1. Provide keying transcript list to Owner's representative in the proper format for importing into key control software.
2. Provide transcript list in writing or electronic file as directed by the Owner.

I. Key Control Cabinet: Provide a key control system including envelopes, labels, and tags with self-locking key clips, receipt forms, 3-way visible card index, temporary markers, permanent markers, and standard metal cabinet. Key control cabinet shall have expansion capacity of 150% of the number of locks required for the project.

1. Acceptable Manufacturers:
    a. Lund Equipment (LU).
    b. MMF Industries (MM).
    c. Telkee (TK).

2.04 LOCK AND LATCH STRIKES

A. Strikes: Provide manufacturer's standard strike with strike box for each latch or lock bolt, with curved lip extended to protect frame, finished to match door hardware set, unless otherwise indicated, and as follows:

1. Flat-Lip Strikes: For locks with three-piece antifriction latchbolts, as recommended by manufacturer.
2. Extra-Long-Lip Strikes: For locks used on frames with applied wood casing trim.
3. Aluminum-Frame Strike Box: Provide manufacturer's special strike box fabricated for aluminum framing.

B. Standards: Comply with the following:

1. Strikes for Mortise Locks and Latches: BHMA A156.13.
2. Strikes for Bored Locks and Latches: BHMA A156.2.
3. Strikes for Auxiliary Deadlocks: BHMA A156.5.
4. Dustproof Strikes: BHMA A156.16.

2.05 CONVENTIONAL EXIT DEVICES

A. General Requirements: All exit devices specified herein shall meet or exceed the following criteria:

1. At doors not requiring a fire rating, provide devices complying with NFPA 101 and listed and labeled for "Panic Hardware" according to UL305. Provide proper fasteners as required by manufacturer including sex nuts and bolts at openings specified in the Hardware Sets.
2. Where exit devices are required on fire rated doors, provide devices complying with NFPA 80 and with UL labeling indicating "Fire Exit Hardware". Provide devices with the proper fasteners for installation as tested and listed by UL. Consult manufacturer’s catalog and template book for specific requirements.
    a. Fire Exit Removable Mullions: Provide keyed removable mullions for use with fire exit devices complying with NFPA 80 that are listed and labeled by a testing and inspecting agency acceptable to authorities having jurisdiction, for fire and panic protection, based on testing according to UL 305 and NFPA 252. Mullions to be used only with exit devices for which they have been tested.
3. Except on fire rated doors, provide exit devices with hex key dogging device to hold the pushbar and latch in a retracted position. Provide optional keyed cylinder dogging on devices where specified in Hardware Sets.
4. Devices must fit flat against the door face with no gap that permits unauthorized dogging of the push bar. The addition of filler strips is not acceptable except in any case where the door light extends behind the device as in a full glass configuration.
5. Flush End Caps: Provide heavy weight impact resistant flush end caps made of architectural metal in the same finish as the devices as in the Hardware Sets. Plastic end caps will not be acceptable.
6. Lever Operating Trim: Where exit devices require lever trim, furnish manufacturer's heavy duty escutcheon trim with four threaded studs for thru-bolts.
    a. Lock Trim Design: As indicated in Hardware Sets, provide finishes and designs to match that of the specified locksets. Provided free-wheeling type trim where indicated.
    b. Where function of exit device requires a cylinder, provide a cylinder (Rim or Mortise) as specified in Hardware Sets.
7. Vertical Rod Exit Devices: Provide and install interior surface and concealed vertical rod exit devices as Less Bottom Rod (LBR) unless otherwise indicated.
8. Narrow Stile Applications: At doors constructed with narrow stiles, or as specified in Hardware Sets, provide devices designed for maximum 2” wide stiles.
9. Dummy Push Bar: Nonfunctioning push bar matching functional push bar.
10. Rail Sizing: Provide exit device rails factory sized for proper door width application.
11. Through Bolt Installation: For exit devices and trim as indicated in Door Hardware Sets.

B. Conventional Push Rail Exit Devices (Heavy Duty): ANSI/BHMA A156.3, Grade 1 certified panic and fire exit hardware devices furnished in the functions specified in the Hardware Sets. Mounting rails to be formed from smooth stainless steel, brass or bronze architectural materials no less than 0.072" thick, with push rails a minimum of 0.062" thickness. Painted or aluminum metal rails are not acceptable. Exit device latch to be investment cast stainless steel, pullman type, with deadlock feature.

1. Acceptable Manufacturers:
    a. Corbin Russwin Hardware (RU) - ED4000 / ED5000 Series.
    b. Sargent Manufacturing (SA) - 80 Series.

C. Tube Steel Removable Mullions: ANSI/BHMA A156.3 removable steel mullions with malleable-iron top and bottom retainers and a primed paint finish. Provide keyed removable feature, stabilizers, and mounting brackets as specified in the Hardware Sets. At openings designed for severe wind load conditions due to hurricanes or tornadoes, provide manufacturers approved mullion and accessories to meet applicable state and local windstorm codes.
    1. Acceptable Manufacturers:
        a. Corbin Russwin Hardware (RU) - 700/900 Series.
        b. Sargent Manufacturing (SA) - 980S Series.

2.06 DOOR CLOSERS

A. All door closers specified herein shall meet or exceed the following criteria:
    1. General: Door closers to be from one manufacturer, matching in design and style, with the same type door preparations and templates regardless of application or spring size. Closers to be non-handed with full sized covers including installation and adjusting information on inside of cover.
    2. Standards: Closers to comply with UL-10C and UBC 7-2 for Positive Pressure Fire Test and be U.L. listed for use of fire rated doors.
    3. Cycle Testing: Provide closers which have surpassed 15 million cycles in a test witnessed and verified by UL.
    4. Size of Units: Comply with manufacturer's written recommendations for sizing of door closers depending on size of door, exposure to weather, and anticipated frequency of use. Where closers are indicated for doors required to be accessible to the physically handicapped, provide units complying with ANSI ICC/A117.1.
    5. Closer Arms: Provide heavy duty, forged steel closer arms unless otherwise indicated in Hardware Sets.
        a. Where closers are indicated to have mechanical dead-stop, provide heavy duty arms and brackets with an integral positive stop.
        b. Where closers are indicated to have mechanical hold open, provide heavy duty units with an additional built-in mechanical holder assembly designed to hold open against normal wind and traffic conditions. Holder to be manually selectable to on-off position.
        c. Where closers are indicated to have a cushion-type stop, provide heavy duty arms and brackets with spring stop mechanism to cushion door when opened to maximum degree.
        d. Closers shall not be installed on exterior or corridor side of doors; where possible install closers on door for optimum aesthetics. Provide drop plates or other accessories as required for proper mounting.
    6. Closer Accessories: Provide door closer accessories including custom templates, special mounting brackets, spacers and drop plates, and through-bolt or security type fasteners as REQUIRED FOR EACH OPENINGS APPLICATION.

B. Door Closers, Surface Mounted (Heavy Duty): ANSI/BHMA A156.4, Grade 1 surface mounted, heavy duty door closers with complete spring power adjustment, sizes 1 thru 6; and fully operational adjustable according to door size, frequency of use, and opening force. Closers to be rack and pinion type, one piece cast iron or aluminum alloy body construction, with adjustable backcheck and separate non-critical valves for closing sweep and latch speed control. Provide non-handed units standard.
    1. Acceptable Manufacturers:
        a. Corbin Russwin Hardware (RU) - DC8000 Series.
        b. Sargent Manufacturing (SA) - 351 Series.
        c. Norton Door Controls (NO) - 7500 Series.

2.07 AUTOMATIC DOOR OPERATORS

A. General: Provide operators of size recommended by manufacturer for door size, weight, and movement; for condition of exposure; and for compliance with UL 325. Coordinate operator mechanisms with door operation, hinges, and activation devices.
    1. Fire-Rated Doors: Provide door operators for fire-rated door assemblies that comply with NFPA 80 for fire-rated door components and are listed and labeled by a qualified testing agency.

B. Electrohydraulic Door Operators: Self-contained low-pressure units with rack and pinion design contained within a cast aluminum housing. Door closing speed controlled by independent hydraulic adjustment valves in the sweep and latch range of the closing cycle. Operator is to provide conventional door closer opening and closing forces unless the power operator motor is activated. Unit is to include an adjustable hydraulic backcheck valve to cushion the door speed if opened violently. Non-handed units for both push and pull side applications.

C. Brackets and Reinforcements: Manufacturer's standard, fabricated from aluminum with nonferrous shims for aligning system components.

D. Standard: Certified ANSI/BHMA A156.19.

1. Performance Requirements:

a. Opening Force if Power Fails: Not more than 15 lbf required to release a latch if provided, not more than 30 lbf required to manually set door in motion, and not more than 15 lbf required to fully open door.

b. Entrapment Protection: Not more than 15 lbf required to prevent stopped door from closing or opening.

E. Configuration: Surface mounted. Door operators to control single swinging and pair of swinging doors.

F. Operation: Power opening and spring closing operation capable of meeting ANSI A117.1 accessibility guideline. Provide time delay for door to remain open before initiating closing cycle as required by ANSI/BHMA A156.19. When not in automatic mode, door operator to function as manual door closer with fully adjustable opening and closing forces, with or without electrical power.

1. On-off switch to control power to be key switch operated.

G. Features: Operator units to have full feature adjustments for door opening and closing force and speed, backcheck, motor assist acceleration from 0 to 30 seconds, time delay, vestibule interface delay, obstruction recycle, and hold open time from 0 up to 30 seconds.

H. Provide outputs and relays on board the operator to allow for coordination of exit device latch retraction, electric strikes, magnetic locks, card readers, safety and motion sensors and specified auxiliary contacts.

I. Activation Devices: Provide activation devices in accordance with ANSI/BHMA A156.19 standard, for condition of exposure indicated and for long term, maintenance free operation under normal traffic load operation. Coordinate activation control with electrified hardware and access control interfaces. Activation switches are standard SPST, with optional DPDT availability.

J. Signage: As required by cited ANSI/BHMA A156.19 standard for the type of operator.

1. Acceptable Manufacturers:

a. Norton Door Controls (NO) - 6000 Series.

2.08 DOOR STOPS AND HOLDERS

A. General: Door stops and holders to be of type and design as specified below or in the Hardware Sets.

B. Door Stops and Bumpers: ANSI/BHMA A156.16, Grade 1 certified door stops and wall bumpers. Provide wall bumpers, either convex or concave types with anchorage as indicated, unless floor or other types of door stops are specified in Hardware Sets. Do not mount floor stops where they will impede traffic. Where floor or wall bumpers are not appropriate, provide overhead type stops and holders.

1. Acceptable Manufacturers:

a. Rockwood Manufacturing (RO).

b. Trimco (TC).

2.09 ARCHITECTURAL SEALS

A. General: Thresholds, weatherstripping, and gasket seals to be of type and design as specified below or in the Hardware Sets. Provide continuous weatherstrip gasketing on exterior doors and provide smoke, light, or sound gasketing on interior doors where indicated. At exterior applications provide non-corrosive fasteners and elsewhere where indicated.

B. Smoke Labeled Gasketing: Assemblies complying with NFPA 105 that are listed and labeled by a testing and inspecting agency acceptable to authorities having jurisdiction, for smoke control ratings indicated, based on testing according to UL 1784.

1. Provide smoke labeled perimeter gasketing at all smoke labeled openings.

C. Fire Labeled Gasketing: Assemblies complying with NFPA 80 that are listed and labeled by a testing and inspecting agency acceptable to authorities having jurisdiction, for fire ratings indicated, based on testing according to UL-10C.

1. Provide intumescent seals as indicated to meet UL10C Standard for Positive Pressure Fire Tests of

Door Assemblies, and UBC 7-2, Fire Tests of Door Assemblies.

D. Sound-Rated Gasketing: Assemblies that are listed and labeled by a testing and inspecting agency, for sound ratings indicated, based on testing according to ASTM E 1408.

E. Replaceable Seal Strips: Provide only those units where resilient or flexible seal strips are easily replaceable and readily available from stocks maintained by manufacturer.

F. Acceptable Manufacturers:

1. National Guard Products (NG).

2. Pemko Manufacturing (PE).

2.10 FABRICATION

A. Fasteners: Provide door hardware manufactured to comply with published templates generally prepared for machine, wood, and sheet metal screws. Provide screws according to manufacturers recognized installation standards for application intended.

2.11 FINISHES

A. Standard: Designations used in the Hardware Sets and elsewhere indicate hardware finishes complying with ANSI/BHMA A156.18, including coordination with traditional U.S. finishes indicated by certain manufacturers for their products.

B. Provide quality of finish, including thickness of plating or coating (if any), composition, hardness, and other qualities complying with manufacturer's standards, but in no case less than specified by referenced standards for the applicable units of hardware.

C. Protect mechanical finishes on exposed surfaces from damage by applying a strippable, temporary protective covering before shipping.

PART 3 - EXECUTION

3.01 EXAMINATION

A. Examine scheduled openings, with Installer present, for compliance with requirements for installation tolerances, labeled fire door assembly construction, wall and floor construction, and other conditions affecting performance.

B. Notify architect of any discrepancies or conflicts between the door schedule, door types, drawings and scheduled hardware. Proceed only after such discrepancies or conflicts have been resolved in writing.

3.02 PREPARATION

A. Hollow Metal Doors and Frames: Comply with ANSI/DHI A115 series.

B. Wood Doors: Comply with ANSI/DHI A115-W series.

3.03 INSTALLATION

A. Install each item of mechanical and electromechanical hardware and access control equipment to comply with manufacturer's written instructions and according to specifications.

1. Installers are to be trained and certified by the manufacturer on the proper installation and adjustment of fire, life safety, and security products including: hanging devices; locking devices; closing devices; and seals.

B. Mounting Heights: Mount door hardware units at heights indicated in following applicable publications, unless specifically indicated or required to comply with governing regulations:

1. Standard Steel Doors and Frames: DHI's "Recommended Locations for Architectural Hardware for Standard Steel Doors and Frames."

2. Wood Doors: DHI WDHS.3, "Recommended Locations for Architectural Hardware for Wood Flush Doors."

3. Where indicated to comply with accessibility requirements, comply with ANSI A117.1 "Accessibility Guidelines for Buildings and Facilities."

4. Provide blocking in drywall partitions where wall stops or other wall mounted hardware is located.

C. Retrofitting: Install door hardware to comply with manufacturer's published templates and written instructions. Where cutting and fitting are required to install door hardware onto or into surfaces that are later to be painted or finished in another way, coordinate removal, storage, and reinstallation of surface protective trim units with finishing work specified in Division 9 Sections. Do not install surface-mounted items until finishes have been completed on substrates involved.

D. Thresholds: Set thresholds for exterior and acoustical doors in full bed of sealant complying with

requirements specified in Division 7 Section "Joint Sealants."

E. Storage: Provide a secure lock up for hardware delivered to the project but not yet installed. Control the handling and installation of hardware items so that the completion of the work will not be delayed by hardware losses before and after installation.

3.04 FIELD QUALITY CONTROL

A. Field Inspection: Supplier will perform a final inspection of installed door hardware and state in report whether work complies with or deviates from requirements, including whether door hardware is properly installed, operating and adjusted.

3.05 ADJUSTING

A. Initial Adjustment: Adjust and check each operating item of door hardware and each door to ensure proper operation or function of every unit. Replace units that cannot be adjusted to operate as intended. Adjust door control devices to compensate for final operation of heating and ventilating equipment and to comply with referenced accessibility requirements.

3.06 CLEANING AND PROTECTION

A. Protect all hardware stored on construction site in a covered and dry place. Protect exposed hardware installed on doors during the construction phase. Install any and all hardware at the latest possible time frame.

B. Clean adjacent surfaces soiled by door hardware installation.

C. Clean operating items as necessary to restore proper finish. Provide final protection and maintain conditions that ensure door hardware is without damage or deterioration at time of owner occupancy.

3.07 DOOR HARDWARE SCHEDULE

A. The hardware sets represent the design intent and direction of the owner and architect. They are a guideline only and should not be considered a detailed hardware schedule. Discrepancies, conflicting hardware and missing items should be brought to the attention of the architect with corrections made prior to the bidding process. Omitted items not included in a hardware set should be scheduled with the appropriate additional hardware required for proper application and functionality.

B. Manufacturer's Abbreviations:

1. MK - McKinney
2. RF - Rixson
3. RU - Corbin Russwin
4. NO - Norton
5. RO - Rockwood
6. PE - Pemko

Hardware Schedule

Set: 1.0

END OF SECTION

PART 1 - GENERAL

1.01 RELATED DOCUMENTS

A. Drawings and general provisions of the Contract, including General and Supplementary Conditions and Division 01 Specification Sections, apply to this Section.

1.02 SUMMARY

A. Section includes glazing for the following products and applications, including those specified in other Sections where glazing requirements are specified by reference to this Section:

1. Windows.
2. Doors.
3. Storefront framing.
4. Glazed entrances.
5. Interior borrowed lites.
6. Sliding display doors.
7. Glazed Shelving.

1.03 REFERENCE STANDARDS

(Current Edition at Date of Bid)

A. 16 CFR 1201 - Safety Standard for Architectural Glazing Materials.

B. ANSI Z97.1 - American National Standard for Safety Glazing Materials Used in Buildings, Safety Performance Specifications and Methods of Test.

C. ASCE 7 - Minimum Design Loads for Buildings and Other Structures.

D. ASTM C864 - Standard Specification for Dense Elastomeric Compression Seal Gaskets, Setting Blocks, and Spacers.

F. ASTM C1036 - Standard Specification for Flat Glass.

F. ASTM C1048 - Standard Specification for Heat-Treated Flat Glass--Kind HS, Kind FT Coated and Uncoated Glass.

G. ASTM C1172 - Standard Specification for Laminated Architectural Flat Glass.

H. ASTM E1300 - Standard Practice for Determining Load Resistance of Glass in Buildings.

I. ASTM E2190 - Standard Specification for Insulating Glass Unit Performance and Evaluation.

J. GANA (GM) - GANA Glazing Manual; Glass Association of North America.

K. GANA (SM) - GANA Sealant Manual; Glass Association of North America.

1.04 SUBMITTALS

A. Product Data: For each glass product and glazing material indicated.

B. Glass Samples: For each type of glass product other than clear monolithic vision glass; 12 inches square.

C. Glazing Schedule: List glass types and thicknesses for each size opening and location. Use same designations indicated on Drawings.

1.05 QUALITY ASSURANCE

A. Glazing Publications: Comply with published recommendations of glass product manufacturers and organizations below, unless more stringent requirements are indicated. Refer to these publications for glazing terms not otherwise defined in this Section or in referenced standards.

1. GANA Publications: GANA's "Laminated Glazing Reference Manual" and GANA's "Glazing Manual."
2. IGMA Publication for Insulating Glass: SIGMA TM-3000, "North American Glazing Guidelines for Sealed Insulating Glass Units for Commercial and Residential Use."

B. Safety Glazing Labeling: Where safety glazing labeling is indicated, permanently mark glazing with certification label of the SGCC or the manufacturer. Label shall indicate manufacturer's name, type of glass, thickness, and safety glazing standard with which glass complies.

C. Fire-Protection-Rated Glazing Labeling: Permanently mark fire-protection-rated glazing with certification label of a testing agency acceptable to authorities having jurisdiction. Label shall indicate manufacturer's

name, test standard, whether glazing is for use in fire doors or other openings, whether or not glazing passes hose-stream test, whether or not glazing has a temperature rise rating of 450 deg F (250 deg C), and the fire-resistance rating in minutes.

D. Insulating-Glass Certification Program: Permanently marked either on spacers or on at least one component lite of units with appropriate certification label of IGCC.

1.06 FIELD CONDITIONS

A. Do not install glazing when ambient temperature is less than50 degrees F.

B. Maintain minimum ambient temperature before, during and24 hours after installation of glazing compounds.

1.07 WARRANTY

A. Manufacturer's Special Warranty for Coated-Glass Products: Manufacturer's standard form in which coated-glass manufacturer agrees to replace coated-glass units that deteriorate within specified warranty period. Deterioration of coated glass is defined as defects developed from normal use that are not attributed to glass breakage or to maintaining and cleaning coated glass contrary to manufacturer's written instructions. Defects include peeling, cracking, and other indications of deterioration in coating.

1. Warranty Period: 10 years from date of Substantial Completion.

B. Manufacturer's Special Warranty on Laminated Glass: Manufacturer's standard form in which laminated-glass manufacturer agrees to replace laminated-glass units that deteriorate within specified warranty period. Deterioration of laminated glass is defined as defects developed from normal use that are not attributed to glass breakage or to maintaining and cleaning laminated glass contrary to manufacturer's written instructions. Defects include edge separation, delamination materially obstructing vision through glass, and blemishes exceeding those allowed by referenced laminated-glass standard.

1. Warranty Period: 10 years from date of Substantial Completion.

C. Manufacturer's Special Warranty on Insulating Glass: Manufacturer's standard form in which insulating-glass manufacturer agrees to replace insulating-glass units that deteriorate within specified warranty period. Deterioration of insulating glass is defined as failure of hermetic seal under normal use that is not attributed to glass breakage or to maintaining and cleaning insulating glass contrary to manufacturer's written instructions. Evidence of failure is the obstruction of vision by dust, moisture, or film on interior surfaces of glass.

1. Warranty Period: 10 years from date of Substantial Completion.

PART 2 - PRODUCTS

2.01 GLASS PRODUCTS, GENERAL

A. Thickness: Where glass thickness is indicated, it is a minimum. Provide glass lites in thicknesses as needed to comply with requirements indicated.

B. Strength: Where float glass is indicated, provide annealed float glass, Kind HS heat-treated float glass, or Kind FT heat-treated float glass. Where heat-strengthened glass is indicated, provide Kind HS heat-treated float glass or Kind FT heat-treated float glass. Where fully tempered glass is indicated, provide Kind FT heat-treated float glass.

C. Thermal and Optical Performance Properties: Provide glass with performance properties specified, as indicated in manufacturer's published test data, based on procedures indicated below:

1. U-Factors: Center-of-glazing values, according to NFRC 100 and based on LBL's WINDOW 5.2 computer program, expressed as Btu/ft^2. x h x deg F.

2. Solar Heat-Gain Coefficient and Visible Transmittance: Center-of-glazing values, according to NFRC 200 and based on LBL's WINDOW 5.2 computer program.

3. Visible Reflectance: Center-of-glazing values, according to NFRC 300.

2.02 GLASS PRODUCTS

A. Float Glass: ASTM C1036, Type I, Quality-Q3, Class I (clear) unless otherwise indicated.

1. Products: Subject to compliance with requirements, provide from one of the following unless otherwise stated:

a. AFG Industries, Inc.

b. Guardian Industries Corp.

c. Pilkington North America

d. PPG Industries, Inc.

B. Heat-Treated Float Glass: ASTM C1048; Type I; Quality-Q3; Class I (clear) unless otherwise indicated; of

kind and condition indicated.

1. Fabrication Process: By horizontal (roller-hearth) process with roll-wave distortion parallel to bottom edge of glass as installed unless otherwise indicated.
2. For uncoated glass, comply with requirements for Condition A.
3. For coated vision glass, comply with requirements for Condition C (other coated glass).

C. Uncoated Tinted Float Glass: Class 2, complying with other requirements specified.

1. Product: Subject to compliance with requirements, provide from one of the following unless otherwise stated:
   a. PPG Industries, Inc.
   b. Guardian Industries Corp.

D. Ceramic-Coated Spandrel Glass: ASTM C 1048, Condition B, Type I, Quality-Q3, and complying with other requirements specified.

1. Product: Subject to compliance with requirements, provide from one of the following unless otherwise stated:
   a. Oldcastle Building Envelope
   b. Vitro America
   c. Craftsman Fabricated Glass, Ltd.

2.03 LAMINATED GLASS

A. Manufacturers: Subject to compliance with requirements, provide products by one of the following unless otherwise stated:

1. Oldcastle Building Envelope, www.oldcastleglass.com
2. Vitro America, www.vitroamerica.com
3. Craftsman Fabricated Glass, Ltd., www.craftsmanfab.com
4. Guardian Industries Corp., www.guardian.com

B. Laminated Glass: ASTM C1172, and complying with testing requirements in 16 CFR 1201 for Category II materials, and with other requirements specified. Use materials that have a proven record of no tendency to bubble, discolor, or lose physical and mechanical properties after fabrication and installation.

1. Construction: Laminate glass with polyvinyl butyral interlayer to comply with interlayer manufacturer's written recommendations.
2. Interlayer Thickness: Provide thickness not less than that indicated and as needed to comply with requirements.
3. Interlayer Color: Clear.

C. Windborne-Debris-Impact-Resistant Laminated Glass: ASTM C 1172, and complying with testing requirements in 16 CFR 1201 for Category II materials, with "Windborne-Debris-Impact Resistance" Paragraph in "Glass Products, General" Article, and with other requirements specified. Use materials that have a proven record of no tendency to bubble, discolor, or lose physical and mechanical properties after fabrication and installation.

1. Construction: Laminate glass with interlayer to comply with requirements, per the manufacturer's written recommendations.
2. Interlayer Thickness: Provide thickness not less than that indicated and as needed to comply with requirements.
3. Interlayer Color: Clear unless otherwise indicated.

D. Glass: Comply with applicable requirements in "Glass Products" Article as indicated by designations in "Laminated-Glass Types" Article.

2.04 INSULATING GLASS

A. Manufacturers: Subject to compliance with requirements, provide products by one of the following unless otherwise stated:

1. Oldcastle Building Envelope
2. Vitro America
3. Craftsman Fabricated Glass, Ltd.
4. Guardian Industries Corp.
5. PPG Industries, Inc.

B. Insulating-Glass Units: Factory-assembled units consisting of sealed lites of glass separated by a dehydrated interspace, qualified according to ASTM E2190, and complying with other requirements specified.

1. Sealing System: Dual seal, with polyisobutylene and silicone polyisobutylene and hotmelt butyl polyisobutylene and polyurethane primary and secondary.

2. Spacer: Aluminum with mill or clear anodic finish.

3. Desiccant: Molecular sieve or silica gel, or blend of both.

C. Glass: Comply with applicable requirements in "Glass Products" Article as indicated by designations in "Insulating-Glass Types" Article.

2.05 FIRE-PROTECTION-RATED GLAZING

A. Fire-Protection-Rated Glazing, General: Listed and labeled by a testing agency acceptable to authorities having jurisdiction, for fire-protection ratings indicated, based on testing according to NFPA 252 for door assemblies and NFPA 257 for window assemblies.

B. Monolithic Ceramic Glazing: Clear, ceramic flat glass; 3/16-inch nominal thickness.

1. Products: Subject to compliance with requirements, provide from one of the following unless otherwise stated:

a. Nippon Electric Glass Co., Ltd. (distributed by Technical Glass Products), www.fireglass.com

b. Schott North America, Inc., www.us.schott.com

c. Vetrotech Saint-Gobain, www.vetrotechusa.com

C. Film-Faced Ceramic Glazing: Clear, ceramic flat glass; 3/16-inch nominal thickness; faced on one surface with a clear glazing film; complying with testing requirements in 16 CFR 1201 for Category II materials.

1. Products: Subject to compliance with requirements, provide from one of the following unless otherwise stated:

a. Nippon Electric Glass Co., Ltd. (distributed by Technical Glass Products), www.fireglass.com

b. Schott North America, Inc., www.us.schott.com

c. Vetrotech Saint-Gobain, www.vetrotechusa.com

D. Laminated Ceramic Glazing: Laminated glass made from 2 plies of clear, ceramic flat glass; 5/16-inch total nominal thickness; complying with testing requirements in 16 CFR 1201 for Category II materials.

1. Products: Subject to compliance with requirements, provide from one of the following unless otherwise stated:

a. Nippon Electric Glass Co., Ltd. (distributed by Technical Glass Products), www.fireglass.com

b. Schott North America, Inc., www.us.schott.com

c. Vetrotech Saint-Gobain, www.vetrotechusa.com

E. Fire-Protection-Rated Laminated Glass: 5/16-inch- thick, fire-protection-rated laminated glass, complying with testing requirements in 16 CFR 1201 for Category II materials.

1. Products: Subject to compliance with requirements, provide the from following unless otherwise stated:

a. Oldcastle Glass, Inc.

2.06 GLAZING GASKETS

A. Dense Compression Gaskets: Molded or extruded gaskets of profile and hardness required to maintain watertight seal, made from[one of] the following:

1. Neoprene complying with ASTM C864.

2. EPDM complying with ASTM C864.

3. Silicone complying with ASTM C1115.

4. Thermoplastic polyolefin rubber complying with ASTM C1115.

B. Soft Compression Gaskets: Extruded or molded, closed-cell, integral-skinned neoprene gaskets complying with ASTM C 509, Type II, black; of profile and hardness required to maintain watertight seal.

1. Application: Use where soft compression gaskets will be compressed by inserting dense compression gaskets on opposite side of glazing or pressure applied by means of pressure-glazing stops on opposite side of glazing.

2.07 GLAZING SEALANTS

A. General:

1. Compatibility: Provide glazing sealants that are compatible with one another and with other materials they will contact, including glass products, seals of insulating-glass units, and glazing channel substrates, under conditions of service and application, as demonstrated by sealant manufacturer based on testing and field experience.
2. Suitability: Comply with sealant and glass manufacturers' written instructions for selecting glazing sealants suitable for applications indicated and for conditions existing at time of installation.
3. Sealants used inside the weatherproofing system, shall have a VOC content of not more than 250 g/L when calculated according to 40 CFR 59, Subpart D (EPA Method 24).
4. Sealants used inside the weatherproofing system shall comply with the testing and product requirements of the California Department of Health Services' "Standard Practice for the Testing of Volatile Organic Emissions from Various Sources Using SmallScale Environmental Chambers."
5. Colors of Exposed Glazing Sealants: As selected by Architect from manufacturer's full range.

B. Glazing Sealant: Neutral-curing silicone glazing sealant complying with ASTM C 920, Type S, Grade NS, Class 25, Use NT.

1. Products: Subject to compliance with requirements, provide from one of the following unless otherwise stated:
   a. Dow Corning Corporation
   b. GE Advanced Materials - Silicones
   c. Tremco Incorporated

C. Glazing Sealants for Fire-Rated Glazing Products: Products that are approved by testing agencies that listed and labeled fire-resistant glazing products with which they are used for applications and fire-protection ratings indicated.

2.08 GLAZING TAPES

A. Back-Bedding Mastic Glazing Tapes: Preformed, butyl-based, 100 percent solids elastomeric tape; nonstaining and nonmigrating in contact with nonporous surfaces; with or without spacer rod as recommended in writing by tape and glass manufacturers for application indicated; and complying with ASTM C1281 and AAMA 800 for products indicated below:

1. AAMA 804.3 tape, where indicated.
2. AAMA 806.3 tape, for glazing applications in which tape is subject to continuous pressure.
3. AAMA 807.3 tape, for glazing applications in which tape is not subject to continuous pressure.

B. Expanded Cellular Glazing Tapes: Closed-cell, PVC foam tapes; factory coated with adhesive on both surfaces; and complying with AAMA 800 for the following types:

1. AAMA 810.1, Type 1, for glazing applications in which tape acts as the primary sealant.
2. AAMA 810.1, Type 2, for glazing applications in which tape is used in combination with a full bead of liquid sealant.

2.09 MISCELLANEOUS GLAZING MATERIALS

A. Cleaners, Primers, and Sealers: Types recommended by sealant or gasket manufacturer.

B. Cleaners, Primers, and Sealers: Types recommended by sealant or gasket manufacturer.

C. Setting Blocks: Elastomeric material with a Shore, Type A durometer hardness of 85, plus or minus 5.

D. Spacers: Elastomeric blocks or continuous extrusions of hardness required by glass manufacturer to maintain glass lites in place for installation indicated.

E. Edge Blocks: Elastomeric material of hardness needed to limit glass lateral movement (side walking).

F. Cylindrical Glazing Sealant Backing: ASTM C1330, Type O (open-cell material), of size and density to control glazing sealant depth and otherwise produce optimum glazing sealant performance.

G. Perimeter Insulation for Fire-Resistive Glazing: Product that is approved by testing agency that listed and labeled fire-resistant glazing product with which it is used for application and fire-protection rating indicated.

2.10 FABRICATION OF GLAZING UNITS

A. Fabricate glazing units in sizes required to fit openings indicated for Project, with edge and face clearances, edge and surface conditions, and bite complying with written instructions of product manufacturer and referenced glazing publications, to comply with system performance requirements.

B. Clean-cut or flat-grind vertical edges of butt-glazed monolithic lites to produce square edges with slight chamfers at junctions of edges and faces.

C. Grind smooth and polish exposed glass edges and corners.

2.11 MONOLITHIC-GLASS TYPES

A. Glass Type G1: Clear fully tempered float glass.

1. Thickness: 1/4 inch.
2. Provide safety glazing labeling.

2.12 INSULATING-GLASS TYPES

A. Glass Type G2: 1" Insulated, Guardian SunGuard, CrystalGray, SNR 43, Low-E, tempered

1. Overall Unit Thickness: 1 inch.
2. Thickness of Each Glass Lite: 1/4 inch.
3. Outboard Lite: Float glass, sputtered on second surface.
4. Interspace Content: Air.
5. Inboard Lite: Fully tempered float glass.
6. Provide safety glazing labeling.

B. Other products of the basis of design manufacturer and products of other manufacturers will be considered provided the overall performance is within the specified range(s) and the overall appearance is not significantly different from that of the specified product.

C. Architect's decision on substitutions is final.

PART 3 - EXECUTION

3.01 GLAZING, GENERAL

A. Comply with combined written instructions of manufacturers of glass, sealants, gaskets, and other glazing materials, unless more stringent requirements are indicated, including those in referenced glazing publications.

B. Adjust glazing channel dimensions as required by Project conditions during installation to provide necessary bite on glass, minimum edge and face clearances, and adequate sealant thicknesses, with reasonable tolerances.

C. Protect glass edges from damage during handling and installation. Remove damaged glass from Project site and legally dispose of off Project site. Damaged glass is glass with edge damage or other imperfections that, when installed, could weaken glass and impair performance and appearance.

D. Apply primers to joint surfaces where required for adhesion of sealants, as determined by preconstruction testing.

E. Install setting blocks in sill rabbets, sized and located to comply with referenced glazing publications, unless otherwise required by glass manufacturer. Set blocks in thin course of compatible sealant suitable for heel bead.

F. Do not exceed edge pressures stipulated by glass manufacturers for installing glass lites.

G. Provide spacers for glass lites where length plus width is larger than 50 inches.

H. Provide edge blocking where indicated or needed to prevent glass lites from moving sideways in glazing channel, as recommended in writing by glass manufacturer and according to requirements in referenced glazing publications.

3.02 TAPE GLAZING

A. Position tapes on fixed stops so that, when compressed by glass, their exposed edges are flush with or protrude slightly above sightline of stops.

B. Install tapes continuously, but not necessarily in one continuous length. Do not stretch tapes to make them fit opening.

C. Cover vertical framing joints by applying tapes to heads and sins first and then to jambs. Cover horizontal framing joints by applying tapes to jambs and then to heads and sills.

D. Place joints in tapes at comers of opening with adjoining lengths butted together, not lapped. Seal joints in tapes with compatible sealant approved by tape manufacturer.

E. Apply heel bead of elastomeric sealant.

F. Center glass lites in openings on setting blocks and press firmly against tape by inserting dense compression gaskets formed and installed to lock in place against faces of removable stops. Start gasket

applications at comers and work toward centers of openings.

G. Apply cap bead of elastomeric sealant over exposed edge of tape.

3.03 GASKET GLAZING (DRY)

A. Cut compression gaskets to lengths recommended by gasket manufacturer to fit openings exactly, with allowance for stretch during installation.

B. Insert soft compression gasket between glass and frame or fixed stop so it is securely in place with joints miter cut and bonded together at comers.

C. Installation with Drive-in Wedge Gaskets: Center glass lites in openings on setting blocks and press firmly against soft compression gasket by inserting dense compression gaskets formed and installed to lock in place against faces of removable stops. Start gasket applications at corners and work toward centers of openings. Compress gaskets to produce a weathertight seal without developing bending stresses in glass. Seal gasket joints with sealant recommended by gasket manufacturer.

D. Installation with Pressure-Glazing Stops: Center glass lites in openings on setting blocks and press firmly against soft compression gasket. Install dense compression gaskets and pressure-glazing stops, applying pressure uniformly to compression gaskets. Compress gaskets to produce a weathertight seal without developing bending stresses in glass. Seal gasket joints with sealant recommended by gasket manufacturer.

E. Install gaskets so they protrude past face of glazing stops.

3.04 SEALANT GLAZING (WET)

A. Install continuous spacers, or spacers combined with cylindrical sealant backing, between glass lites and glazing stops to maintain glass face clearances and to prevent sealant from extruding into glass channel and blocking weep systems until sealants cure. Secure spacers or spacers and backings in place and in position to control depth of installed sealant relative to edge clearance for optimum sealant performance.

B. Force sealants into glazing channels to eliminate voids and to ensure complete wetting or bond of sealant to glass and channel surfaces.

C. Tool exposed surfaces of sealants to provide a substantial wash away from glass.

3.05 CLEANING AND PROTECTION

A. Protect exterior glass from damage immediately after installation by attaching crossed streamers to framing held away from glass. Do not apply markers to glass surface. Remove nonpermanent labels and clean surfaces.

B. Protect glass from contact with contaminating substances resulting from construction operations. If, despite such protection, contaminating substances do come into contact with glass, remove substances immediately as recommended in writing by glass manufacturer.

C. Examine glass surfaces adjacent to or below exterior concrete and other masonry surfaces at frequent intervals during construction, but not less than once a month, for buildup of dirt, scum, alkaline deposits, or stains; remove as recommended in writing by glass manufacturer.

D. Remove and replace glass that is broken, chipped, cracked, or abraded or that is damaged from natural causes, accidents, and vandalism, during construction period.

END OF SECTION

----------THIS PAGE LEFT INTENTIONALLY BLANK----------

PART 1 – GENERAL

1.01 RELATED DOCUMENTS

A. Drawings and general provisions of the Contract, including General and Supplementary Conditions and Division 01 Specification Sections, apply to this Section.

1.02 SUMMARY

A. Section includes the following types of silvered flat glass mirrors:

1. Annealed monolithic glass mirrors.

1.03 QUALITY ASSURANCE

A. Glazing Publications: Comply with GANA's "Glazing Manual" and "Mirrors, Handle with Extreme Care: Tips for the Professional on the Care and Handling of Mirrors."

B. Safety Glazing Products: For mirrors, provide products complying with testing requirements in 16 CFR 1201 for Category II materials.

1.04 WARRANTY

A. Special Warranty: Manufacturer's standard form in which mirror manufacturer agrees to replace mirrors that deteriorate within specified warranty period. Deterioration of mirrors is defined as defects developed from normal use that are not attributed to mirror breakage or to maintaining and cleaning mirrors contrary to manufacturer's written instructions. Defects include discoloration, black spots, and clouding of the silver film.

1. Warranty Period: Five years from date of Substantial Completion.

PART 2 - PRODUCTS

2.01 SILVERED FLAT GLASS MIRRORS

A. Glass Mirrors, General: ASTM C 1503; manufactured using copper-free, low-lead mirror coating process.

B. Clear Glass: Mirror Select Quality.

1. Nominal Thickness: 1/4 inch.

2.02 FABRICATION

A. Cutouts: Fabricate cutouts for notches and holes in mirrors without marring visible surfaces. Locate and size cutouts so they fit closely around penetrations in mirrors.

B. Mirror Edge: As indicated in drawings, Seal edges of mirrors with edge sealer if edge treatment exist.

PART 3 - EXECUTIQN

3.01 INSTALLATIQN

A. Examine substrates, over which mirrors are to be mounted, with Installer present, for compliance with installation tolerances, substrate preparation, and other conditions affecting performance of the Work.

1. Verify compatibility with and suitability of substrates, including compatibility of mirror mastic with existing finishes or primers.

2. Proceed with installation only after unsatisfactory conditions have been corrected and surfaces are dry.

B. Comply with mastic manufacturer's written installation instructions for preparation of substrates, including coating substrates with mastic manufacturer's special bond coating where applicable.

C. General: Install mirrors to comply with mirror manufacturer's written instructions and with referenced GANA publications. Mount mirrors accurately in place in a manner that avoids distorting reflected images.

D. Wall-Mounted Mirrors: Install mirrors with mastic. Apply mastic to comply with mastic manufacturer's written instructions for coverage and to allow air circulation between back of mirrors and face of mounting surface.

E. Protect mirrors from breakage and contaminating substances resulting from construction operations.

F. Do not permit edges of mirrors to be exposed to standing water.

G. Maintain environmental conditions that win prevent mirrors from being exposed to moisture from

condensation or other sources for continuous periods of time.

H. Wash exposed surface of mirrors not more than four days before date scheduled for inspections that establish date of Substantial Completion. Wash mirrors as recommended in writing by mirror manufacturer.

END OF SECTION

PART 1 - GENERAL

1.01 RELATED DOCUMENTS

A. Drawings and general provisions of the Contract, including General and Supplementary Conditions and Division 01 Specification Sections, apply to this Section.

1.02 SUMMARY

A. Section Includes:

1. Non-load-bearing steel framing systems for interior gypsum and plywood wall board assemblies.
2. Suspension systems for interior gypsum ceilings, soffits, and grid systems.

B. Related Requirements:

1. Section 05 40 00 - Cold-Formed Metal Framing for exterior and interior load-bearing and exterior non-load-bearing wall studs and ceiling joists.

1.03 ACTION SUBMITTALS

A. Product Data: For each type of product.

PART 2 -PRODUCTS

2.01 PERFORMANCE REQUIREMENTS

A. Fire-Test-Response Characteristics: For fire-resistance-rated assemblies that incorporate non-load-bearing steel framing, provide materials and construction identical to those tested in assembly indicated, according to ASTM E119 by an independent testing agency.

B. STC-Rated Assemblies: For STC-rated assemblies, provide materials and construction identical to those tested in assembly indicated, according to ASTM E90 and classified according to ASTM E413 by an independent testing agency.

2.02 FRAMING SYSTEMS

A. Framing Members, General: Comply with ASTM C754 for conditions indicated.

1. Steel Sheet Components: Comply with ASTM C645 requirements for metal unless otherwise indicated.
2. Protective Coating: ASTM A653/A653M, G40, hot-dip galvanized unless otherwise indicated.

B. Studs and Runners: ASTM C645. Use either steel studs and runners or dimpled steel studs and runners.

1. Steel Studs and Runners:
   a. Minimum Base-Metal Thickness: refer to Schedule in this section unless otherwise indicated on drawings.
   b. Depth: As indicated on Drawings.

C. Slip-Type Head Joints: Where indicated, provide one of the following:

1. Single Long-Leg Runner System: ASTM C645 top runner with 2-inch-deep flanges in thickness not less than indicated for studs, installed with studs friction fit into top runner and with continuous bridging located within 12 inches of the top of studs to provide lateral bracing.
2. Double-Runner System: ASTM C645 top runners, inside runner with 2-inch-deep flanges in thickness not less than indicated for studs and fastened to studs, and outer runner sized to friction fit inside runner.
3. Deflection Track: Steel sheet top runner manufactured to prevent cracking of finishes applied to interior partition framing resulting from deflection of structure above; in thickness not less than indicated for studs and in width to accommodate depth of studs.
   a. Products: Subject to compliance with requirements, provide one of the following:
      1). Dietrich Metal Framing; SLP-TRK Slotted Deflection Track.
      2). Superior Metal Trim; Superior Flex Track System (SFT).
      3). Telling Industries; Vertical Slip Track.
      4). Substitutions: See section 01 25 00 - Substitution Procedures.

D. Firestop Tracks: Top runner manufactured to allow partition heads to expand and contract with

movement of the structure while maintaining continuity of fire-resistance-rated assembly indicated; in thickness not less than indicated for studs and in width to accommodate depth of studs.

1. Products: Subject to compliance with requirements, provide one of the following:
    a. Fire Trak Corp.; Fire Trak System attached to studs with Fire Trak Posi Klip.
    b. Grace Construction Products; FlameSafe FlowTrak System.
    c. Metal-Lite, Inc.; The System.
    d. Substitute: see Section 01 25 00 - Substitute Procedures.

E. Flat Strap and Backing Plate: Steel sheet for blocking and bracing in length and width indicated.

1. Minimum Base-Metal Thickness: 0.018 inches or as indicated on Drawings.

F. Cold-Rolled Channel Bridging: Steel, 0.053-inch minimum base-metal thickness, with minimum 1/2-inch-wide flanges.

1. Depth: 1-1/2 inches or as indicated on Drawings.
2. Clip Angle: Not less than 1-1/2 by 1-1/2 inches, 0.068-inch-thick, galvanized steel.

G. Hat-Shaped, Rigid Furring Channels: ASTM C645.

1. Minimum Base-Metal Thickness: 0.018 inches or as indicated on Drawings.
2. Depth: As indicated on Drawings.

H. Resilient Furring Channels: 1/2-inch-deep, steel sheet members designed to reduce sound transmission.

1. Configuration: Asymmetrical or hat shaped.

I. Cold-Rolled Furring Channels: 0.053-inch uncoated-steel thickness, with minimum 1/2-inch-wide flanges.

1. Depth: 3/4 inches or as indicated on Drawings.
2. Furring Brackets: Adjustable, corrugated-edge type of steel sheet with minimum uncoated-steel thickness of 0.033 inch.
3. Tie Wire: ASTM A641/A641M, Class 1 zinc coating, soft temper, 0.062-inch-diameter wire, or double strand of 0.048-inch-diameter wire.

J. Z-Shaped Furring: With slotted or nonslotted web, face flange of 1-1/4 inches, wall attachment flange of 7/8 inch, minimum uncoated-metal thickness of 0.018 inch, and depth required to fit insulation thickness indicated.

2.03 SUSPENSION SYSTEMS

A. Tie Wire: ASTM A641/A641M, Class 1 zinc coating, soft temper, 0.062-inch-diameter wire, or double strand of 0.048-inch-diameter wire.

B. Hanger Attachments to Concrete:

1. Anchors: Fabricated from corrosion-resistant materials with holes or loops for attaching wire hangers and capable of sustaining, without failure, a load equal to 5 times that imposed by construction as determined by testing according to ASTM E488 by an independent testing agency.
    a. Type: Cast-in-place anchor, designed for attachment to concrete forms.
2. Powder-Actuated Fasteners: Suitable for application indicated, fabricated from corrosion-resistant materials with clips or other devices for attaching hangers of type indicated, and capable of sustaining, without failure, a load equal to 10 times that imposed by construction as determined by testing according to ASTM E1190 by an independent testing agency.

C. Wire Hangers: ASTM A 641/A 641M, Class 1 zinc coating, soft temper, 0.16 inch in diameter.

D. Carrying Channels: Cold-rolled, commercial-steel sheet with a base-metal thickness of 0.053 inch and minimum 1/2-inch-wide flanges.

1. Depth: As indicated on Drawings.

E. Furring Channels (Furring Members):

1. Cold-Rolled Channels: 0.053-inch uncoated-steel thickness, with minimum 1/2-inch-wide flanges, 3/4 inch deep.
2. Steel Studs and Runners: ASTM C645.
    a. Minimum Base-Metal Thickness: 0.018 inches.
    b. Depth: As indicated on Drawings.
3. Hat-Shaped, Rigid Furring Channels: ASTM C645, 7/8 inch deep.
    a. Minimum Base-Metal Thickness: 0.018 inches.

4. Resilient Furring Channels: 1/2-inch-deep members designed to reduce sound transmission.
    a. Configuration: Asymmetrical or hat shaped.

F. Grid Suspension System for Gypsum Board Ceilings: ASTM C645, direct-hung system composed of main beams and cross-furring members that interlock.

1. Products: Subject to compliance with requirements, provide one of the following:
    a. Armstrong World Industries, Inc.; Drywall Grid Systems.
    b. Chicago Metallic Corporation; Drywall Grid System.
    c. USG Corporation; Drywall Suspension System.
    d. Substitute: see Section 01 25 00 - Substitute Procedures.

2.04 AUXILIARY MATERIALS

A. General: Provide auxiliary materials that comply with referenced installation standards.

1. Fasteners for Metal Framing: Of type, material, size, corrosion resistance, holding power and other properties required to fasten steel members to substrates.

B. Acoustical Joint Sealant: As specifies in Section 07 92 00 - Joint Sealant.

C. Thermal Insulation: As specifies in Section 07 21 00 - Thermal Insulation.

PART 3 - EXECUTION

3.01 EXAMINATION

A. Examine areas and substrates, with Installer present, and including welded hollow-metal frames, cast-in anchors, and structural framing, for compliance with requirements and other conditions affecting performance of the Work.

B. Proceed with installation only after unsatisfactory conditions have been corrected.

3.02 PREPARATION

A. Suspended Assemblies: Coordinate installation of suspension systems with installation of overhead structure to ensure that inserts and other provisions for anchorages to building structure have been installed to receive hangers at spacing required to support the Work and that hangers will develop their full strength.

1. Furnish concrete inserts and other devices indicated to other trades for installation in advance of time needed for coordination and construction.

3.03 INSTALLATION, GENERAL

A. Installation Standard: ASTM C754.

1. Gypsum Board Assemblies: Also comply with requirements in ASTM C840 that apply to framing installation.

B. Install supplementary framing, and blocking to support fixtures, equipment services, heavy trim, grab bars, toilet accessories, furnishings, or similar construction.

C. Install bracing at terminations in assemblies.

D. Do not bridge building control and expansion joints with non-load-bearing steel framing members. Frame both sides of joints independently.

3.04 INSTALLING FRAMED ASSEMBLIES

A. Install framing system components according to spacings indicated, but not greater than spacings required by referenced installation standards for assembly types.

B. Where studs are installed directly against exterior masonry walls or dissimilar metals at exterior walls, install isolation strip between studs and exterior wall.

C. Install studs so flanges within framing system point in same direction.

D. Install tracks (runners) at floors and overhead supports. Extend framing full height to structural supports or substrates above suspended ceilings except where partitions are indicated to terminate at suspended ceilings. Continue framing around ducts penetrating partitions above ceiling.

1. Slip-Type Head Joints: Where framing extends to overhead structural supports, install to produce joints at tops of framing systems that prevent axial loading of finished assemblies.

2. Door Openings: Screw vertical studs at jambs to jamb anchor clips on door frames; install runner track section (for cripple studs) at head and secure to jamb studs.
    a. Install two studs at each jamb unless otherwise indicated.

b. Install cripple studs at head adjacent to each jamb stud, with a minimum 1/2-inch clearance from jamb stud to allow for installation of control joint in finished assembly.

c. Extend jamb studs through suspended ceilings and attach to underside of overhead structure.

3. Other Framed Openings: Frame openings other than door openings the same as required for door openings unless otherwise indicated. Install framing below sills of openings to match framing required above door heads.

4. Fire-Resistance-Rated Partitions: Install framing to comply with fire-resistance-rated assembly indicated and support closures and to make partitions continuous from floor to underside of solid structure.

a. Firestop Track: Where indicated, install to maintain continuity of fire-resistance-rated assembly indicated.

5. Sound-Rated Partitions: Install framing to comply with sound-rated assembly indicated.

6. Curved Partitions:

a. Bend track to uniform curve and locate straight lengths so they are tangent to arcs.

b. Begin and end each arc with a stud, and space intermediate studs equally along arcs. On straight lengths of no fewer than two studs at ends of arcs, place studs 6 inches o.c.

E. Direct Furring:

1. Screw to wood framing.

2. Attach to concrete or masonry with stub nails, screws designed for masonry attachment, or powder-driven fasteners spaced 24 inches o.c.

F. Z-Furring Members:

1. Erect insulation, specified in Section 07 21 00 - Thermal Insulation, vertically and hold in place with Z-furring members spaced 24 inches o.c.

2. Except at exterior corners, securely attach narrow flanges of furring members to wall with concrete stub nails, screws designed for masonry attachment, or powder-driven fasteners spaced 24 inches o.c.

3. At exterior corners, attach wide flange of furring members to wall with short flange extending beyond corner; on adjacent wall surface, screw-attach short flange of furring channel to web of attached channel. At interior corners, space second member no more than 12 inches from corner and cut insulation to fit.

G. Installation Tolerance: Install each framing member so fastening surfaces vary not more than 1/8 inch from the plane formed by faces of adjacent framing.

3.05 INSTALLING SUSPENSION SYSTEMS

A. Install suspension system components according to spacings indicated, but not greater than spacings required by referenced installation standards for assembly types.

B. Isolate suspension systems from building structure where they abut or are penetrated by building structure to prevent transfer of loading imposed by structural movement.

C. Suspend hangers from building structure as follows:

1. Install hangers plumb and free from contact with insulation or other objects within ceiling plenum that are not part of supporting structural or suspension system.

a. Splay hangers only where required to miss obstructions and offset resulting horizontal forces by bracing, countersplaying, or other equally effective means.

2. Where width of ducts and other construction within ceiling plenum produces hanger spacings that interfere with locations of hangers required to support standard suspension system members, install supplemental suspension members and hangers in the form of trapezes or equivalent devices.

a. Size supplemental suspension members and hangers to support ceiling loads within performance limits established by referenced installation standards.

3. Wire Hangers: Secure by looping and wire tying, either directly to structures or to inserts, eye screws, or other devices and fasteners that are secure and appropriate for substrate, and in a manner that will not cause hangers to deteriorate or otherwise fail.

4. Flat Hangers: Secure to structure, including intermediate framing members, by attaching to inserts, eye screws, or other devices and fasteners that are secure and appropriate for structure and hanger, and in a manner that will not cause hangers to deteriorate or otherwise fail.

5. Do not attach hangers to steel roof deck.

6. Do not attach hangers to permanent metal forms. Furnish cast-in-place hanger inserts that extend through forms.

7. Do not attach hangers to rolled-in hanger tabs of composite steel floor deck.

8. Do not connect or suspend steel framing from ducts, pipes, or conduit.

D. Fire-Resistance-Rated Assemblies: Wire tie furring channels to supports.

E. Grid Suspension Systems: Attach perimeter wall track or angle where grid suspension systems meet vertical surfaces. Mechanically join main beam and cross-furring members to each other and butt-cut to fit into wall track.

F. Installation Tolerances: Install suspension systems that are level to within 1/8 inch in 12 feet measured lengthwise on each member that will receive finishes and transversely between parallel members that will receive finishes.

3.06 NON-STRUCTURAL STUD FRAMING SCHEDULE

A. Unless otherwise noted on drawings or elsewhere in these specifications, the following schedules provide for minimum gauge/span based on metal studs at the indicated flange width spaced 16 inches o.c.

1-1/4 inches Flange						
Height	1-5/8”	2-1/2”	3-5/8”	4”	6”	8”
8’-0”	22 ga.	25 ga.	25 ga.	25 ga.	22 ga.	18 ga.
10’-0”		22 ga.	25 ga.	25 ga.	22 ga.	18 ga.
12’-0”		20 ga.	25 ga.	25 ga.	22 ga.	18 ga.
14’-0”			22 ga.	22 ga.	22 ga.	18 ga.
16’-0”			18 ga.	22 ga.	22 ga.	18 ga.
18’-0”			16 ga.	18 ga.	22 ga.	18 ga.
20’-0”				16 ga.	22 ga.	18 ga.
22’-0”					22 ga.	18 ga.
24’-0”					18 ga.	18 ga.
26’-0”					18 ga.	18 ga.
28’-0”					14 ga.	18 ga.
30’-0’						18 ga.
1-5/8 inches Flange						
Height	1-5/8”	2-1/2”	3-5/8”	4”	6”	8”
12’-0”			20 ga.	20 ga.	20 ga.	20 ga.
14’-0”			20 ga.	20 ga.	20 ga.	20 ga.
16’-0”			20 ga.	20 ga.	20 ga.	20 ga.
18’-0”			18 ga.	20 ga.	20 ga.	20 ga.
20’-0”			16 ga.	18 ga.	20 ga.	20 ga.
22’-0”				16 ga.	20 ga.	20 ga.
24’-0”					20 ga.	20 ga.
26’-0”					20 ga.	20 ga.
28’-0”					18 ga.	20 ga.
30’-0’					16 ga.	20 ga.

END OF SECTION

----------THIS PAGE LEFT INTENTIONALLY BLANK----------

PART 1 - GENERAL

1.01 RELATED DOCUMENTS

A. Drawings and general provisions of the Contract, including General and Supplementary Conditions and Division 01 Specification Sections, apply to this Section.

1.02 SUMMARY

A. Section Includes:

1. Interior gypsum board.
2. Texture finishes.

B. Related Requirements:

1. Section 09 22 16 - Non-Structural Metal Framing for non-structural framing and suspension systems that support gypsum board panels.
2. Section 09 30 00 - Tiling for backing panel installed as substrates for tile.

1.03 ACTION SUBMITTALS

A. Product Data: For each type of product.

B. Samples: For the following products:

1. Trim Accessories: Full-size Sample in 12-inch-long length for each trim accessory indicated.
2. Textured Finishes: Manufacturer's standard size for each textured finish indicated and on same backing indicated for Work.

1.04 QUALITY ASSURANCE

A. Mockups: Before beginning gypsum board installation, install mockups of at least 100 sq. ft. in surface area to demonstrate aesthetic effects and set quality standards for materials and execution.

1. Install mockups for the following:
   a. Each level of gypsum board finish indicated for use in exposed locations.
   b. Each texture finish indicated.
2. Apply or install final decoration indicated, including painting and wall coverings, on exposed surfaces for review of mockups.
3. Simulate finished lighting conditions for review of mockups.
4. Subject to compliance with requirements, approved mockups may become part of the completed Work if undisturbed at time of Substantial Completion.

1.05 DELIVERY, STORAGE AND HANDLING

A. Store materials inside under cover and keep them dry and protected against weather, condensation, direct sunlight, construction traffic, and other potential causes of damage. Stack panels flat and supported on risers on a flat platform to prevent sagging.

1.06 FIELD CONDITIONS

A. Environmental Limitations: Comply with ASTM C 840 requirements or gypsum board manufacturer's written recommendations, whichever are more stringent.

B. Do not install paper-faced gypsum panels until installation areas are enclosed and conditioned.

C. Do not install panels that are wet, those that are moisture damaged, and those that are mold damaged.

1. Indications that panels are wet or moisture damaged include, but are not limited to, discoloration, sagging, or irregular shape.
2. Indications that panels are mold damaged include, but are not limited to, fuzzy or splotchy surface contamination and discoloration.

PART 2 - PRODUCTS

2.01 PERFORMANCE REQUIREMENTS

A. Fire-Resistance-Rated Assemblies: For fire-resistance-rated assemblies, provide materials and construction identical to those tested in assembly indicated according to ASTM E119 by an independent testing agency.

B. STC-Rated Assemblies: For STC-rated assemblies, provide materials and construction identical to those tested in assembly indicated according to ASTM E90 and classified according to ASTM E413 by an independent testing agency.

C. Low-Emitting Materials: For ceiling and wall assemblies, provide materials and construction identical to those tested in assembly and complying with the testing and product requirements of the California Department of Health Services' "Standard Practice for the Testing of Volatile Organic Emissions from Various Sources Using Small-Scale Environmental Chambers."

2.02 GYPSUM BOARD, GENERAL

A. Size: Provide maximum lengths and widths available that will minimize joints in each area and that correspond with support system indicated.

2.03 INTERIOR GYPSUM BOARD

A. Manufacturers: Subject to compliance with requirements, provide products by one of the following:

1. Georgia-Pacific Gypsum LLC.
2. National Gypsum Company.
3. USG Corporation.
4. Substitutions: see Section 01 25 00 - Substitution Procedures.

B. Flexible Gypsum Board: ASTM C 1396/C 1396M. Manufactured to bend to fit radii and to be more flexible than standard regular-type gypsum board of same thickness.

1. Thickness: 1/4 inch.
2. Long Edges: Tapered.
3. Mold Resistance: ASTM D3273, score of 10 as rated according to ASTM D3274.

C. Gypsum Ceiling Board: ASTM C1396/C1396M.

1. Thickness: 1/2 inch.
2. Long Edges: Tapered.
3. Mold Resistance: ASTM D3273, score of 10 as rated according to ASTM D3274.

D. Abuse-Resistant Gypsum Board: ASTM C1629/C1629M, Level 3.

1. Core: 5/8 inch, Type X.
2. Long Edges: Tapered.
3. Mold Resistance: ASTM D3273, score of 10 as rated according to ASTM D3274.

E. Moisture-and Mold-Resistant Gypsum Board: ASTM C1396/C1396M. With moisture-and mold-resistant core and paper surfaces.

1. Core: 5/8 inch, regular type or 5/8 inch, Type X.
2. Long Edges: Tapered.
3. Mold Resistance: ASTM D3273, score of 10 as rated according to ASTM D3274.

F. Acoustically Enhanced Gypsum Board: ASTM C1396/C1396M. Multilayer products constructed of two layers of gypsum boards sandwiching a viscoelastic sound-absorbing polymer core.

1. Products: Subject to compliance with requirements, provide one of the following:
    a. National Gypsum Company; Sound Break.
    b. Quiet Solution, Quiet Rock.
    c. Substitutions: see Section 01 25 00 - Substitution Procedures.
2. Core: 5/8 inch.
3. Long Edges: Tapered.

2.04 TILE BACKING PANELS

A. Glass-Mat, Water-Resistant Backing Board: ASTM C1178/C1178M, with manufacturer's standard edges.

1. Products: Subject to compliance with requirements, provide one of the following:
    a. CertainTeed Corp.; GlasRoc Tile Backer.
    b. Georgia-Pacific Gypsum LLC; DensShield Tile Backer.
    c. Substitutions: see section 01 25 00 - Substitution Procedures.
2. Core: 5/8 inch.
3. Mold Resistance: ASTM D3273, score of 10 as rated according to ASTM D3274.

2.05 TRIM ACCESSORIES

A. Interior Trim: ASTM C 1047.

1. Material: Galvanized or aluminum-coated steel sheet, rolled zinc, plastic, or paper-faced galvanized steel sheet.
2. Shapes:
   a. Cornerbead.
   b. Bullnose bead.
   c. LC-Bead: J-shaped; exposed long flange receives joint compound.
   d. L-Bead: L-shaped; exposed long flange receives joint compound.
   e. U-Bead: J-shaped; exposed short flange does not receive joint compound.
   f. Expansion (control) joint.
   g. Curved-Edge Cornerbead: With notched or flexible flanges.

B. Aluminum Trim: Extruded accessories of profiles and dimensions indicated.

1. Manufacturers: Subject to compliance with requirements, provide products by one of the following:
   a. Fry Reglet Corp.
   b. Gordon, Inc.
   c. Pittcon Industries.
   d. Substitutions: see Section 01 25 00 - Substitution Procedures.
2. Aluminum: Alloy and temper with not less than the strength and durability properties of ASTM B221, Alloy 6063-T5.
3. Finish: Corrosion-resistant primer compatible with joint compound and finish materials specified.

2.06 JOINT TREATMENT MATERIALS

A. General: Comply with ASTM C475/C 475M.

B. Joint Tape:

1. Interior Gypsum Board: 10-by-10 self-adhesive glass mesh.
2. Glass-Mat Gypsum Sheathing Board: 10-by-10 self-adhesive glass mesh.
3. Tile Backing Panels: As recommended by panel manufacturer.

C. Joint Compound for Interior Gypsum Board: For each coat use formulation that is compatible with other compounds applied on previous or for successive coats.

1. Prefilling: At open joints, rounded or beveled panel edges, and damaged surface areas, use setting-type taping compound.
2. Embedding and First Coat: For embedding tape and first coat on joints, fasteners, and trim flanges, use setting-type taping compound.
   a. Use setting-type compound for installing paper-faced metal trim accessories.
3. Fill Coat: For second coat, use setting-type, sandable topping compound.
4. Finish Coat: For third coat, use setting-type, sandable topping compound.
5. Skim Coat: For final coat of Level 5 finish, use setting-type, sandable topping compound.

D. Joint Compound for Tile Backing Panels:

1. Glass-Mat, Water-Resistant Backing Panel: As recommended by backing panel manufacturer.
2. Water-Resistant Gypsum Backing Board: Use setting-type taping compound and setting-type, sandable topping compound.

2.07 AUXILIARY MATERIALS

A. General: Provide auxiliary materials that comply with referenced installation standards and manufacturer's written recommendations.

B. Steel Drill Screws: ASTM C 1002, unless otherwise indicated.

1. Use screws complying with ASTM C954 for fastening panels to steel members from 0.033 to 0.112 inch thick.

C. Acoustical Joint Sealant: Manufacturer's standard nonsag, paintable, nonstaining latex sealant complying with ASTM C 834. Product effectively reduces airborne sound transmission through perimeter joints and openings in building construction as demonstrated by testing representative assemblies according to

ASTM E90.

1. Products: Subject to compliance with requirements, provide one of the following:
    a. Accumetric LLC; BOSS 824 Acoustical Sound Sealant.
    b. Specified Technologies, Inc.; Smoke N Sound Acoustical Sealant.
    c. USG Corporation; SHEETROCK Acoustical Sealant.
    d. Substitutions: see Section 01 25 00 - Substitution Procedures.

D. Thermal Insulation: As specified in Section 07 21 00 - Thermal Insulation.

PART 3 - EXECUTION

3.01 EXAMINATION

A. Examine areas and substrates including welded hollow-metal frames and framing, with Installer present, for compliance with requirements and other conditions affecting performance.

B. Examine panels before installation. Reject panels that are wet, moisture damaged, and mold damaged.

C. Proceed with installation only after unsatisfactory conditions have been corrected.

3.02 APPLYING AND FINISHING PANELS, GENERAL

A. Comply with ASTM C840.

B. Install ceiling panels across framing to minimize the number of abutting end joints and to avoid abutting end joints in central area of each ceiling. Stagger abutting end joints of adjacent panels not less than one framing member.

C. Install panels with face side out. Butt panels together for a light contact at edges and ends with not more than 1/16 inch of open space between panels. Do not force into place.

D. Locate edge and end joints over supports, except in ceiling applications where intermediate supports or gypsum board back-blocking is provided behind end joints. Do not place tapered edges against cut edges or ends. Stagger vertical joints on opposite sides of partitions. Do not make joints other than control joints at corners of framed openings.

E. Form control and expansion joints with space between edges of adjoining gypsum panels.

F. Cover both faces of support framing with gypsum panels in concealed spaces (above ceilings, etc.), except in chases braced internally.

1. Unless concealed application is indicated or required for sound, fire, air, or smoke ratings, coverage may be accomplished with scraps of not less than 8 sq. ft. in area.
2. Fit gypsum panels around ducts, pipes, and conduits.
3. Where partitions intersect structural members projecting below underside of floor/roof slabs and decks, cut gypsum panels to fit profile formed by structural members; allow 1/4-to 3/8-inch-wide joints to install sealant.

G. Isolate perimeter of gypsum board applied to non-load-bearing partitions at structural abutments, except floors. Provide 1/4-to 1/2-inch-wide spaces at these locations and trim edges with edge trim where edges of panels are exposed. Seal joints between edges and abutting structural surfaces with acoustical sealant.

H. Attachment to Steel Framing: Attach panels so leading edge or end of each panel is attached to open (unsupported) edges of stud flanges first.

I. STC-Rated Assemblies: Seal construction at perimeters, behind control joints, and at openings and penetrations with a continuous bead of acoustical sealant. Install acoustical sealant at both faces of partitions at perimeters and through penetrations. Comply with ASTM C919 and with manufacturer's written recommendations for locating edge trim and closing off sound-flanking paths around or through assemblies, including sealing partitions above acoustical ceilings.

3.03 APPLYING INTERIOR GYPSUM BOARD

A. Install interior gypsum board in the following locations:

1. Wallboard Type: As indicated on Drawings.
2. Flexible Type: All curved wall or ceiling.
3. Ceiling Type: As indicated on Drawings.
4. Abuse-Resistant Type: Panels facing 10 feet wide corridor within 4 feet from finish floor.
5. Moisture-and Mold-Resistant Type: Panels facing Restrooms and Janitor Rooms.
6. Type C: At fire rated wall assembly.

7. Glass-Mat Interior Type: Panels facing Kitchen 162, Wash 164.

8. Acoustically Enhanced Type: Panels facing Music room 251.

B. Single-Layer Application:

1. On ceilings, apply gypsum panels before wall/partition board application to greatest extent possible and at right angles to framing unless otherwise indicated.

2. On partitions/walls, apply gypsum panels vertically (parallel to framing) unless otherwise indicated or required by fire-resistance-rated assembly, and minimize end joints.

a. Stagger abutting end joints not less than one framing member in alternate courses of panels.

b. At stairwells and other high walls, install panels horizontally unless otherwise indicated or required by fire-resistance-rated assembly.

3. On Z-furring members, apply gypsum panels vertically (parallel to framing) with no end joints. Locate edge joints over furring members.

4. Fastening Methods: Apply gypsum panels to supports with steel drill screws.

C. Multilayer Application:

1. On ceilings, apply gypsum board indicated for base layers before applying base layers on walls/partitions; apply face layers in same sequence. Apply base layers at right angles to framing members and offset face-layer joints one framing member, 16 inches minimum, from parallel base-layer joints, unless otherwise indicated or required by fire-resistance-rated assembly.

2. On partitions/walls, apply gypsum board indicated for base layers and face layers vertically (parallel to framing) with joints of base layers located over stud or furring member and face-layer joints offset at least one stud or furring member with base-layer joints, unless otherwise indicated or required by fire-resistance-rated assembly. Stagger joints on opposite sides of partitions.

3. On Z-furring members, apply base layer vertically (parallel to framing) and face layer either vertically (parallel to framing) or horizontally (perpendicular to framing) with vertical joints offset at least one furring member. Locate edge joints of base layer over furring members.

4. Fastening Methods: Fasten base layers and face layers separately to supports with screws.

D. Laminating to Substrate: Where gypsum panels are indicated as directly adhered to a substrate (other than studs, joists, furring members, or base layer of gypsum board), comply with gypsum board manufacturer's written recommendations and temporarily brace or fasten gypsum panels until fastening adhesive has set.

E. Curved Surfaces:

1. Install panels horizontally (perpendicular to supports) and unbroken, to extent possible, across curved surface plus 12-inch-long straight sections at ends of curves and tangent to them.

2. For double-layer construction, fasten base layer to studs with screws 16 inches o.c. Center gypsum board face layer over joints in base layer, and fasten to studs with screws spaced 12 inches o.c.

3.04 APPLYING TILE BACKING PANELS

A. Glass-Mat, Water-Resistant Backing Panels: Comply with manufacturer's written installation instructions and install at locations indicated to receive tile. Install with 1/4-inch gap where panels abut other construction or penetrations.

B. Water-Resistant Backing Board: Install where indicated with 1/4-inch gap where panels abut other construction or penetrations.

C. Where tile backing panels abut other types of panels in same plane, shim surfaces to produce a uniform plane across panel surfaces.

3.05 INSTALLING TRIM ACCESSORIES

A. General: For trim with back flanges intended for fasteners, attach to framing with same fasteners used for panels. Otherwise, attach trim according to manufacturer's written instructions.

B. Control Joints: Install control joints at locations indicated on Drawings.

C. Interior Trim: Install in the following locations:

1. Cornerbead: Use at outside corners unless otherwise indicated.

2. Bullnose Bead: Use at outside corners where indicated.

3. LC-Bead: Use at exposed panel edges.

4. L-Bead: Use where indicated.

5. U-Bead: Use at exposed panel edges.

6. Curved-Edge Cornerbead: Use at curved openings.

D. Aluminum Trim: Install in locations indicated on Drawings.

3.06 FINISHING GYPSUM BOARD

A. General: Treat gypsum board joints, interior angles, edge trim, control joints, penetrations, fastener heads, surface defects, and elsewhere as required to prepare gypsum board surfaces for decoration. Promptly remove residual joint compound from adjacent surfaces.

B. Prefill open joints, rounded or beveled edges, and damaged surface areas.

C. Apply joint tape over gypsum board joints, except for trim products specifically indicated as not intended to receive tape.

D. Gypsum Board Finish Levels: Finish panels to levels indicated below and according to ASTM C840:

1. Level 1: Ceiling plenum areas, concealed areas, and where indicated.

2. Level 2: Panels that are substrate for tile or where indicated on Drawings.

3. Level 4: At panel surfaces that will be exposed to view unless otherwise indicated.

a. Primer and its application to surfaces are specified in other Section 09 91 00 - Painting.

4. Level 5: Where panels receive gloss, semi-gloss, enamel or non-textured flat paints, and other surfaces subject to severe lighting. It is considered a high-quality gypsum board finish.

a. Primer and its application to surfaces are specified in other Section 09 91 00 - Painting.

E. Glass-Mat Faced Panels: Finish according to manufacturer's written instructions.

3.07 PROTECTION

A. Protect adjacent surfaces from drywall compound and promptly remove from floors and other non-drywall surfaces. Repair surfaces stained, marred, or otherwise damaged during drywall application.

B. Protect installed products from damage from weather, condensation, direct sunlight, construction, and other causes during remainder of the construction period.

C. Remove and replace panels that are wet, moisture damaged, and mold damaged.

1. Indications that panels are wet or moisture damaged include, but are not limited to, discoloration, sagging, or irregular shape.

2. Indications that panels are mold damaged include, but are not limited to, fuzzy or splotchy surface contamination and discoloration

END OF SECTION

PART 1 - GENERAL

1.01 RELATED DOCUMENTS

A. Drawings and general provisions of the Contract, including General and Supplementary Conditions and Division 01 Specification Sections, apply to this Section.

1.02 SUMMARY

A. Section Includes:

1. Porcelain tile.
2. Crack isolation membrane.

B. Related Sections:

1. Section 07 92 00 - Joint Sealants for sealing of expansion, contraction, control, and isolation joints in tile surfaces.

1.03 DEFINITIONS

A. General: Definitions in the ANSI A108 series of tile installation standards and in ANSI A137.1 apply to Work of this Section unless otherwise specified.

B. ANSI A108 Series: ANSI A108.01, ANSI A108.02, ANSI A108.1A, ANSI A108.1B, ANSI A108.1C, ANSI A108.4, ANSI A108.5, ANSI A108.6, ANSI A108.8, ANSI A108.9, ANSI A108.10, ANSI A108.11, ANSI A108.12, ANSI A108.13, ANSI A108.14, ANSI A108.15, ANSI A108.16, and ANSI A108.17, which are contained in "American National Standard Specifications for Installation of Ceramic Tile".

C. Module Size: Actual tile size plus joint width indicated.

D. Face Size: Actual tile size, excluding spacer lugs.

1.04 PERFORMANCE REQUIREMENTS

A. Static Coefficient of Friction: For tile installed on walkway surfaces, provide products with the following values as determined by testing identical products per ASTM C1028:

1. Level Surfaces: Minimum 0.5.
2. Step Treads: Minimum 0.5.
3. Ramp Surfaces: Minimum 0.8.

1.05 ACTION SUBMITTALS

A. Product Data: For each type of product indicated.

B. Shop Drawings: Show locations of each type of tile and tile pattern. Show widths, details, and locations of expansion, contraction, control, and isolation joints in tile substrates and finished tile surfaces.

C. Samples for Initial Selection: For each type of tile and grout indicated. Include Samples of accessories involving color selection.

D. Samples for Verification:

1. Full-size units of each type and composition of tile and for each color and finish required.
2. Full-size units of each type of trim and accessory for each color and finish required.

1.06 INFORMATIONAL SUBMITTALS

A. Qualification Data: For qualified Installer.

B. Master Grade Certificates: For each shipment, type, and composition of tile, signed by tile manufacturer and Installer.

C. Product Certificates: For each type of product, signed by product manufacturer.

D. Material Test Reports: For each tile-setting and -grouting product and special purpose tile.

1.07 MAINTENANCE MATERIAL SUBMITTALS

A. Furnish extra materials that match and are from same production runs as products installed and that are packaged with protective covering for storage and identified with labels describing contents.

1. Tile and Trim Units: Furnish quantity of full-size units equal to 3 percent of amount installed for each type, composition, color, pattern, and size indicated.
2. Grout: Furnish quantity of grout equal to 3 percent of amount installed for each type, composition, and color indicated.

1.08 QUALITY ASSURANCE

A. Source Limitations for Tile: Obtain tile of each type and color or finish from one source or producer.

1. Obtain tile of each type and color or finish from same production run and of consistent quality in appearance and physical properties for each contiguous area.

B. Source Limitations for Setting and Grouting Materials: Obtain ingredients of a uniform quality for each mortar, adhesive, and grout component from one manufacturer and each aggregate from one source or producer.

C. Source Limitations for Other Products: Obtain each of the following products specified in this Section from a single manufacturer for each product:

1. Crack isolation membrane.

2. Metal edge strips.

D. Mockups: Build mockups to verify selections made under sample submittals and to demonstrate aesthetic effects and set quality standards for materials and execution.

1. Build mockup of each type of floor tile installation.

2. Build mockup of each type of wall tile installation.

3. Approved mockups may become part of the completed Work if undisturbed at time of Substantial Completion.

E. Preinstallation Conference: Conduct conference at Project site.

1. Review requirements in ANSI A108.01 for substrates and for preparation by other trades.

1.09 DELIVERY, STORAGE, AND HANDLING

A. Deliver and store packaged materials in original containers with seals unbroken and labels intact until time of use. Comply with requirements in ANSI A137.1 for labeling tile packages.

B. Store tile and cementitious materials on elevated platforms, under cover, and in a dry location.

C. Store aggregates where grading and other required characteristics can be maintained and contamination can be avoided.

D. Store liquid materials in unopened containers and protected from freezing.

E. Handle tile that has temporary protective coating on exposed surfaces to prevent coated surfaces from contacting backs or edges of other units. If coating does contact bonding surfaces of tile, remove coating from bonding surfaces before setting tile.

1.10 PROJECT CONDITIONS

A. Environmental Limitations: Do not install tile until construction in spaces is complete and ambient temperature and humidity conditions are maintained at the levels indicated in referenced standards and manufacturer's written instructions.

PART 2 - PRODUCTS

2.01 PRODUCTS, GENERAL

A. ANSI Ceramic Tile Standard: Provide tile that complies with ANSI A137.1 for types, compositions, and other characteristics indicated.

1. Provide tile complying with Standard grade requirements unless otherwise indicated.

B. ANSI Standards for Tile Installation Materials: Provide materials complying with ANSI A108.02, ANSI standards referenced in other Part 2 articles, ANSI standards referenced by TCA installation methods specified in tile installation schedules, and other requirements specified.

C. Factory Blending: For tile exhibiting color variations within ranges, blend tile in factory and package so tile units taken from one package show same range in colors as those taken from other packages and match approved Samples.

D. Mounting: For factory-mounted tile, provide back-or edge-mounted tile assemblies as standard with manufacturer unless otherwise indicated.

1. Where tile is indicated for installation on exteriors or in wet areas, do not use back-or edge-mounted tile assemblies unless tile manufacturer specifies in writing that this type of mounting is suitable for installation indicated and has a record of successful in-service performance.

E. Factory-Applied Temporary Protective Coating: Where indicated under tile type, protect exposed surfaces of tile against adherence of mortar and grout by precoating with continuous film of petroleum paraffin wax, applied hot. Do not coat unexposed tile surfaces.

2.02 TILE PRODUCTS

A. Tile: Refer to drawings for type, size, and color and pattern, etc.

1. Grout Color: As indicated, otherwise selected by Architect from manufacturer's full range.

2. Trim Units: Coordinated with sizes and coursing of adjoining flat tile where applicable and matching characteristics of adjoining flat tile. Provide trim units as selected from manufacturer's standard shapes.

2.03 THRESHOLDS

A. General: Fabricate to sizes and profiles indicated or required to provide transition between adjacent floor finishes.

1. Bevel edges at 1:2 slope, with lower edge of bevel aligned with or up to 1/16 inch above adjacent floor surface. Finish bevel to match top surface of threshold. Limit height of threshold to 1/2 inch or less above adjacent floor surface.

2. Description: Provide stainless steel floor transition profiles by Schluter-System;

http://www.schluter.com/137.aspx

2.04 WATERPROOF MEMBRANE

A. General: Manufacturer's standard product, selected from the following, that complies with ANSI A118.10 and is recommended by the manufacturer for the application indicated. Include reinforcement and accessories recommended by manufacturer.

B. Latex-Portland Cement: Flexible mortar consisting of cement-based mix and latex additive.

1. Products: Subject to compliance with requirements, provide one of the following:

a. Boiardi Products; a QEP company; Elastiment 323 Cement Based Waterproofing, Anti-Fracture/Crack Suppression Membrane.

b. C-Cure; UltraCure 971.

c. MAPEI Corporation; Mapelastic 315.

d. Substitutions: see section 01 25 00 - Substitution Procedures.

2.05 CRACK ISOLATION MEMBRANE

A. General: Manufacturer's standard product that complies with ANSI A118.12 for standard performance and is recommended by the manufacturer for the application indicated. Include reinforcement and accessories recommended by manufacturer.

B. Chlorinated Polyethylene Sheet: Nonplasticized, chlorinated polyethylene faced on both sides with nonwoven polyester fabric; 0.030-inch nominal thickness.

1. Products: Subject to compliance with requirements, provide the following:

a. Noble Company (The); Nobleseal CIS.

b. Substitutions: see section 01 25 00 - Substitution Procedures.

2.06 SETTING MATERIALS

A. Latex-Portland Cement Mortar (Thin Set): ANSI A118.4.

1. Manufacturers: Subject to compliance with requirements, provide products by one of the following:

a. Bostik, Inc.

b. Laticrete International, Inc.

c. MAPEI Corporation.

d. Substitutions: see section 01 25 00 - Substitution Procedures.

2. Provide prepackaged, dry-mortar mix containing dry, redispersible, vinyl acetate or acrylic additive to which only water must be added at Project site.

3. For wall applications, provide mortar that complies with requirements for nonsagging mortar in addition to the other requirements in ANSI A118.4.

2.07 GROUT MATERIALS

A. Sand-Portland Cement Grout: ANSI A108.10, composed of white or gray cement and white or colored aggregate as required to produce color indicated.

B. Standard Cement Grout: ANSI A118.6.

1. Manufacturers: Subject to compliance with requirements, provide products by one of the following:

a. Boiardi Products; a QEP company.
b. Bonsal American; an Oldcastle company.
c. Bostik, Inc.
d. C-Cure.
e. Custom Building Products.
f. Jamo Inc.
g. Laticrete International, Inc.
h. MAPEI Corporation.
i. Southern Grouts & Mortars, Inc.
j. Summitville Tiles, Inc.
k. TEC; a subsidiary of H. B. Fuller Company.
l. Substitutions: see section 01 25 00 - Substitution Procedures.

C. Polymer-Modified Tile Grout: ANSI A118.7.

1. Manufacturers: Subject to compliance with requirements, provide products by one of the following:
   a. Boiardi Products; a QEP company.
   b. Bonsal American; an Oldcastle company.
   c. Bostik, Inc.
   d. C-Cure.
   e. Custom Building Products.
   f. Jamo Inc.
   g. Laticrete International, Inc.
   h. MAPEI Corporation.
   i. Southern Grouts & Mortars, Inc.
   j. Summitville Tiles, Inc.
   k. TEC; a subsidiary of H. B. Fuller Company.
   l. Substitutions: see section 01 25 00 - Substitution Procedures.
2. Polymer Type: Dry, redispersible form, prepackaged with other dry ingredients.
3. Sand Additive: unsanded grout mixture for joints 1/8 inch and narrower. Sanded grout mixture for joints wider than 1/8 inch.

D. Water-Cleanable Epoxy Grout: ANSI A118.3, with a VOC content of 65 g/L or less when calculated according to 40 CFR 59, Subpart D.

1. Manufacturers: Subject to compliance with requirements, provide products by one of the following:
   a. Atlas Minerals & Chemicals, Inc.
   b. Boiardi Products; a QEP company.
   c. Bonsal American; an Oldcastle company.
   d. Bostik, Inc.
   e. C-Cure.
   f. Custom Building Products.
   g. Jamo Inc.
   h. Laticrete International, Inc.
   i. MAPEI Corporation.
   j. Mer-Kote Products, Inc.
   k. Southern Grouts & Mortars, Inc.
   l. Summitville Tiles, Inc.
   m. TEC; a subsidiary of H. B. Fuller Company.
   n. Substitutions: see section 01 25 00 - Substitution Procedures.
2. Provide product capable of withstanding continuous and intermittent exposure to temperatures

of up to 140°F (60°C) and 212°F (100°C), respectively, and certified by manufacturer for intended use.

E. Chemical-Resistant Furan Grout: ANSI A118.5, with carbon filler, with a VOC content of 65 g/L or less when calculated according to 40 CFR 59, Subpart D.

1. Manufacturers: Subject to compliance with requirements, provide products by one of the following:

a. Atlas Minerals & Chemicals, Inc.

b. Substitutions: see section 01 25 00 - Substitution Procedures.

2.08 MISCELLANEOUS MATERIALS

A. Trowelable Underlayments and Patching Compounds: Latex-modified, portland cement-based formulation provided or approved by manufacturer of tile-setting materials for installations indicated.

B. Temporary Protective Coating: Product indicated below that is formulated to protect exposed surfaces of tile against adherence of mortar and grout; compatible with tile, mortar, and grout products; and easily removable after grouting is completed without damaging grout or tile.

1. Petroleum paraffin wax, fully refined and odorless, containing at least 0.5 percent oil with a melting point of 120° to 140°F per ASTM D 87.

2. Grout release in form of manufacturer's standard proprietary liquid coating that is specially formulated and recommended for use as temporary protective coating for tile.

D. Tile Cleaner: A neutral cleaner capable of removing soil and residue without harming tile and grout surfaces, specifically approved for materials and installations indicated by tile and grout manufacturers.

E. Grout Sealer: Manufacturer's standard silicone product for sealing grout joints and that does not change color or appearance of grout.

1. Products: Subject to compliance with requirements, provide product from one of the following:

a. Homex.

b. Tile Guard.

c. Substitutions: see section 01 25 00 - Substitution Procedures.

2.09 MIXING MORTARS AND GROUT

A. Mix mortars and grouts to comply with referenced standards and mortar and grout manufacturers' written instructions.

B. Add materials, water, and additives in accurate proportions.

C. Obtain and use type of mixing equipment, mixer speeds, mixing containers, mixing time, and other procedures to produce mortars and grouts of uniform quality with optimum performance characteristics for installations indicated.

PART 3 - EXECUTION

3.01 EXAMINATION

A. Examine substrates, areas, and conditions where tile will be installed, with Installer present, for compliance with requirements for installation tolerances and other conditions affecting performance of installed tile.

1. Verify that substrates for setting tile are firm, dry, clean, free of coatings that are incompatible with tile-setting materials including curing compounds and other substances that contain soap, wax, oil, or silicone; and comply with flatness tolerances required by ANSI A108.01 for installations indicated.

2. Verify that concrete substrates for tile floors installed with adhesives bonded mortar bed or thin-set mortar comply with surface finish requirements in ANSI A108.01 for installations indicated.

a. Verify that surfaces that received a steel trowel finish have been mechanically scarified.

b. Verify that protrusions, bumps, and ridges have been removed by sanding or grinding.

3. Verify that installation of grounds, anchors, recessed frames, electrical and mechanical units of work, and similar items located in or behind tile has been completed.

4. Verify that joints and cracks in tile substrates are coordinated with tile joint locations; if not coordinated, adjust joint locations in consultation with Architect.

B. Proceed with installation only after unsatisfactory conditions have been corrected.

3.02 PREPARATION

A. Fill cracks, holes, and depressions in concrete substrates for tile floors installed with adhesives or thin-set mortar with trowelable leveling and patching compound specifically recommended by tile-setting material manufacturer.

B. Where indicated, prepare substrates to receive waterproofing by applying a reinforced mortar bed that complies with ANSI A108.1A and is sloped 1/8 inch per foot toward drains.

C. Blending: For tile exhibiting color variations, verify that tile has been factory blended and packaged so tile units taken from one package show same range of colors as those taken from other packages and match approved Samples. If not factory blended, either return to manufacturer or blend tiles at Project site before installing.

D. Field-Applied Temporary Protective Coating: If indicated under tile type or needed to prevent grout from staining or adhering to exposed tile surfaces, precoat them with continuous film of temporary protective coating, taking care not to coat unexposed tile surfaces.

3.03 TILE INSTALLATION

A. Comply with TCA's "Handbook for Ceramic Tile Installation" for TCA installation methods specified in tile installation schedules. Comply with parts of the ANSI A108 Series "Specifications for Installation of Ceramic Tile" that are referenced in TCA installation methods, specified in tile installation schedules, and apply to types of setting and grouting materials used.

1. For the following installations, follow procedures in the ANSI A108 Series of tile installation standards for providing 95 percent mortar coverage:

a. Exterior tile floors.

b. Tile floors in wet areas.

c. Tile swimming pool decks.

d. Tile floors in laundries.

e. Tile floors composed of tiles 8 by 8 inches or larger.

f. Tile floors composed of rib-backed tiles.

B. Extend tile work into recesses and under or behind equipment and fixtures to form complete covering without interruptions unless otherwise indicated. Terminate work neatly at obstructions, edges, and corners without disrupting pattern or joint alignments.

C. Accurately form intersections and returns. Perform cutting and drilling of tile without marring visible surfaces. Carefully grind cut edges of tile abutting trim, finish, or built-in items for straight aligned joints. Fit tile closely to electrical outlets, piping, fixtures, and other penetrations so plates, collars, or covers overlap tile.

D. Provide manufacturer's standard trim shapes where necessary to eliminate exposed tile edges.

E. Jointing Pattern: Lay tile in grid pattern unless otherwise indicated. Lay out tile work and center tile fields in both directions in each space or on each wall area. Lay out tile work to minimize the use of pieces that are less than half of a tile. Provide uniform joint widths unless otherwise indicated.

1. For tile mounted in sheets, make joints between tile sheets same width as joints within tile sheets so joints between sheets are not apparent in finished work.

2. Where adjoining tiles on floor, base, walls, or trim are specified or indicated to be same size, align joints.

3. Where tiles are specified or indicated to be whole integer multiples of adjoining tiles on floor, base, walls, or trim, align joints unless otherwise indicated.

F. Joint Widths: Unless otherwise indicated, install tile with the following joint widths:

1. Wall and Floor Tile: 1/16 inch.

G. Lay out tile wainscots to dimensions indicated or to next full tile beyond dimensions indicated.

H. Expansion Joints: Provide expansion joints and other sealant-filled joints, including control, contraction, and isolation joints, where indicated. Form joints during installation of setting materials, mortar beds, and tile. Do not saw-cut joints after installing tiles.

1. Where joints occur in concrete substrates, locate joints in tile surfaces directly above them.

I. Metal Edge Strips: Install where exposed edge of tile flooring meets carpet, wood, or other flooring that finishes flush with or below top of tile and no threshold is indicated.

J. Grout Sealer: Apply grout sealer to cementitious grout joints according to grout-sealer manufacturer's written instructions. As soon as grout sealer has penetrated grout joints, remove excess sealer and sealer from tile faces by wiping with soft cloth.

3.04 TILE BACKING PANEL INSTALLATION

A. Use latex-portland cement mortar for bonding material unless otherwise directed in manufacturer's written instructions.

3.05 WATERPROOFING INSTALLATION

A. Install waterproofing to comply with ANSI A108.13 and manufacturer's written instructions to produce waterproof membrane of uniform thickness and bonded securely to substrate.

B. Do not install tile or setting materials over waterproofing until waterproofing has cured and been tested to determine that it is watertight.

3.06 CRACK ISOLATION MEMBRANE INSTALLATION

A. Install crack isolation membrane to comply with ANSI A108.17 and manufacturer's written instructions to produce membrane of uniform thickness and bonded securely to substrate.

B. Do not install tile or setting materials over crack isolation membrane until membrane has cured.

3.07 CLEANING AND PROTECTING

A. Cleaning: On completion of placement and grouting, clean all ceramic tile surfaces so they are free of foreign matter.

1. Remove epoxy and latex-portland cement grout residue from tile as soon as possible.

2. Clean grout smears and haze from tile according to tile and grout manufacturer's written instructions but no sooner than 10 days after installation. Use only cleaners recommended by tile and grout manufacturers and only after determining that cleaners are safe to use by testing on samples of tile and other surfaces to be cleaned. Protect metal surfaces and plumbing fixtures from effects of cleaning. Flush surfaces with clean water before and after cleaning.

3. Remove temporary protective coating by method recommended by coating manufacturer and that is acceptable to tile and grout manufacturer. Trap and remove coating to prevent drain clogging.

B. Protect installed tile work with kraft paper or other heavy covering during construction period to prevent staining, damage, and wear. If recommended by tile manufacturer, apply coat of neutral protective cleaner to completed tile walls and floors.

C. Prohibit foot and wheel traffic from tiled floors for at least seven days after grouting is completed.

D. Before final inspection, remove protective coverings and rinse neutral protective cleaner from tile surfaces.

3.08 INTERIOR TILE INSTALLATION SCHEDULE

A. Exterior Floor Installations:

1. Tile Installation: Thin set mortar over waterproofing membrane on concrete; TCA F102.

a. Thin-Set Mortar: Latex-portland cement mortar.

b. Grout: Polymer-modified sanded grout.

B. Exterior Wall Installation, Masonry or Concrete:

1. Tile Installation: Thin-set mortar; TCA W202.

a. Thin-Set Mortar: Latex-portland cement mortar.

b. Grout: Polymer-modified sanded grout.

C. Interior Floor Installations, Concrete Subfloor:

1. Tile Installation: Thin-set mortar on crack isolation membrane; TCA F125A.

a. Thin-Set Mortar: Latex-portland cement mortar.

b. Grout: Polymer-modified sanded grout for paver tile.

c. Grout: Water-Cleanable Epoxy Grout for quarry tile.

D. Interior Floor Installations, Wood Subfloor:

1. Tile Installation: Thin-set mortar on cementitious backer units or fiber cement underlayment; TCA F144.

a. Thin-Set Mortar: Latex-portland cement mortar.

b. Grout: Polymer-modified sanded grout.

E. Interior Wall Installations, Masonry or Concrete:

1. Tile Installation: Thin-set mortar; TCA W202.

a. Thin-Set Mortar: Latex-portland cement mortar.

b. Grout: Polymer-modified sanded grout.

F. Interior Wall Installations, Wood /Metal Studs or Furring:

1. Tile Installation: Thin-set mortar on gypsum board; TCA W243.

a. Thin-Set Mortar: Latex-portland cement mortar.

b. Grout: Polymer-modified sanded grout.

G. Bathtub/Shower Wall Installations, Wood /Metal Studs or Furring:

1. Tile Installation B419: Thin-set mortar on coated glass-mat, water-resistant backer board; TCA B419.

a. Thin-Set Mortar: Latex-portland cement mortar.

b. Grout: Water-cleanable epoxy grout.

H. Shower Receptor and Wall Installations, Concrete or Masonry:

1. Tile Installation: Thin-set mortar on waterproof membrane; TCA B421.

a. Thin-Set Mortar: Latex-portland cement mortar.

b. Grout: Polymer-modified sanded grout.

I. Shower Receptor and Wall Installations, Wood /Metal Studs or Furring:

1. Tile Installation: Thin-set mortar on waterproof membrane over cementitious backer units or fiber cement underlayment; TCA B421.

a. Thin-Set Mortar: Latex-portland cement mortar.

b. Grout: Polymer-modified sanded grout.

END OF SECTION

PART 1 - GENERAL

1.01 RELATED DOCUMENTS

A. Drawings and general provisions of the Contract, including General and Supplementary Conditions and Division 01 Specification Sections, apply to this Section.

1.02 SUMMARY

A. Section Includes:

1. Acoustical ceiling panels.
2. Exposed grid suspension system.
3. Wire hangers, fasteners, main runners, cross tees, and wall angle moldings.

B. Related Sections:

1. Section 09 29 00 - Gypsum Board
2. Section 09 22 16 - Non-Structural Metal Framing
3. Division 23 Sections - Mechanical Work
4. Division 26 Sections - Electrical Work

C. Alternates

1. Prior Approval: Unless otherwise provided for in the Contract documents, proposed product substitutions may be submitted no later than FIVE (5) working days prior to the date established for receipt of bids. Acceptability of a proposed substitution is contingent upon the Architect's review of the proposal for acceptability and approved products will be set forth by the Addenda. If included in a Bid are substitute products which have not been approved by Addenda, the specified products shall be provided without additional compensation.
2. Submittals which do not provide adequate data for the product evaluation will not be considered. The proposed substitution must meet all requirements of this section, including but not necessarily limited to, the following: Single source materials suppliers (if specified in Section 1.5); Underwriters' Laboratories Classified Acoustical performance; Panel design, size, composition, color, and finish; Suspension system component profiles and sizes; Compliance with the referenced standards.

1.03 REFERENCE STANDARDS

(Current Edition at Date of Bid)

A. ASTM A 1008 Standard Specification for Steel, Sheet, Cold Rolled, Carbon, Structural, High-Strength Low-Alloy and High-Strength Low-Alloy with Improved Formability.

B. ASTM A 641 Standard Specification for Zinc-Coated (Galvanized) Carbon Steel Wire.

C. ASTM A 653 Standard Specification for Steel Sheet, Zinc-Coated (Galvanized) by the Hot-Dip Process.

D. ASTM C 423 Sound Absorption and Sound Absorption Coefficients by the Reverberation Room Method.

E. ASTM C 635 Standard Specification for Metal Suspension Systems for Acoustical Tile and Lay-in Panel Ceilings.

F. ASTM C 636 Recommended Practice for Installation of Metal Ceiling Suspension Systems for Acoustical Tile and Lay-in Panels.

G. ASTM E 84 Standard Test Method for Surface Burning Characteristics of Building Materials.

H. ASTM E580/E580M Standard Practice for Installation of Ceiling Suspension Systems for Acoustical Tile and Lay-in Panels in Areas Subject to Earthquake Ground Motions.

I. ASTM E 1414 Standard Test Method for Airborne Sound Attenuation Between Rooms Sharing a Common Ceiling Plenum.

J. ASTM E 1111 Standard Test Method for Measuring the Interzone Attenuation of Ceilings Systems.

K. ASTM E 1264 Classification for Acoustical Ceiling Products.

L. ASTM E 1477 Standard Test Method for Luminous Reflectance Factor of Acoustical Materials by Use of Integrating-Sphere Reflectometers.

M. ASTM D 3273 Standard Test Method for Resistance to Growth of Mold on the Surface of Interior Coatings in an Environmental Chamber.

N. ASTM E 119 Standard Test Methods for Fire Tests of Building Construction and Material.

1.04 ADMINISTRATIVE REQUIREMENTS

A. Sequence work to ensure acoustical ceilings are not installed until building is enclosed, sufficient heat is provided, dust generating activities have terminated, and overhead work is completed, tested, and approved.

B. Do not install acoustical units until after interior wet work is dry.

1.05 SUBMITTALS

A. Product Data: Submit manufacturer's technical data for each type of acoustical ceiling unit and suspension system required.

B. Samples: Minimum 6 inch x 6 inch samples of specified acoustical panel; 8 inch long samples of exposed wall molding and suspension system, including main runner and 4 foot cross tees.

C. Shop Drawings: Layout and details of acoustical ceilings. Show locations of items which are to be coordinated with, or supported by the ceilings.

D. Certifications: Manufacturer's certifications that products comply with specified requirements, including laboratory reports showing compliance with specified tests and standards. For acoustical performance, each carton of material must carry an approved independent laboratory classification of NRC, CAC, and AC.

E. If the material supplied by the acoustical subcontractor does not have an Underwriter's Laboratory classification of acoustical performance on every carton, subcontractor shall be required to send material from every production run appearing on the job to an independent or NVLAP approved laboratory for testing, at the architect's or owner's discretion. All products not conforming to manufacturer's current published values must be removed, disposed of and replaced with complying product at the expense of the Contractor performing the work.

1.06 QUALITY ASSURANCE

A. Single-Source Responsibility: Provide acoustical panel units and grid components by a single manufacturer

B. Fire-Test-Response Characteristics:

1. Fire-Resistance Characteristics: Where indicated, provide acoustical panel ceilings identical to those of assemblies tested for fire resistance per ASTM E 119 by UL or another testing and inspecting agency acceptable to authorities having jurisdiction.

C. Installer Qualifications: Engage an experienced installer who has completed acoustical panel ceilings similar in material, design, and extent to that indicated for this Project and with a record of successful in-service performance.

D. Acoustical Unit Manufacturer Qualifications: Company specializing in manufacturing the products specified in this section with minimum five years documented experience.

E. Coordination of Work: Coordinate acoustical ceiling work with installers of related work including, but not limited to building insulation, gypsum board, light fixtures, mechanical systems, electrical systems, and sprinklers

1.07 DELIVERY, STORAGE, AND HANDLING

A. Deliver acoustical ceiling units to project site in original, unopened packages and store them in a fully enclosed space where they will be protected against damage from moisture, direct sunlight, surface contamination, and other causes.

B. Before installing acoustical ceiling units, permit them to reach room temperature and a stabilized moisture content.

C. Handle acoustical ceiling units carefully to avoid chipping edges or damaged units in any way.

1.08 PROJECT CONDITIONS

A. Space Enclosure:

1. Standard Ceilings: Do not install interior ceilings until space is enclosed and weatherproof; wet work in place is completed and nominally dry; work above ceilings is complete; and ambient conditions of temperature and humidity are continuously maintained at values near those intended for final occupancy. Building areas to receive ceilings shall be free of construction dust and debris.

2. HumiGuard Plus Ceilings: Building areas to receive ceilings shall be free of construction dust and debris. Products with HumiGuard Plus performance and hot dipped galvanized steel, aluminum or stainless steel suspension systems can be installed up to 120°F (49°C) and in spaces before the building is enclosed, where HVAC systems are cycled or not operating. Cannot be used in exterior applications where standing water is present or where moisture will come in direct contact with

the ceiling.

3. HumiGuard Max Ceilings: Building areas to receive ceilings shall be free of construction dust and debris. Ceilings with HumiGuard Max performance can be installed in conditions up to 120°F (49°C) and maximum humidity exposure including outdoor applications, and other standing water applications, so long as they are installed with either SS Prelude Plus, AL Prelude Plus, or Prelude Plus XL Fire Guard suspension systems. Products with HumiGuard Max performance can be installed in exterior applications, where standing water is present, or where moisture will come in direct contact with the ceiling. Only Ceramaguard with AL Prelude Plus suspension system can be installed over swimming pools.

1.09 WARRANTY

A. Acoustical Panel: Submit a written warranty executed by the manufacturer, agreeing to repair or replace acoustical panels that fail within the warranty period. Failures include, but are not limited to:

1. Acoustical Panels: Sagging and warping
2. Grid System: Rusting and manufacturer's defects

B. Warranty Period Standard:

1. Acoustical panels: One (1) year from date of substantial completion.
2. Cirrus Acoustical panels: Ten (10) year from date of substantial completion.Note Space Enclosure requirements
3. Grid: Ten years from date of substantial completion.

C. Warranty Period HumiGuard:

1. Acoustical panels: Ten (10) years from date of substantial completion.
2. Grid: Ten (10) years from date of substantial completion.
3. Acoustical panels and grid systems with HumiGuard Plus or HumiGuard Max performance supplied by one source manufacturer is fifteen (15) years from date of substantial completion.

D. The Warranty shall not deprive the Owner of other rights the Owner may have under other provisions of the Contract Documents and will be in addition to and run concurrent with other warranties made by the Contractor under the requirements of the Contract Documents.

1.10 EXTRA MATERIALS

A. Furnish extra materials described below that match products installed and that are packaged with protective covering for storage and identified with labels describing contents.

1. Acoustical Ceiling Panels: Full-size panels equal to 2 percent of quantity installed for each type of panel.
2. Suspension System Components: Quantity of each exposed component equal to 2 percent of quantity installed.

PART 2 - PRODUCTS

2.01 ACOUSTICAL PANEL CEILINGS, GENERAL

A. Acoustical Panel Standard: Comply with ASTM E1264.

B. Metal Suspension System Standard: Comply with ASTM C635.

C. Attachment Devices: Size for five times the design load indicated in ASTM C635, Table 1, "Direct Hung," unless otherwise indicated.

D. Wire Hangers, Braces, and Ties: Zinc-coated carbon-steel wire; ASTM A641/A 641M, Class 1 zinc coating, soft temper.

1. Size: Select wire diameter so its stress at 3 times hanger design load (ASTM C635, Table 1, "Direct Hung") will be less than yield stress of wire, but provide not less than 0.106-inch diameter wire.

E. Metal Edge Moldings and Trim: Type and profile indicated or, if not indicated, manufacturer's standard moldings for edges and penetrations that comply with seismic design requirements; formed from sheet metal of same material, finish, and color as that used for exposed flanges of suspension system runners.

F. Refer to drawings for type, size, and color and pattern, etc.

2.02 MATERIALS

A. Products: Subject to compliance with requirements, provide Armstrong as basis product, or a comparable product approved by the Architect from one of the following manufacturers:

1. Chicago Metallic Corporation.

2. USG Interiors, Inc.

3. Certainteed

PART 3 - EXECUTION

3.01 EXAMINATION

A. Do not proceed with installation until all wet work such as concrete, terrazzo, plastering and painting has been completed and thoroughly dried out, unless expressly permitted by manufacturer's printed recommendations. (Exception: HumiGuard Max Ceilings)

3.02 PREPARATION

A. Measure each ceiling area and establish layout of acoustical units to balance border widths at opposite edges of each ceiling. Avoid use of less than half width units at borders, and comply with reflected ceiling plans. Coordinate panel layout with mechanical and electrical fixtures.

B. Coordination: Furnish layouts for preset inserts, clips, and other ceiling anchors whose installation is specified in other sections.

1. Furnish concrete inserts and similar devices to other trades for installation well in advance of time needed for coordination of other work.

3.03 INSTALLATION

A. Comply with ASTM C 636 and seismic design requirements indicated, per manufacturer's written instructions and CISCA's "Ceiling Systems Handbook".

B. Suspend ceiling hangers from building's structural members, plumb and free from contact with insulation or other objects within ceiling plenum. Splay hangers only where required to miss obstructions; offset resulting horizontal forces by bracing, countersplaying, or other equally effective means. Where width of ducts and other construction within ceiling plenum produces hanger spacings that interfere with location of hangers, use trapezes or equivalent devices. When steel framing does not permit installation of hanger wires at spacing required, install carrying channels or other supplemental support for attachment of hanger wires.

1. Do not support ceilings directly from permanent metal forms or floor deck; anchor into concrete slabs.

2. Do not attach hangers to steel deck tabs or to steel roof deck.

D. Install edge moldings and trim of type indicated at perimeter of acoustical ceiling area and where necessary to conceal edges of acoustical panels. Screw attach moldings to substrate at intervals not more than 16 inches o.c. and not more than 3 inches from ends, leveling with ceiling suspension system to a tolerance of 1/8 inch in 12 feet. Miter comers accurately and connect securely.

E. Install suspension system runners so they are square and securely interlocked with one another. Remove and replace dented, bent, or kinked members.

F. Install acoustical panels with undamaged edges and fit accurately into suspension system runners and edge moldings. Scribe and cut panels at borders and penetrations to provide a neat, precise fit.

3.04 ADJUSTING AND CLEANING

A. Replace damaged and broken panels.

B. Clean exposed surfaces of acoustical ceilings, including trim, edge moldings, and suspension members. Comply with manufacturer's instructions for cleaning and touch up of minor finish damage. Remove and replace work that cannot be successfully cleaned and repaired to permanently eliminate evidence of damage.

END OF SECTION

PART 1 - GENERAL

1.01 RELATED DOCUMENTS

A. Drawings and general provisions of the Contract, including General and Supplementary Conditions and Division 01 Specification Sections, apply to this Section.

1.02 SUMMARY

A. Section Includes:

1. Resilient base.
2. Resilient stair accessories.
3. Resilient molding accessories.

1.03 RELATED SECTIONS

1. Section 09 65 16 - Resilient Sheet Flooring for resilient sheet floor coverings.
2. Section 09 65 19 - Resilient Tile Flooring for resilient floor tile.

1.04 SUBMITTALS

A. Product Data: For each type of product indicated.

B. Samples: For each type of product indicated, in manufacturer's standard-size Samples but not less than 12 inches long, of each resilient product color, texture, and pattern required.

1.05 QUALITY ASSURANCE

A. Fire-Test-Response Characteristics: As determined by testing identical products according to ASTM E 648 or NFPA 253 by a qualified testing agency.

1. Critical Radiant Flux Classification: Class I, not less than 0.45 W/cm^2.

1.06 DELIVERY, STORAGE, AND HANDLING

A. Store resilient products and installation materials in dry spaces protected from the weather, with ambient temperatures maintained within range recommended by manufacturer, but not less than 50°F (10°C) or more than 90°F (32°C).

1.07 PROJECT CONDITIONS

A. Maintain ambient temperatures within range recommended by manufacturer in spaces to receive resilient products. but not less than 70°F (21°C) or more than 95°F (35°C), in spaces to receive resilient products during the following time periods:

1. 48 hours before installation.
2. During installation.
3. 48 hours after installation.

B. until Substantial Completion, maintain ambient temperatures within range recommended by manufacturer.

C. Install resilient products after other finishing operations, including painting, have been completed.

1.08 EXTRA MATERIALS

A. Furnish extra materials that match products installed, are packaged with protective covering for storage, and are identified with labels describing contents.

1. Furnish not less than 10 lineal feet for each 500 lineal feet, or fraction thereof, of each type, color, and size of resilient accessory installed.

PART 2 - PRODUCTS

2.01 RESILIENT BASE

A. Resilient Base:

1. Manufacturers: Subject to compliance with requirements, available manufacturers offering products that may be incorporated into the Work include, but are not limited to, the following:
   a. Armstrong World Industries, Inc.
   b. Johnsonite.

c. Roppe Corporation, USA.

d. Substitute: see section 01 25 00 - Substitution Procedures.

B. Resilient Base Standard: ASTM F1861.

1. Material Requirement: Type TP.

2. Manufacturing Method: Group I (solid, homogeneous).

3. Style: Cove base with toe.

C. Minimum Thickness: 0.125 inch.

D. Height: Minimum 4 inches.

E. Lengths: Coils in manufacturer's standard length.

F. Outside Comers: Job formed, back cut and bent to conform to corners.

G. Inside Comers: Job formed, back cut and bent to conform to corners.

H. Design Basis: As indicated in drawings.

2.02 RESILIENT STAIR ACCESSORIES

A. Resilient Stair Treads:

1. Manufacturers: Subject to compliance with requirements, available manufacturers offering products that may be incorporated into the Work include, but are not limited to, the following:

a. Johnsonite.

b. Roppe Corporation, USA.

B. Resilient Stair Treads Standard: ASTM F 2169.

1. Material Requirement: Type TS.

2. Manufacturing Method: Group 2, tread with contrasting color for the visually impaired.

C. Design Basis: As indicated in drawings.

D. Size: Lengths and depths to fit each stair tread in one piece or, for treads exceeding maximum lengths manufactured, in equal-length units.

E. Colors and Patterns: As indicated in drawings or selected by Architect from manufacturer’s standard full product line. More than one color may be selected.

2.03 RESILIENT MOLDING ACCESSORY

A. Resilient Molding Accessory:

1. Manufacturers: Subject to compliance with requirements, provide products by resilient base manufacturer.

B. Description: Reducer strips for floor finish transitions between carpeted and resilient floor covering.

C. Material: Rubber.

D. Profile and Dimensions: Manufacturer’s standard unless otherwise indicated. Thickness to match adjacent materials.

E. Color: Match resilient base.

2.04 INSTALLATION MATERIALS

A. Trowelable Leveling and Patching Compounds: Latex-modified, portland cement based or blended hydraulic-cement-based formulation provided or approved by manufacturer for applications indicated.

B. Adhesives: Water-resistant type recommended by manufacturer to suit resilient products and substrate conditions indicated.

C. Stair-Tread-Nose Filler: Two-part epoxy compound recommended by resilient tread manufacturer to fill nosing substrates that do not conform to tread contours.

PART 3 - EXECUTION

3.01 PREPARATION

A. Prepare substrates according to manufacturer's written instructions to ensure adhesion of resilient products.

B. Concrete Substrates for Resilient Stair Treads and Accessories: Prepare according to ASTM F 710.

1. Verify that substrates are dry and free of curing compounds, sealers, and hardeners.

2. Remove substrate coatings and other substances that are incompatible with adhesives and that

contain soap, wax, oil, or silicone, using mechanical methods recommended by manufacturer. Do not use solvents.

3. Alkalinity and Adhesion Testing: Perform tests recommended by manufacturer.

4. Moisture Testing: Perform tests recommended by manufacturer. Proceed with installation only after substrates pass testing.

C. Fill cracks, holes, and depressions in substrates with trowelable leveling and patching compound and remove bumps and ridges to produce a uniform and smooth substrate.

D. Do not install resilient products until they are same temperature as the space where they are to be installed.

1. Move resilient products and installation materials info spaces where they will be installed at least 48 hours in advance of installation.

E. Sweep and vacuum clean substrates to be covered by resilient products immediately before installation.

3.02 RESILIENT BASE INSTALLATION

A. Comply with manufacturer's written instructions for installing resilient base.

B. Apply resilient base to walls, columns, pilasters, casework and cabinets in toe spaces, and other permanent fixtures in rooms and areas where base is required.

C. Install resilient base in lengths as long as practicable without gaps at seams and with tops of adjacent pieces aligned.

D. Tightly adhere resilient base to substrate throughout length of each piece, with base in continuous contact with horizontal and vertical substrates.

E. Do not stretch resilient base during installation.

3.03 RESILIENT ACCESSORY INSTALLATION

A. Comply with manufacturer's written instructions for installing resilient accessories.

B. Resilient Stair Accessories:

1. Use stair-tread-nose finer to fill nosing substrates that do not conform to tread contours.

2. Tightly adhere to substrates throughout length of each piece.

3. For treads installed as separate, equal-length units, install to produce a flush joint between units.

C. Resilient Molding Accessories: Butt to adjacent materials and tightly adhere to substrates throughout length of each piece. Install reducer strips at edges of carpet resilient floor covering that would otherwise be exposed.

3.04 CLEANING AND PROTECTION

A. Comply with manufacturer's written instructions for cleaning and protection of resilient products.

B. Floor Polish: Remove soil, visible adhesive, and surface blemishes from resilient stair treads before applying liquid floor polish.

1. Apply two coats.

C. Cover resilient products until Substantial Completion.

END OF SECTION

----------THIS PAGE LEFT INTENTIONALLY BLANK----------

PART 1 - GENERAL

1.01 RELATED DOCUMENTS

A. Drawings and general provisions of the Contract, including General and Supplementary Conditions and Division 01 Specification Sections, apply to this Section.

1.02 SUMMARY

A. Section Includes:

1. Luxury Vinyl Tile (LVT) / Luxury Vinyl Plank (LVP).

B. Related Sections:

1. Section 09 65 13 "Resilient Base and Accessories" for resilient base, reducer strips, and other accessories installed with resilient floor coverings.
2. Section 09 65 16 "Resilient Sheet Flooring" for resilient sheet floor coverings.

1.03 ACTION SUBMITTALS

A. Product Data: For each type of product indicated.

B. Shop Drawings: For each type of floor tile. Include floor tile layouts, edges, columns, doorways, enclosing partitions, built-in furniture, cabinets, and cutouts.

1. Show details of special patterns.

C. Samples for Verification: Full-size units of each color and pattern of floor tile required.

D. Seam Samples: For seamless-installation technique indicated and for each flooring product, color, and pattern required; with seam running lengthwise and in center of 6-by-9-inch Sample applied to a rigid backing and prepared by Installer for this Project.

E. Product Schedule: For floor tile. Use same designations indicated on Drawings.

1.04 INFORMATIONAL SUBMITTALS

A. Qualification Data: For qualified Installer.

1.05 CLOSEOUT SUBMITTALS

A. Maintenance Data: For each type of floor tile to include in maintenance manuals.

1.06 MATERIALS MAINTENANCE SUBMITTALS

A. Furnish extra materials that match products installed and that are packaged with protective covering for storage and identified with labels describing contents.

1. Floor Tile: Furnish 1 box for every 50 boxes or fraction thereof, of each type, color, and pattern of floor tile installed.

1.07 QUALITY ASSURANCE

A. Installer Qualifications: A qualified installer who employs workers for this Project who are competent in techniques required by manufacturer for floor tile installation and seaming method indicated.

1. Engage an installer who employs workers for this Project who are trained or certified by manufacturer for installation techniques required.

B. Fire-Test-Response Characteristics: As determined by testing identical products according to ASTM E 648 or NFPA 253 by a qualified testing agency.

1. Critical Radiant Flux Classification: Class I, not less than 0.45 W/cm^2.

1.08 DELIVERY, STORAGE, AND HANDLING

A. Store floor tile and installation materials in dry spaces protected from the weather, with ambient temperatures maintained within range recommended by manufacturer, but not less than 50°F or more than 90°F. Store floor tiles on flat surfaces.

1.09 PROJECT CONDITIONS

A. Maintain ambient temperatures within range recommended by manufacturer, but not less than 70°F or more than 95°F, in spaces to receive floor tile during the following time periods:

1. 48 hours before installation.
2. During installation.
3. 48 hours after installation.

B. Until Substantial Completion, maintain ambient temperatures within range recommended by manufacturer, but not less than 55°F or more than 95°F .

C. Close spaces to traffic during floor tile installation.

D. Close spaces to traffic for 48 hours after floor tile installation.

E. Install floor tile after other finishing operations, including painting, have been completed.

1.10 WARRANTY

A. Manufacturer Warranty: Prepare and submit in accordance with Division 01 requirements.

1. LVT Resilient Tile Flooring: Submit manufacturer's limited warranty stating Resilient Tile Flooring is guaranteed to be free from wear-through due to normal use in commercial applications.

a. Warranty Period: Ten (10) year limited warranty commencing on date of Substantial Completion.

PART 2 - PRODUCTS

2.01 GENERAL

A. Basis-of-Design products including color, texture, and size are indicated in drawings.

2.02 LUXURY VINYL TILE

A. Products: Subject to compliance with requirements, provide one of the following:

1. Mannington Commercial.

2. Armstrong World Industries, Inc.

3. Tarkett, Inc.

4. Substitutions: see Section 01 25 00 - Substitution Procedures.

B. LVT: Printed film vinyl tile with an embossed scuff resistant surface, ASTM F1700

1. Class: Class III.

2. Type: Type B.

3. Thickness: Min. 0.125 inch.

2.03 INSTALLATION MATERIALS

A. Trowelable Leveling and Patching Compounds: Latex-modified, portland cement based or blended hydraulic-cement-based formulation provided or approved by manufacturer for applications indicated.

B. Adhesives: Water-resistant type recommended by manufacturer to suit floor tile and substrate conditions indicated.

1. Adhesives shall comply with the following limits for VOC content when calculated according to 40 CFR 59, Subpart D (EPA Method 24):

a. VCT and Asphalt Tile Adhesives: Not more than 50 g/L.

b. Rubber Floor Adhesives: Not more than 60 g/L.

C. Floor Polish: Provide protective liquid floor polish products as recommended by manufacturer.

PART 3 - EXECUTION

3.01 EXAMINATION

A. Examine substrates, with Installer present, for compliance with requirements for maximum moisture content and other conditions affecting performance of the Work.

B. Verify that finishes of substrates comply with tolerances and other requirements specified in other Sections and that substrates are free of cracks, ridges, depressions, scale, and foreign deposits that might interfere with adhesion of floor tile.

C. Proceed with installation only after unsatisfactory conditions have been corrected.

3.02 PREPARATION

A. Prepare substrates according to manufacturer's written instructions to ensure adhesion of resilient products.

B. Concrete Substrates: Prepare according to ASTM F 710.

1. Verify that substrates are dry and free of curing compounds, sealers, and hardeners.

2. Remove substrate coatings and other substances that are incompatible with adhesives and that

contain soap, wax, oil, or silicone, using mechanical methods recommended by manufacturer. Do not use solvents.

3. Alkalinity and Adhesion Testing: Perform tests recommended by manufacturer. Proceed with installation only after substrates pass testing.

4. Moisture Testing: Perform tests recommended by manufacturer and as follows. Proceed with installation only after substrates pass testing.

a. Perform anhydrous calcium chloride test, ASTM F 1869. Proceed with installation only after substrates have maximum moisture-vapor-emission rate of 3 lb of water/1000 sq. ft. in 24 hours.

b. Perform relative humidity test using in situ probes, ASTM F 2170. Proceed with installation only after substrates have a maximum 75% relative humidity level measurement.

C. Access Flooring Panels: Remove protective film of oil or other coating using method recommended by access flooring manufacturer.

D. Fill cracks, holes, and depressions in substrates with trowelable leveling and patching compound and remove bumps and ridges to produce a uniform and smooth substrate.

E. Do not install floor tiles until they are same temperature as space where they are to be installed.

1. Move resilient products and installation materials into spaces where they will be installed at least 48 hours in advance of installation.

F. Sweep and vacuum clean substrates to be covered by resilient products immediately before installation.

3.03 FLOOR TILE INSTALLATION

A. Comply with manufacturer's written instructions for installing floor tile.

B. Lay out floor tiles from center marks established with principal walls, discounting minor offsets, so tiles at opposite edges of room are of equal width. Adjust as necessary to avoid using cut widths that equal less than one-half tile at perimeter.

1. Lay tiles square with room axis in pattern indicated.

C. Match floor tiles for color and pattern by selecting tiles from cartons in the same sequence as manufactured and packaged, if so numbered. Discard broken, cracked, chipped, or deformed tiles.

1. Lay tiles in pattern of colors and sizes indicated.

D. Scribe, cut, and fit floor tiles to butt neatly and tightly to vertical surfaces and permanent fixtures including built-in furniture, cabinets, pipes, outlets, and door frames.

E. Extend floor tiles into toe spaces, door reveals, closets, and similar openings. Extend floor tiles to center of door openings.

F. Maintain reference markers, holes, and openings that are in place or marked for future cutting by repeating on floor tiles as marked on substrates. Use chalk or other nonpermanent, nonstaining marking device.

G. Install floor tiles on covers for telephone and electrical ducts, building expansion-joint covers, and similar items in finished floor areas. Maintain overall continuity of color and pattern between pieces of tile installed on covers and adjoining tiles. Tightly adhere tile edges to substrates that abut covers and to cover perimeters.

H. Adhere floor tiles to flooring substrates using a full spread of adhesive applied to substrate to produce a completed installation without open cracks, voids, raising and puckering at joints, telegraphing of adhesive spreader marks, and other surface imperfections.

3.04 CLEANING AND PROTECTION

A. Comply with manufacturer's written instructions for cleaning and protection of floor tile.

B. Perform the following operations immediately after completing floor tile installation:

1. Remove adhesive and other blemishes from exposed surfaces.

2. Sweep and vacuum surfaces thoroughly.

3. Damp-mop surfaces to remove marks and soil.

C. Protect floor tile products from mars, marks, indentations, and other damage from construction operations and placement of equipment and fixtures during remainder of construction period.

D. Floor Polish: Remove soil, visible adhesive, and surface blemishes from floor tile surfaces before applying liquid floor polish.

1. Apply two coats.

E. Cover floor tile until Substantial Completion.

END OD SECTION

PART 1 - GENERAL

1.01 RELATED DOCUMENTS

A. Drawings and General Provisions of the Contract including General and Supplementary Conditions and Division 1 sections apply to the work in this section only.

1.02 SECTION INCLUDES

A. Carpet Tile flooring as shown on the drawings and schedules and as indicated by the requirements of this section.

1.03 RELATED SECTIONS

A. Division 03 30 00 - Cast-in-Place Concrete.

1.04 SUBMITTALS

A. Submit under provisions of Section 01 33 00 - Submittals Procedures.

B. Product Data: Manufacturer's data sheets on each product to be used, including:

1. Preparation instructions and recommendations.
2. Storage and handling requirements and recommendations.
3. Installation methods.

C. Verification Samples: For each finish product specified, two samples, representing actual product and finish.

D. Extra Stock: Submit extra stock equal to 2% of total installed.

1.05 QUALITY ASSURANCE

A. Manufacturer Qualifications: Minimum 5 year experience manufacturing similar products.

B. Installer Qualifications: Minimum 2 year experience installing similar products.

C. Performance: Fire performance meeting requirements of building code and local authorities.

D. Mock-Up: Provide a mock-up for evaluation of surface preparation techniques and application workmanship.

1. Finish areas designated by Architect.
2. Do not proceed with remaining work until workmanship is approved by Architect.
3. Refinish mock-up area as required to produce acceptable work.

1.06 PRE-INSTALLATION MEETINGS

A. Convene minimum two weeks prior to starting work of this section.

1.07 DELIVERY, STORAGE, AND HANDLING

A. Deliver and store products in manufacturer's unopened packaging bearing the brand name and manufacturer's identification until ready for installation.

B. Handling: Handle materials to avoid damage.

1.08 PROJECT CONDITIONS

A. Maintain environmental conditions (temperature, humidity, and ventilation) within limits recommended by manufacturer for optimum results. Do not install products under environmental conditions outside manufacturer's recommended limits.

1.09 SEQUENCING

A. Ensure that products of this section are supplied to affected trades in time to prevent interruption of construction progress.

PART 2 - PRODUCTS

2.01 MANUFACTURERS

A. Provide carpet tiles as indicated in drawings.

B. Requests for substitutions will be considered in accordance with provisions of Section 01 25 00 - Substitutions Procedures.

2.02 MATERIALS

A. Carpet Tile:

1. Material: As indicated in drawings.
2. Installation Method: Glue-down.
3. Auxiliary Materials:
    a. Edge guards.
    b. Adhesives, cements and fasteners.
    c. Leveling compound.

PART 3 - EXECUTION

3.01 EXAMINATION

A. Do not begin installation until substrates have been properly prepared.

B. If substrate preparation is the responsibility of another installer, notify Architect of unsatisfactory preparation before proceeding.

3.02 PREPARATION

A. Clean surfaces thoroughly prior to installation.

B. Prepare surfaces using the methods recommended by the manufacturer for achieving the best result for the substrate under the project conditions.

3.03 INSTALLATION

A. Install in accordance with manufacturer's instructions and in proper relationship with adjacent construction. Test for proper operation and adjust until satisfactory results are obtained.

B. Comply with recommendations of Carpet and Rug Institute 'Specifier's Handbook'.

3.04 PROTECTION

A. Protect installed products until completion of project.

B. Touch-up, repair or replace damaged products before Substantial Completion.

END OF SECTION

PART 1 - GENERAL

1.01 RELATED DOCUMENTS

A. Drawings and general conditions of Contract, including General and Supplementary Conditions and Divisions 01 Specification sections apply to work of this section.

1.02 SUMMARY

A. Section includes surface preparation and the application of paint systems on interior and exterior substrates.

B. Related Requirements:

1. Section 05 12 00 - Structural Steel Framing for shop priming of metal substrates with primers specified in this Section.
2. Section 09 93 00 - Staining and Transparent Finishing for surface preparation and the application of wood stains and transparent finishes on interior wood substrates.

1.03 DEFINITIONS

A. Gloss Level 1: Maximum 5 units at 60 degrees, according to ASTM D 523 (flat).

B. Gloss Level 2: Maximum 10 units at 60 degrees, according to ASTM D 523 (velvet).

C. Gloss Level 3: 10 to 25 units at 60 degrees, according to ASTM D 523 (eggshell).

D. Gloss Level 4: 25 to 35 units at 60 degrees, according to ASTM D 523 (satin).

E. Gloss Level 5: 35 to 70 units at 60 degrees, according to ASTM D 523 (semigloss).

F. Gloss Level 6: 70 to 85 units at 60 degrees, according to ASTM D 523 (gloss).

G. Gloss Level 7: More than 85 units at 60 degrees, according to ASTM D 523 (high gloss).

1.04 SUBMITTALS

A. Product Data: For each type of product. Include preparation requirements and application instructions.

B. Samples for Initial Selection: For each type of topcoat product.

C. Samples for Verification: For each type of paint system and in each color and gloss of topcoat.

1. Submit Samples on rigid backing, 8 inches square.
2. Step coats on Samples to show each coat required for system.
3. Label each coat of each Sample.
4. Label each Sample for location and application area.

D. Product List: For each product indicated, include the following:

1. Cross-reference to paint system and locations of application areas. Use same designations indicated on Drawings and in schedules.
2. Printout of current "MPI Approved Products List" for each product category specified in Part 2, with the proposed product highlighted.
3. Include above information in project closeout Operations and Maintenance manuals.

1.05 EXTRA MATERIALS

A. Furnish extra materials, from the same product run, that match products installed and that are packaged with protective covering for storage and identified with labels describing contents.

1. Paint: 2 percent, but not less than 1 gal. of each material and color applied.

1.06 QUALITY ASSURANCE

A. Manufacturer Qualifications: Company specializing in manufacturing the products specified, with minimum FIVE years documented experience.

B. Applicator Qualifications: Company specializing in performing the type of work specified with minimum THREE years experience.

1.07 MOCK-UP

A. See Section01 40 00 - Quality Requirements, for general requirements for mock-up.

B. Provide illustrating paint coating color, texture, and finish where directed by Architect/Owner.

C. Mock-up may remain as part of the work.

1.08 DELIVERY, STORAGE, AND HANDLING

A. Store materials not in use in tightly covered containers in well-ventilated areas with ambient temperatures continuously maintained at not less than 45° F.

1. Maintain containers in clean condition, free of foreign materials and residue.
2. Remove rags and waste from storage areas daily.

1.09 FIELD CONDITIONS

A. Apply paints only when temperature of surfaces to be painted and ambient air temperatures are between 50 and 95° F.

B. Do not apply paints when relative humidity exceeds 85 percent; at temperatures less than 5° F above the dew point; or to damp or wet surfaces.

PART 2 - PRODUCTS

2.01 MANUFACTURERS

A. Manufacturers: Subject to compliance with requirements, provide products by one of the following:

1. Benjamin Moore & Company.
2. Devoe Paint.
3. Dunn-Edwards.
4. ICI Paints.
5. PPG Industries.
6. Pratt & Lambert Paints
7. Sherwin-Williams Company.
8. Substitutions: see section 01 25 00 - Substitution Procedures.

B. Products: Subject to compliance with requirements, provide one of the products listed in other Part 2 articles for the paint category indicated.

2.02 PAINT, GENERAL

A. MPI Standards: Provide products that comply with MPI standards indicated and that are listed in its "MPI Approved Products List."

B. Ready mixed, unless intended to be a field-catalyzed coating.

C. Material Compatibility:

1. Provide materials for use within each paint system that are compatible with one another and substrates indicated, under conditions of service and application as demonstrated by manufacturer, based on testing and field experience.
2. Provide paints and coatings of a soft paste consistency, capable of being readily and uniformly dispersed to a homogeneous coating, with good flow and brushing properties, and capable of drying or curing free of streaks or sags.
3. Supply each coating material in quantity required to complete entire project’s work from a single production run.
4. Do not reduce, thin, or dilute coatings or add materials to coatings unless such procedure is specifically described in manufacturer’s product instructions.
5. For each coat in a paint system, provide products recommended in writing by manufacturers of topcoat for use in paint system and on substrate indicated.

D. VOC Content: Products shall comply with the most stringent VOC limits of authorities having jurisdiction and, for interior paints and coatings applied at Project site, the following VOC limits, exclusive of colorants added to a tint base, when calculated according to 40 CFR 59, Subpart D (EPA Method 24).

1. Flat Paints and Coatings: 50 g/L.
2. Nonflat Paints and Coatings: 150 g/L.
3. Dry-Fog Coatings: 400 g/L.
4. Primers, Sealers, and Undercoaters: 200 g/L.
5. Anticorrosive and Antirust Paints Applied to Ferrous Metals: 250 g/L.
6. Zinc-Rich Industrial Maintenance Primers: 340 g/L.
7. Pretreatment Wash Primers: 420 g/L.

8. Floor Coatings: 100 g/L.
9. Shellacs, Clear: 730 g/L.
10. Shellacs, Pigmented: 550 g/L.

E. Low-Emitting Materials: Interior stains and finishes shall comply with the testing and product requirements of the California Department of Health Services' "Standard Practice for the Testing of Volatile Organic Emissions from Various Sources Using Small-Scale Environmental Chambers."

F. Colors: As selected by Architect from manufacturer's full range.

2.03 PRIMERS/SEALERS

A. General: Where the manufacturer offers options on primers for a particular substrate, use primer categorized as “best” by the manufacturer.

2.04 PAINTS

A. Exterior:

1. Latex, Exterior Flat (Gloss Level 1): MPI #10.
2. Latex, Exterior Low-Sheen (Gloss Level 3-4): MPI #15.
3. Latex, Exterior Semi-Gloss (Gloss Level 5): MPI #11.
4. Latex, Exterior, Gloss (Gloss Level 6): MPI #119.
5. Light Industrial Coating, Exterior, Water Based, Eggshell (Gloss Level 3): MPI #161.
5. Light Industrial Coating, Exterior, Water Based, Semi-Gloss (Gloss Level 5): MPI #163.
6. Light Industrial Coating, Exterior, Water Based, Gloss (Gloss Level 6): MPI #164.

B. Interior:

1. Latex, Interior, Flat, (Gloss Level 1): MPI #53.
2. Latex, Interior, Velvet, (Gloss Level 2): MPI #44.
2. Latex, Interior, Eggshell, (Gloss Level 3): MPI #52.
2. Latex, Interior, Satin, (Gloss Level 4): MPI #43.
3. Latex, Interior, Semi-Gloss (Gloss Level 5): MPI #54.
4. Latex, Interior, Gloss (Gloss Level 6): MPI #114.
5. Latex, Interior, Institutional Low Odor/VOC, Flat (Gloss Level 1): MPI #143.
6. Latex, Interior, Institutional Low Odor/VOC, Velvet (Gloss Level 2): MPI #144.
7. Latex, Interior, Institutional Low Odor/VOC, Eggshell (Gloss Level 3): MPI #145.
8. Latex, Interior, Institutional Low Odor/VOC, Satin (Gloss Level 4): MPI #146.
9. Latex, Interior, Institutional Low Odor/VOC, Semi-Gloss (Gloss Level 5): MPI #147.
10. Latex, Interior, Institutional Low Odor/VOC, Gloss (Gloss Level 6): MPI #148.
11. Light Industrial Coating, Interior, Eggshell (Gloss level 3): MPI #151.
12. Light Industrial Coating, Interior, Semi-Gloss (Gloss level 5): MPI #153.
13. Light Industrial Coating, Interior, Gloss (Gloss level 6): MPI #154.

2.05 SOURCE QUALITY CONTROL

A. Testing of Paint Materials: Owner reserves the right to invoke the following procedure:

1. Owner will engage the services of a qualified testing agency to sample paint materials. Contractor will be notified in advance and may be present when samples are taken. If paint materials have already been delivered to Project site, samples may be taken at Project site. Samples will be identified, sealed, and certified by testing agency.
2. Testing agency will perform tests for compliance with product requirements.
3. Owner may direct Contractor to stop applying coatings if test results show materials being used do not comply with product requirements. Contractor shall remove noncomplying paint materials from Project site, pay for testing, and repaint surfaces painted with rejected materials. Contractor will be required to remove rejected materials from previously painted surfaces if, on repainting with complying materials, the two paints are incompatible.

PART 3 -EXECUTION

3.01 EXAMINATION

A. Examine substrates and conditions, with Applicator present, for compliance with requirements for maximum moisture content and other conditions affecting performance of the Work.

B. Maximum Moisture Content of Substrates: When measured with an electronic moisture meter as follows:

1. Concrete: 12 percent.
2. Masonry (Clay and CMU): 12 percent.
3. Wood: 15 percent.
4. Gypsum Board: 12 percent.

C. Gypsum Board Substrates: Verify that finishing compound is sanded smooth.

D. Verify suitability of substrates, including surface conditions and compatibility with existing finishes and primers.

E. Proceed with coating application only after unsatisfactory conditions have been corrected.

1. Application of coating indicates acceptance of surfaces and conditions.

3.02 PREPARATION

A. Comply with manufacturer's written instructions and recommendations in "MPI Manual" applicable to substrates indicated.

B. Remove hardware, covers, plates, and similar items already in place that are removable and are not to be painted. If removal is impractical or impossible because of size or weight of item, provide surface-applied protection before surface preparation and painting.

1. After completing painting operations, use workers skilled in the trades involved to reinstall items that were removed. Remove surface-applied protection if any.

C. Clean substrates of substances that could impair bond of paints, including dust, dirt, oil, grease, and incompatible paints and encapsulants.

1. Remove incompatible primers and reprime substrate with compatible primers or apply tie coat as required to produce paint systems indicated.

D. Concrete Substrates: Remove release agents, curing compounds, efflorescence, and chalk. Do not paint surfaces if moisture content or alkalinity of surfaces to be painted exceeds that permitted in manufacturer's written instructions.

E. Masonry Substrates: Remove efflorescence and chalk. Do not paint surfaces if moisture content or alkalinity of surfaces or mortar joints exceed that permitted in manufacturer's written instructions.

F. Steel Substrates: Remove rust, loose mill scale, and shop primer if any. Clean using methods recommended in writing by paint manufacturer, but not less than the following:

1. SSPC-SP 2, "Hand Tool Cleaning."
2. SSPC-SP 3, "Power Tool Cleaning."
3. SSPC-SP 7/NACE No. 4, "Brush-off Blast Cleaning."
4. SSPC-SP 11, "Power Tool Cleaning to Bare Metal."

G. Shop-Primed Steel Substrates: Clean field welds, bolted connections, and abraded areas of shop paint, and paint exposed areas with the same material as used for shop priming to comply with SSPC-PA 1 for touching up shop-primed surfaces.

H. Galvanized-Metal Substrates: Remove grease and oil residue from galvanized sheet metal fabricated from coil stock by mechanical methods to produce clean, lightly etched surfaces that promote adhesion of subsequently applied paints.

I. Wood Substrates:

1. Scrape and clean knots, and apply coat of knot sealer before applying primer.
2. Sand surfaces that will be exposed to view, and dust off.
3. Prime edges, ends, faces, undersides, and backsides of wood.
4. After priming, fill holes and imperfections in the finish surfaces with putty or plastic wood filler. Sand smooth when dried.

J. Cotton or Canvas Insulation Covering Substrates: Remove dust, dirt, and other foreign material that might impair bond of paints to substrates.

3.03 APPLICATION

A. Apply paints according to manufacturer's written instructions and to recommendations in "MPI Manual."

1. Use applicators and techniques suited for paint and substrate indicated.

2. Paint surfaces behind movable equipment and furniture same as similar exposed surfaces. Before final installation, paint surfaces behind permanently fixed equipment or furniture with prime coat only.

3. Paint both sides and edges of exterior doors and entire exposed surface of exterior door frames.

4. Paint front and backsides of access panels, removable or hinged covers, and similar hinged items to match exposed surfaces.

5. Do not paint over labels of independent testing agencies or equipment name, identification, performance rating, or nomenclature plates.

6. Primers specified in painting schedules may be omitted on items that are factory primed or factory finished if acceptable to topcoat manufacturers.

B. Tint each undercoat a lighter shade to facilitate identification of each coat if multiple coats of same material are to be applied. Tint undercoats to match color of topcoat, but provide sufficient difference in shade of undercoats to distinguish each separate coat.

C. If undercoats or other conditions show through topcoat, apply additional coats until cured film has a uniform paint finish, color, and appearance.

D. Apply paints to produce surface films without cloudiness, spotting, holidays, laps, brush marks, roller tracking, runs, sags, ropiness, or other surface imperfections. Cut in sharp lines and color breaks.

E. Painting Fire Suppression, Plumbing, HVAC, Electrical, Communication, and Electronic Safety and Security Work:

1. Paint the following work where exposed in equipment rooms:

a. Equipment, including panelboards and switch gear.

b. Uninsulated metal piping.

c. Uninsulated plastic piping.

d. Pipe hangers and supports.

e. Metal conduit.

f. Plastic conduit.

g. Tanks that do not have factory-applied final finishes.

h. Duct, equipment, and pipe insulation having cotton or canvas insulation covering or other paintable jacket material.

2. Paint the following work where exposed in occupied spaces:

a. Equipment, including panelboards.

b. Uninsulated metal piping.

c. Uninsulated plastic piping.

d. Pipe hangers and supports.

e. Metal conduit.

f. Plastic conduit.

g. Duct, equipment, and pipe insulation having cotton or canvas insulation covering or other paintable jacket material.

h. Other items as directed by Architect.

3. Paint portions of internal surfaces of metal ducts, without liner, behind air inlets and outlets that are visible from occupied spaces.

3.04 FIELD QUALITY CONTROL

A. Dry Film Thickness Testing: Owner may engage the services of a qualified testing and inspecting agency to inspect and test paint for dry film thickness.

1. Contractor shall touch up and restore painted surfaces damaged by testing.

2. If test results show that dry film thickness of applied paint does not comply with paint manufacturer's written recommendations, Contractor shall pay for testing and apply additional coats as needed to provide dry film thickness that complies with paint manufacturer's written recommendations.

30.5 CLEANING AND PROTECTION

A. At end of each workday, remove rubbish, empty cans, rags, and other discarded materials from Project site.

B. After completing paint application, clean spattered surfaces. Remove spattered paints by washing, scraping, or other methods. Do not scratch or damage adjacent finished surfaces.

C. Protect work of other trades against damage from paint application. Correct damage to work of other trades by cleaning, repairing, replacing, and refinishing, as approved by Architect, and leave in an undamaged condition.

D. At completion of construction activities of other trades, touch up and restore damaged or defaced painted surfaces.

3.06 EXTERIOR PAINTING SCHEDULE

A. Not all listed paint schedules used, refer to drawings for sheen and paint surface location.

B. Concrete Substrates, Nontraffic Surfaces:

1. Latex System:

a. Prime Coat: Primer, alkali resistant, water based, MPI #3.

b. Topcoat: Latex, exterior semi-gloss (Gloss Level 5), MPI #11.

C. CMU Substrates:

1. Latex System:

a. Prime Coat: Block filler, latex, interior/exterior, MPI #4.

b. Topcoat: Latex, exterior semi-gloss (Gloss Level 5), MPI #11.

2. Latex over Alkali-Resistant Primer System:

a. Prime Coat: Primer, alkali resistant, water based, MPI #3.

b. Topcoat: Latex, exterior semi-gloss (Gloss Level 5), MPI #11.

D. Steel Substrates:

1. Water-Based Light Industrial Coating System:

a. Prime Coat: Shop primer specified in Section 05 12 00 "Structural Steel Framing" where substrate is specified.

b. Topcoat: Light industrial coating, exterior, water based, semi-gloss (Gloss Level 5), MPI #163; or Gloss (Gloss Level 6): MPI #164.

2. Water-Based Light Industrial Coating System:

a. Prime Coat: Primer, Alkyd for metal, MPI # 107.

b. Topcoat: Light industrial coating, exterior, water based, semi-gloss (Gloss Level 5), MPI #163; or Gloss (Gloss Level 6): MPI #164.

E. Galvanized-Metal Substrates:

1. Water-Based Light Industrial Coating System:

a. Prime Coat: Primer, galvanized, water based, MPI #134.

b. Topcoat: Light industrial coating, exterior, water based, semi-gloss (Gloss Level 5), MPI #163.

F. Wood Substrates: Including wood trim doors.

1. Latex System:

a. Prime Coat: Primer, latex for exterior wood, MPI #6.

b. Topcoat: Latex, exterior semi-gloss (Gloss Level 5), MPI #11; or Gloss (Gloss level 6), MPI # 119.

G. Exterior Gypsum Board Substrates:

1. Latex System:

a. Prime Coat: Latex, exterior, matching topcoat.

b. Topcoat: Latex, exterior semi-gloss (Gloss Level 5), MPI #11.

3.06 INTERIOR PAINTING SCHEDULE

A. Not all listed paint schedules used, refer to drawings for sheen and paint surface location.

B. Concrete Substrates, Non-traffic Surfaces:

1. Institutional Low-Odor/VOC Latex System:

a. Prime Coat: Primer sealer, interior, institutional low odor/VOC, MPI #149.

b. Intermediate Coat: Latex, interior, institutional low odor/VOC, matching topcoat.

c. Topcoat: Latex, interior, institutional low odor/VOC, semi-gloss (Gloss Level 5), MPI #147.

C. CMU Substrates:

1. Institutional Low-Odor/VOC Latex System:

a. Block Filler: Block filler, latex, interior/exterior, MPI #4.

b. Intermediate Coat: Latex, interior, institutional low odor/VOC, matching topcoat.

c. Topcoat: Latex, interior, institutional low odor/VOC, semi-gloss (Gloss Level 3), MPI #145.

D. Steel Substrates:

1. Latex over Alkyd Primer System:

a. Prime Coat: Shop primer specified in Section 05 12 00 "Structural Steel Framing" where substrate is specified.

b. Intermediate Coat: Latex, interior, matching topcoat.

c. Topcoat: Latex, interior, semi-gloss (Gloss Level 5), MPI #54; or Latex, Interior, Gloss (Gloss Level 6): MPI # 114.

2. Institutional Low-Odor/VOC Latex System:

a. Prime Coat: Primer, rust-inhibitive, water based MPI #107.

b. Intermediate Coat: Latex, interior, institutional low odor/VOC, matching topcoat.

c. Topcoat: Latex, interior, institutional low odor/VOC, semi-gloss (Gloss Level 5), MPI #147; or Gloss (Gloss Level 6): MPI #148.

E. Galvanized-Metal Substrates:

1. Latex over Waterborne Primer System:

a. Prime Coat: Primer, galvanized, water based, MPI #134.

b. Intermediate Coat: Latex, interior, matching topcoat.

c. Topcoat: Latex, interior, semi-gloss (Gloss Level 5), MPI #54.

F. Wood Substrates: Including wood trim doors wood-based panel products.

1. Institutional Low-Odor/VOC Latex System:

a. Prime Coat: Primer, latex, for interior wood, MPI #39.

b. Intermediate Coat: Latex, interior, institutional low odor/VOC, matching topcoat.

c. Topcoat: Latex, interior, institutional low odor/VOC, semi-gloss (Gloss Level 5), MPI #147; or Gloss (Gloss Level 6): MPI #148.

G. Gypsum Board or Plaster Substrates:

1. Use anti-microbial paint at kitchen, restrooms, and janitor rooms.

2. Institutional Low-Odor/VOC Latex System:

a. Prime Coat: Primer sealer, interior, institutional low odor/VOC, MPI #149.

b. Intermediate Coat: Latex, interior, institutional low odor/VOC, matching topcoat.

c. Topcoat: Latex, interior, institutional low odor/VOC, flat (Gloss Level 1), MPI #143; eggshell (Gloss Level 3), MPI #145; or semi-gloss (Gloss Level 5), MPI #147.

H. Cotton or Canvas and ASJ Insulation-Covering Substrates: Including pipe and duct coverings.

1. Latex System:

a. Prime Coat: Primer sealer, latex, interior, MPI #50.

b. Intermediate Coat: Latex, interior, matching topcoat.

c. Topcoat: Latex, interior, flat (Gloss Level 1), MPI #53.

I. Existing Glazing Tile (Room E126, E127, E128)

1. Tile Preparation:

a. Deep clean the glazed tile and grout. Remove all dirt, oil, wax, grease, mold, etc.

b. Repair or replace any broken tile or bad grout.

c. Sand the entire surface using 400-grit sandpaper to remove gloss and smooth the tile.

d. Clean the wall using a damp rag to get all of the dust from the sanding off of the wall. Allow the wall to dry completely.

2. Light Industrial Coating System:
    a. Prime Coat: Primer, Bonding, Water based, MPI #17.
    b. Intermediate Coat: Alkyd, interior, matching topcoat.
    c. Topcoat: Alkyd, interior, eggshell (Gloss Level 3), MPI #151.

END OF SECTION

PART 1 - GENERAL

1.01 RELATED DOCUMENTS

A. Drawings and general conditions of Contract, including General and Supplementary Conditions and Divisions 01 Specification sections apply to work of this section.

1.02 SUMMARY

A. Section includes surface preparation and application of wood finishes.

1. Interior Substrates:

a. Dressed lumber (finish carpentry).

b. Exposed wood panel products.

B. Related Requirements:

1. Section 09 91 00 - Painting for standard paint systems on exterior and interior substrates.

1.03 DEFINITIONS

A. Gloss Level 1: Maximum 5 units at 60 degrees, according to ASTM D 523 (flat).

B. Gloss Level 2: Maximum 10 units at 60 degrees, according to ASTM D 523 (velvet).

C. Gloss Level 3: 10 to 25 units at 60 degrees, according to ASTM D 523 (eggshell).

D. Gloss Level 4: 25 to 35 units at 60 degrees, according to ASTM D 523 (satin).

E. Gloss Level 5: 35 to 70 units at 60 degrees, according to ASTM D 523 (semigloss).

F. Gloss Level 6: 70 to 85 units at 60 degrees, according to ASTM D 523 (gloss).

G. Gloss Level 7: More than 85 units at 60 degrees, according to ASTM D 523 (high gloss).

1.04 ACTION SUBMITTALS

A. Product Data: For each type of product indicated. Include preparation requirements and application instructions.

B. Samples for Initial Selection: For each type of product indicated.

C. Samples for Verification: For each type of finish system and in each color and gloss of finish indicated.

1. Submit Samples on representative samples of actual wood substrates, 8 inches square.

2. Label each Sample for location and application area.

D. Product List: For each product indicated, include the following:

1. Cross-reference to finish system and locations of application areas. Use same designations indicated on Drawings and in schedules.

2. Printout of current "MPI Approved Products List" for each product category specified in Part 2, with the product proposed for use highlighted.

1.05 MAINTENANCE MATERIAL SUBMITTALS

A. Furnish extra materials, from the same product run, that match products installed and that are packaged with protective covering for storage and identified with labels describing contents.

1. Stains and Transparent Finishes: 2 percent, but not less than 1 gal. of each material and color applied.

1.06 QUALITY ASSURANCE

A. Manufacturer Qualifications: Company specializing in manufacturing the products specified, with minimum ten years documented experience.

B. Applicator Qualifications: Company specializing in performing the type of work specified with minimum five years experience.

1.07 MOCK-UP

A. See Section01 40 00 - Quality Requirements, for general requirements for mock-up.

B. Provide illustrating staining coating color, texture, and finish where directed by Architect/Owner.

C. Mock-up may remain as part of the work.

1.08 DELIVERY, STORAGE, AND HANDLING

A. Store materials not in use in tightly covered containers in well-ventilated areas with ambient temperatures continuously maintained at not less than 45°F.

1. Maintain containers in clean condition, free of foreign materials and residue.

2. Remove rags and waste from storage areas daily.

1.09 FIELD CONDITIONS

A. Apply finishes only when temperature of surfaces to be finished and ambient air temperatures are between 50 and 95°F.

B. Do not apply finishes when relative humidity exceeds 85 percent; at temperatures less than 5°F above the dew point; or to damp or wet surfaces.

C. Do not apply exterior finishes in snow, rain, fog, or mist.

PART 2 - PRODUCTS

2.01 MANUFACTURERS

A. Manufacturers: Subject to compliance with requirements, provide products by the following:

1. Benjamin Moore & Company.

2. Devoe Paint.

3. Dunn-Edwards.

4. ICI Paints.

5. PPG Industries.

6. Pratt & Lambert Paints

7. Sherwin-Williams Company.

8. Substitutions: see section 01 25 00 - Substitution Procedures.

B. Products: Subject to compliance with requirements, provide product listed in other Part 2 articles for the category indicated.

2.02 MATERIALS, GENERAL

A. MPI Standards: Provide products that comply with MPI standards indicated and that are listed in its "MPI Approved Products List."

B. Material Compatibility:

1. Provide materials for use within each finish system that are compatible with one another and substrates indicated, under conditions of service and application as demonstrated by manufacturer, based on testing and field experience.

2. For each coat in a finish system, provide products recommended in writing by manufacturers of topcoat for use in finish system and on substrate indicated.

C. VOC Content: Products shall comply with VOC limits of authorities having jurisdiction and, for interior stains and finishes applied at project site, the following VOC limits, exclusive of colorants added to a tint base, when calculated according to 40 CFR 59, Subpart D (EPA Method 24).

1. Clear Wood Finishes, Varnishes: VOC not more than 350 g/L.

2. Shellacs, Clear: VOC not more than 730 g/L.

3. Stains: VOC not more than 250 g/L.

4. Primers, Sealers, and Undercoaters: 200 g/L.

D. Low-Emitting Materials: Interior stains and finishes shall comply with the testing and product requirements of the California Department of Health Services' "Standard Practice for the Testing of Volatile Organic Emissions from Various Sources Using Small-Scale Environmental Chambers."

E. Stain Colors: As selected by Architect from manufacturer's full range.

2.03 WOOD FILLERS

A. Wood Filler Paste: MPI #91.

2.04 PRIMERS AND SEALERS

A. Provide all primer, sealants, and coating products used in any individual system from the same manufacturer, no exceptions.

2.05 STAINS

A. Provide all stain and varnish products used in any individual system from the same manufacturer, no

exceptions.

B. Stain, Semi-Transparent, for Interior Wood: MPI #90.

C. Stain, Semi-Transparent, for Exterior Wood: MPI #156.

2.06 WATER-BASED VARNISHES

A. Varnish, Water Based, Clear, Eggshell (Gloss Level 3): MPI #181.

B. Varnish, Water Based, Clear, Satin (Gloss Level 4): MPI #128.

C. Varnish, Water Based, Clear, Semi-Gloss (Gloss Level 5): MPI #129.

D. Varnish, Water Based, Clear, Gloss (Gloss Level 6): MPI #130.

2.07 POLYURETHANE VARNISHES

A. Varnish, Polyurethane, Moisture-Cured, Flat (Gloss Level 1): MPI #71.

B. Varnish, Polyurethane, Moisture-Cured, Gloss (Gloss Level 6): MPI #31.

2.08 SOURCE QUALITY CONTROL

A. Testing of Materials: Owner reserves the right to invoke the following procedure:

1. Owner will engage the services of a qualified testing agency to sample wood finishing materials. Contractor will be notified in advance and may be present when samples are taken. If materials have already been delivered to Project site, samples may be taken at Project site. Samples will be identified, sealed, and certified by testing agency.

2. Testing agency will perform tests for compliance with product requirements.

3. Owner may direct Contractor to stop applying wood finishes if test results show materials being used do not comply with product requirements. Contractor shall remove noncomplying materials from Project site, pay for testing, and refinish surfaces finished with rejected materials. Contractor will be required to remove rejected materials from previously finished surfaces before refinishing with complying materials if the two finishes are incompatible or produce results that, in the opinion of the Architect, are aesthetically unacceptable.

PART 3 - EXECUTION

3.01 EXAMINATION

A. Examine substrates and conditions, with Applicator present, for compliance with requirements for maximum moisture content and other conditions affecting performance of the Work.

B. Maximum Moisture Content of Exterior Wood Substrates: 15 percent, when measured with an electronic moisture meter.

C. Maximum Moisture Content of Interior Wood Substrates: 15 percent, when measured with an electronic moisture meter.

D. Verify suitability of substrates, including surface conditions and compatibility with existing finishes and primers.

E. Proceed with finish application only after unsatisfactory conditions have been corrected.

1. Beginning finish application constitutes Contractor's acceptance of substrates and conditions.

3.02 PREPARATION

A. Comply with manufacturer's written instructions and recommendations in "MPI Architectural Painting Specification Manual" applicable to substrates indicated.

B. Remove hardware, covers, plates, and similar items already in place that are removable. If removal is impractical or impossible because of size or weight of item, provide surface-applied protection before surface preparation and finishing.

1. After completing finishing operations, use workers skilled in the trades involved to reinstall items that were removed. Remove surface-applied protection if any.

C. Clean and prepare surfaces to be finished according to manufacturer's written instructions for each particular substrate condition and as specified.

1. Remove dust, dirt, oil, and grease by washing with a detergent solution; rinse thoroughly with clean water and allow to dry. Remove grade stamps and pencil marks by sanding lightly. Remove loose wood fibers by brushing.

2. Remove mildew by scrubbing with a commercial wash formulated for mildew removal and as recommended by stain manufacturer.

D. Interior Wood Substrates:

1. Scrape and clean knots, and apply coat of knot sealer before applying primer.
2. Apply wood filler paste to open-grain woods, as defined in "MPI Architectural Painting Specification Manual," to produce smooth, glasslike finish.
3. Sand surfaces that will be exposed to view and dust off.
4. After priming, fill holes and imperfections in the finish surfaces with putty or plastic wood filler. Sand smooth when dried.

3.03 APPLICATION

A. Apply finishes according to manufacturer's written instructions and recommendations in "MPI Architectural Painting Specification Manual."
1. Use applicators and techniques suited for finish and substrate indicated.
2. Finish surfaces behind movable equipment and furniture same as similar exposed surfaces.
3. Do not apply finishes over labels of independent testing agencies or equipment name, identification, performance rating, or nomenclature plates.

B. Apply finishes to produce surface films without cloudiness, holidays, lap marks, brush marks, runs, ropiness, or other surface imperfections.

3.04 CLEANING AND PROTECTION

A. At end of each workday, remove rubbish, empty cans, rags, and other discarded materials from Project site.

B. After completing finish application, clean spattered surfaces. Remove spattered materials by washing, scraping, or other methods. Do not scratch or damage adjacent finished surfaces.

C. Protect work of other trades against damage from finish application. Correct damage by cleaning, repairing, replacing, and refinishing, as approved by Architect, and leave in an undamaged condition.

D. At completion of construction activities of other trades, touch up and restore damaged or defaced finished wood surfaces.

3.05 INTERIOR WOOD-FINISH-SYSTEM SCHEDULE

A. Wood substrates, nontraffic surfaces, including wood trim architectural woodwork doors windows wood-based panel products glued-laminated construction exposed joists exposed beams.
1. Semitransparent Stain System:
a. Prime Coat: Stain, semi-transparent, matching topcoat.
b. Topcoat: Stain, semi-transparent, for interior wood, MPI #90.

END OF SECTION

PART 1 - GENERAL

1.01 RELATED DOCUMENTS

A. Drawings and general provisions of the Contract, including General and Supplementary Conditions and Division 01 Specification Sections, apply to this Section.

1.02 SUMMARY

A. Section Includes:

1. Panel signs.

a. Room-identification signs.

3. Building identification signs.

4. Plaque.

B. Related Requirements:

1. Section 14 21 00Electric Traction Elevators for code-required conveying equipment signage.

1.03 DEFINITIONS

A. Accessible: In accordance with the accessibility standard.

1.04 REFERENCE STANDARDS

A. 36 CFR 1191 -Americans with Disabilities Act Accessibility Guidelines for Buildings and Facilities; Final Rule; current edition; (ADA Standards for Accessible Design).

B. ANSI/ICC A117.1 -American National Standard for Accessible and Usable Buildings and Facilities; International Code Council.

C. ATBCB ADAAG -Americans with Disabilities Act Accessibility Guidelines.

1.05 SUBMITTALS

A. Product Data: Manufacturer's printed product literature for each type of sign, indicating sign styles, font, foreground and background colors, locations, overall dimensions of each sign.

B. Shop Drawings: For panel signs.

1. Include fabrication and installation details and attachments to other work.

2. Show sign mounting heights, locations of supplementary supports to be provided by others, and accessories.

3. Show message list, typestyles, graphic elements, and layout for each sign at least half size scale.

C. Samples for Initial Selection: For each type of sign assembly.

1. Include representative Samples of available typestyles and graphic symbols.

D. Samples for Verification: For each type of sign assembly showing all components and with the required finish(es), in manufacturer's standard size unless otherwise indicated and as follows:

1. Panel Signs: Not less than 12 inches (300 mm) square, including corner.

2. Room-Identification Signs: Full-size Sample.

E. Signage Schedule: Provide information sufficient to completely define each sign for fabrication, including room number, room name, other text to be applied, sign and letter sizes, fonts, and colors.

1. When room numbers to appear on signs differ from those on the drawings, include the drawing room number on schedule.

2. When content of signs is indicated to be determined later, request such information from Owner through Architect at least 2 months prior to start of fabrication; upon request, submit preliminary schedule.

3. Submit for approval by Owner through Architect prior to fabrication.

F. Manufacturer's Installation Instructions: Include installation templates and attachment devices.

G. Maintenance Data: For signs to include in maintenance manuals.

1.06 QUALITY ASSURANCE

A. Installer Qualifications: An entity that employs installers and supervisors who are trained and approved by manufacturer.

1.07 DELIVERY, STORAGE, AND HANDLING

A. Package signs as required to prevent damage before installation.

B. Package room and door signs in sequential order of installation, labeled by floor or building.

C. Store tape adhesive at normal room temperature.

1.08 FIELD CONDITIONS

A. Field Measurements: Verify locations of anchorage devices embedded in permanent construction by other installers by field measurements before fabrication, and indicate measurements on Shop Drawings.

B. Do not install tape adhesive when ambient temperature is lower than recommended by manufacturer.

1.09 WARRANTY

A. Special Warranty: Manufacturer agrees to repair or replace components of signs that fail in materials or workmanship within specified warranty period.

1. Failures include, but are not limited to, the following:

a. Deterioration of finishes beyond normal weathering.

b. Deterioration of embedded graphic image.

c. Separation or delamination of sheet materials and components.

2. Warranty Period: Five years from date of Substantial Completion.

PART 2 - PRODUCTS

2.01 MANUFACTURERS

A. Panel Signs:

1. Accent Signage Systems, Inc.; www.accentsignage.com.

2 ASI Signage Innovations; www.asisignage.com.

3. Best Sign Systems, Inc; www.bestsigns.com.

4. Mohawk Sign Systems, Inc.; www.mohawksign.com.

5. Seton Identification Products; www.seton.com/aec.

6. Signs of Success; www.signsuccess.com.

B. Plaques:

1. Cosco Industries, Cast Bronze; www.coscoarchitecturalsigns.com.

2. A.R.K.Ramos Signage Systems; www.arkramos.com.

3. ASI Signage Innovations; www.asisignage.com.

C. Dimensional Letter Signs:

1. Cosco Industries, Cast Aluminum; www.coscoarchitecturalsigns.com.

2. A.R.K.Ramos Signage Systems; www.arkramos.com.

3. ASI Signage Innovations; www.asisignage.com.

D. Substitutions: See Section 01 25 00 - Substitutions Procedures.

2.02 SIGNAGE APPLICATIONS

A. Accessibility Compliance: All signs are required to comply with ADA Standards for Accessible Design and ANSI/ICC A117.1 and applicable building codes, unless otherwise indicated; in the event of conflicting requirements, comply with the most comprehensive and specific requirements.

B. Room-identification signs: Provide a sign for every doorway, whether it has a door or not, not including corridors, lobbies, and similar open areas.

1. Sign Type: Flat signs with engraved panel media as specified.

2. Provide "tactile" signage, with letters raised minimum 1/32 inch and Grade II braille.

3. Character Height: 1 inch.

4. Sign Height: 3 inches, unless otherwise indicated.

5. Office Doors: Identify with room numbers to be determined later, not the numbers shown on the drawings.

6. Service Rooms: Identify with room names and numbers to be determined later, not those shown on the drawings.

7. Rest Rooms: Identify with pictograms, the names "MEN" and "WOMEN", and braille.

D. Building Identification Signs:

1. Use individual metal letters.
2. Mount on outside wall in location as indicated on drawings.

E. Plaque:

1. Mount on inside wall in location as directed.

2.03 SIGN TYPES

A. Panel Signs: Signage media without frame.

1. Edges: Square.
2. Corners: Square.
3. Wall Mounting of One-Sided Signs: Tape adhesive.
   a. Where mounting on glazing, provide blank backplate of same size, shape and color.

B. Color and Font: Unless otherwise indicated:

1. Character Font: As selected by Architect.
2. Character Case: Upper case only.
3. Background Color: As selected by Architect.
4. Character Color: Contrasting color.

2.04 TACTILE SIGNAGE MEDIA

A. Engraved Panels: Laminated colored plastic; engraved through face to expose core as background color:

1. Total Thickness: 1/8 inch.

B. Injection Molded Panels: One-piece acrylic plastic, with raised letters and braille.

1. Total Thickness: 1/8 inch.

2.05 PLAQUES

A. Metal Plaques:

1. Metal: Aluminum casting.
2. Product Base: A.R.K.Ramos, Cast Plaques.
3. Size and Content: Reference Drawings.
4. Border: 518
5. Finish: Echo Bronze
6. Texture: Pebble
7. Mounting: No. 3 (toggle bolt hollow wall).

2.06 DIMENSIONAL LETTERS

A. Metal Letters:

1. Metal: Aluminum casting.
2. Finish: Brushed, satin.
3. Product: Standard Cast Letters.
4. Letter Style: To be chosen from manufacturer's standard range of styles.
5. Letter Height: As indicated on the drawings.
6. Finish: Anodized aluminum.
7. Text: As indicated on the drawings.
8. Mounting: Concealed screws.

2.07 ACCESSORIES

A. Fasteners and Anchors: Manufacturer's standard as required for secure anchorage of signage, noncorrosive and compatible with each material joined, and complying with the following:

1. Use concealed fasteners and anchors unless indicated to be exposed: Stainless steel, galvanized steel, chrome plated, or other non-corroding metal.

B. Two-Face Tape: Manufacturer's standard high-bond, foam-core tape, 0.045 inch (1.14 mm) thick, with adhesive on both sides.

2.08 GENERAL FINISH REQUIREMENTS

A. Protect mechanical finishes on exposed surfaces from damage by applying a strippable, temporary protective covering before shipping.

B. Appearance of Finished Work: Noticeable variations in same piece are not acceptable. Variations in appearance of adjoining components are acceptable if they are within the range of approved Samples and are assembled or installed to minimize contrast.

PART 3 - EXECUTION

3.01 EXAMINATION

A. Examine substrates, areas, and conditions, with Installer present, for compliance with requirements for installation tolerances and other conditions affecting performance of signage work.

B. Verify that sign-support surfaces are within tolerances to accommodate signs without gaps or irregularities between backs of signs and support surfaces unless otherwise indicated.

C. Verify that anchor inserts are correctly sized and located to accommodate signs.

D. Proceed with installation only after unsatisfactory conditions have been corrected.

3.02 INSTALLATION

A. General: Install signs using mounting methods indicated and according to manufacturer's written instructions.

1. Install signs level, plumb, true to line, and at locations and heights indicated, with sign surfaces free of distortion and other defects in appearance.
2. Install signs so they do not protrude or obstruct according to the accessibility standard.
3. Before installation, verify that sign surfaces are clean and free of materials or debris that would impair installation.
4. Corrosion Protection: Coat concealed surfaces of exterior aluminum in contact with grout, concrete, masonry, wood, or dissimilar metals, with a heavy coat of bituminous paint.

B. Locate signs where indicated:

1. Room-Identification Signs: Locate on wall or glass at latch side of door with centerline of sign at 60 inches above finished floor.
2. If no location is indicated obtain Owner's instructions.

C. Mounting Methods:

1. Concealed Studs: Using a template, drill holes in substrate aligning with studs on back of sign. Remove loose debris from hole and substrate surface.
    a. Masonry Substrates: Fill holes with adhesive. Leave recess space in hole for displaced adhesive. Place sign in position and push until flush to surface, embedding studs in holes. Temporarily support sign in position until adhesive fully sets.
    b. Thin or Hollow Surfaces: Place sign in position and flush to surface, install washers and nuts on studs projecting through opposite side of surface, and tighten.
2. Two-Face Tape: Mount signs to smooth, nonporous surface. Clean bond-breaking materials from substrate surface and remove loose debris. Apply tape strips symmetrically to back of sign and of suitable quantity to support weight of sign without slippage. Keep strips away from edges to prevent visibility at sign edges. Place sign in position, and push to engage tape adhesive.
3. Signs on Glass: provide matching opaque plate on opposite side of glass to conceal mounting materials.

3.03 ADJUSTING AND CLEANING

A. Remove and replace damaged or deformed signs and signs that do not comply with specified requirements. Replace signs with damaged or deteriorated finishes or components that cannot be successfully repaired by finish touchup or similar minor repair procedures.

B. Remove temporary protective coverings and strippable films as signs are installed.

C. On completion of installation, clean exposed surfaces of signs according to manufacturer's written instructions, and touch up minor nicks and abrasions in finish. Maintain signs in a clean condition during construction and protect from damage until acceptance by Owner.

D. Protect from damage until Substantial Completion; repair or replace damage items.

END OF SECTION

DIVISION 10 - SPECIALTIES

TOILET COMPARTMENTS SECTION 10 21 13

PART 1 - GENERAL

1.01 RELATED DOCUMENTS

A. Drawings and general provisions of the Contract, including General and Supplementary Conditions and Division 01 Specification Sections, apply to this Section.

1.02 SUMMARY

A. Section Includes:

1. Phenolic-core toilet compartments configured as toilet enclosures and urinal screen.

B. Related Sections:

1. Section 06 10 00 - Rough Carpentry for blocking and support of floor anchored compartments.
2. Section 10 28 13 - Toilet Accessories for grab bars and similar accessories.

1.03 REFERENCES

A. Americans with Disabilities (ADA) Standards for Accessible Design.

B. ANSI A117.1 - American National Standard for Buildings and Facilities - Providing Accessibility and Usability for Physically Handicapped People.

C. ASTM A167 - Stainless and Heat Resisting Chromium-Nickel Steel Plate, Sheet, and Strip.

D. ASTM E84 - Surface Burning Characteristics of Building Materials.

E. UFAS - Uniform Federal Accessibility Standards.

1.04 SUBMITTALS

A. Product Data: For each type of product indicated. Include construction details, material descriptions, dimensions of individual components and profiles, and finishes.

B. Shop Drawings: For toilet compartments. Include plans, elevations, sections, details, and attachments to other work.

1. Show locations of cutouts for compartment-mounted toilet accessories.
2. Show locations of reinforcements for compartment-mounted grab bars.
3. Show locations of centerlines of toilet fixtures.
4. Show overhead support or bracing locations.

C. Samples for Initial Selection: For each type of unit indicated. Include Samples of hardware and accessories involving material and color selection.

D. Samples for Verification: For the following products, in manufacturer's standard sizes unless otherwise indicated:

1. Each type of material, color, and finish required for units, prepared on 6-inch-(152-mm¬) square Samples of same thickness and material indicated for Work.
2. Each type of hardware and accessory.

E. Product Certificates: For each type of toilet compartment, from manufacturer.

F. Maintenance Data: For toilet compartments to include in maintenance manuals.

1.05 QUALITY ASSURANCE

A. Comply with requirements in GSA's CID-A-A-60003, "Partitions, Toilets, Complete."

B. Regulatory Requirements: Comply with applicable provisions in the U.S. Architectural & Transportation Barriers Compliance Board's "Americans with Disabilities Act (ADA) and Architectural Barriers Act (ABA) Accessibility Guidelines for Buildings and Facilities" and ICC/ANSI A117.1 for toilet compartments designated as accessible.

1.06 PROJECT CONDITIONS

A. Field Measurements: Verify actual locations of toilet fixtures, walls, columns, ceilings, and other construction contiguous with toilet compartments by field measurements before fabrication.

PART 2 - PRODUCTS

2.01 MATERIALS

A. Aluminum Castings: ASTM B 26/B 26M.

B. Aluminum Extrusions: ASTM B 221 (ASTM B 221M).

C. Brass Castings: ASTM B 584.

D. Brass Extrusions: ASTM B 455.

E. Zamac: ASTM B 86, commercial zinc-alloy die castings.

F. Adhesives: Manufacturer's standard product that complies with the testing and product requirements of the California Department of Health Services' "Standard Practice for the Testing of Volatile Organic Emissions from Various Sources Using Small-Scale Environmental Chambers."

2.02 PHENOLIC-CORE UNITS

A. Manufacturers: Subject to compliance with requirements, provide products by one of the following:

B. Basis-of-Design Product: Subject to compliance with requirements, provide General Partitions; 40 Series - Floor Supported with Headrail; General Partitions Mfg. Corp.; www.generalpartitions.com or comparable product by one of the following:

1. Accurate Partitions Corporation; www.accuratepartitions.com.
2. American Sanitary Partition Corporation; www.am-sanitary-partition.com.
3. Bobrick Washroom Equipment, Inc; 1082.67; www.bobrick.com.
4. Bradley Corporation; www.bradleycorp.com.
5. Global Steel Products Corp; www.globalpartitions.com.
6. Substitutions: See Section 01 25 00 -Substitution Procedures.

C. Toilet-Enclosure Style: Floor anchored/Overhead braced.

D. Urinal-Screen Style: Floor anchored/ Overhead braced.

E. Door, Panel, and Pilaster Construction: Color-thru phenolic panels. Solid phenolic core of multiple layers of phenolic resin impregnated kraft paper compressed under heat and pressure. Face with high pressure melamine sheet fusion welded to surface of core. Resistant to delamination, water, steam, corrosion, soaps, detergents, and mildew. Edges: Solid phenolic resin, to match face sheets radiused and polished. Fire Resistance per ASTM E84: Class A; 025 maximum flame spread and 100 maximum smoke development.

F. Pilaster Shoes: Fabricated from stainless-steel sheet, not less than 0.031-inch (0.79-mm) nominal thickness and 3 inches (76 mm) high, finished to match hardware.

G. Urinal-Screen Post: Manufacturer's standard post design of material matching the thickness and construction of pilasters; with shoe matching that on the pilaster.

H. Brackets (Fittings):

1. Full-Height (Continuous) Type: Manufacturer's standard design; stainless steel.

I. Phenolic-Panel Finish:

1. Color and Pattern: As indicated in drawings or selected by Architect from manufacturer's full range color to be determined.

2.03 ACCESSORIES

A. Hardware and Accessories: Manufacturer's standard design, heavy-duty operating hardware and accessories.

1. Material: Stainless steel.
2. Hinges: Manufacturer's standard continuous, cam type that swings to a closed or partially open position.
3. Latch and Keeper: Manufacturer's standard recessed latch unit designed for emergency access and with combination rubber-faced door strike and keeper. Provide units that comply with regulatory requirements for accessibility at compartments designated as accessible.
4. Coat Hook: Manufacturer's standard combination hook and rubber-tipped bumper, sized to prevent in-swinging door from hitting compartment-mounted accessories.
5. Door Bumper: Manufacturer's standard rubber-tipped bumper at out-swinging doors.
6. Door Pull: Manufacturer's standard unit at out-swinging doors that complies with regulatory requirements for accessibility. Provide units on both sides of doors at compartments designated as accessible.

B. Overhead Bracing: Manufacturer's standard continuous, extruded-aluminum head rail with antigrip profile and in manufacturer's standard finish.

C. Anchorages and Fasteners: Manufacturer's standard exposed fasteners of stainless steel to match the items they are securing, with theft-resistant-type heads. Provide sex-type bolts for through-bolt applications. For concealed anchors, use stainless steel fasteners.

2.04 FABRICATION

A. Overhead-Braced Units: Provide manufacturer's standard corrosion-resistant supports, leveling mechanism, and anchors at pilasters to suit floor conditions. Provide shoes at pilasters to conceal supports and leveling mechanism.

B. Urinal-Screen Posts: Provide manufacturer's standard corrosion-resistant anchoring assemblies with leveling adjustment at bottoms of posts. Provide shoes at posts to conceal anchorage.

C. Door Size and Swings: Unless otherwise indicated, provide 24-inch-(610-mm-) wide, in-swinging doors for standard toilet compartments and 36-inch-(914-mm-) wide, out-swinging doors with a minimum 32-inch-(813-mm-) wide, clear opening for compartments designated as accessible.

PART 3 - EXECUTION

3.01 INSTALLATION

A. General: Comply with manufacturer's written installation instructions. Install units rigid, straight, level, and plumb. Secure units in position with manufacturer's recommended anchoring devices.

1. Maximum Clearances:

a. Pilasters and Panels: 1/2 inch (13 mm).

b. Panels and Walls: 1 inch (25 mm).

B. Overhead-Braced Units: Secure pilasters to floor and level, plumb, and tighten. Set pilasters with anchors penetrating not less than 1-3/4 inches (44 mm) into structural floor unless otherwise indicated in manufacturer's written instructions. Secure continuous head rail to each pilaster with no fewer than two fasteners. Hang doors to align tops of doors with tops of panels, and adjust so tops of doors are parallel with overhead brace when doors are in closed position.

C. Urinal Screens: Attach with anchoring devices to suit supporting structure. Set units level and plumb, rigid, and secured to resist lateral impact.

3.02 ADJUSTING

A. Hardware Adjustment: Adjust and lubricate hardware according to hardware manufacturer's written instructions for proper operation. Set hinges on in-swinging doors to hold doors open approximately 30 degrees from closed position when unlatched. Set hinges on out-swinging doors[and doors in entrance screens] to return doors to fully closed position.

END OF SECTION

----------THIS PAGE LEFT INTENTIONALLY BLANK----------

PART 1 - GENERAL

1.01 RELATED DOCUMENTS

A. Drawings and general provisions of the Contract, including General and Supplementary Conditions and Division 01 Specification Sections, apply to this Section.

1.02 SUMMARY

A. Section Includes:

1. Surface mounted Corner guards.

1.03 SUBMITTALS

A. Product Data: For each type of product indicated including mounting instructions.

B. Shop Drawings: Show locations of each item and installation details. Provide elevations of non-standard conditions.

C. Samples: Provide 12 inch long sample.

PART 2 - PRODUCTS

2.01 CORNER GUARDS

A. Provide 2 inch wide 304 brushed stainless steel corner guards at all gypsum board outside Corners. Corner guards to extend from top of base to 4'-"0" above finish floor, unless noted otherwise.

2.02 ACCESSORIES

A. Provide appropriate fasteners and accessories as required to properly complete Corner guard installation.

PART 3 - EXECUTION

3.01 EXAMINATION

A. Verify that walls are in proper condition to receive installation of corner guards.

1. Surface mounted Corner guards must be installed after wall finishes have been completed.

3.02 INSTALLATION

A. Install corner guards at all gypsum board finished outside Corners unless otherwise indicated.

B. Install corner guards in full compliance with manufacturer's installation instructions.

3.03 ADJUSTING AND CLEANING

A. Verify that Corner guards are plumb and rigidly secured to substrate and make any adjustments as required.

B. Clean Corner guards and immediate areas of installation, using materials and methods recommended by manufacturer. Remove from project site packaging and debris caused by installation.

END OF SECTION

----------THIS PAGE LEFT INTENTIONALLY BLANK----------

PART 1 - GENERAL

1.01 RELATED DOCUMENTS

A. Drawings and general provisions of the Contract, including General and Supplementary Conditions and Division 01 Specification Sections, apply to this Section.

1.02 SUMMARY

A. Section Includes:

1. Toilet accessories.
2. Underlavatory guards.
3. Custodial accessories.

1.03 SUBMITTALS

A. Product Data: For each type of product indicated.

B. Product Schedule: Indicating types, quantities, sizes, and installation locations by room of each accessory required.

1. Identify locations using room designations indicated.
2. Identify products using designations indicated.

C. Maintenance data.

1.04 QUALITY ASSURANCE

A. Source Limitations: For products listed together in the same Part 2 articles, obtain products from single source from single manufacturer.

1.05 COORDINATION

A. Coordinate accessory locations with other work to prevent interference with clearances required for access by people with disabilities, and for proper installation, adjustment, operation, cleaning, and servicing of accessories.

B. Deliver inserts and anchoring devices set into concrete or masonry as required to prevent delaying the Work.

PART 2 - PRODUCTS

2.01 TOILET ACCESSORIES

A. Manufacturers: To establish a standard of quality, design and function desired, manufacture has been based upon Bradley Corp. Subject to compliance with requirements, provide the named products or comparable products by one of the following manufacturer's:

1. Mt. Laurel
2. American Specialties, Inc.
3. A & J Washroom Accessories, Inc.
4. Bobrick Washroom Equipment, Inc.
5. Tubular Specialties Manufacturing, Inc.
6. Other manufacturers will be considered for approval by the Architect upon receipt of adequate supporting data

B. Toilet Tissue Roll Dispenser: Model B-4388

C. Combination Paper Towel Dispenser/Waste Receptacle: Model B-36903

D. Feminine Napkin Disposal: Model 4737-10

E. Liquid-Soap Dispenser: Model 6A00-11

F. Grab Bars:

1. Mounting: Flanges with concealed fasteners.
2. Material: Stainless steel, 0.05 inch (1.3 mm) thick.
   a. Finish: Smooth, No. 4 finish (satin) on ends and slip-resistant texture in grip area.
3. Outside Diameter: 1-1/4 inches (32 mm).

4. Configuration and Length: As indicated on Drawings.

G. Mirror Unit: Model 747F Frosted

2.02 UNDERLAVATORY GUARDS

A. Basis-of-Design Product: Subject to compliance with requirements, provide product indicated on Drawings or comparable product by the following:

1. Truebro by IPS Corporation.

2. Plumberex Specialty Products, Inc.

a. Description: Insulating pipe covering for supply and drain piping assemblies that prevent direct contact with and bums from piping; allow service access without removing coverings.

b. Material and Finish: Antimicrobial, molded plastic, white.

2.03 CUSTODIAL ACCESSORIES

A. Mop Holder / Shelf:

1. Basis-of-Design Product: Bobrick B-224 x 36.

2. Description: Four anti-slip mop holders with spring loaded rubber cam grips.

3. Shelf: 18 gauge stainless steel.

4. Material and Finish: 304 Brushed stainless steel (satin).

5. Provide one at each janitor closet whether indicated or not.

PART 3 - EXECUTION

3.1 INSTALLATION

A. Install accessories according to manufacturers' written instructions~ using fasteners appropriate to substrate indicated and recommended by unit manufacturer. Install units level, plumb, and firmly anchored in locations and at heights indicated.

B Grab Bars: Install to withstand a downward load of at least 250 Ibf, when tested according to ASTM F 446.

3.02 ADJUSTING AND CLEANING

A. Adjust accessories for unencumbered, smooth operation. Replace damaged or defective items.

B. Remove temporary labels and protective coatings.

C. Clean and polish exposed surfaces according to manufacturer's written recommendations.

END OF SECTION

PART 1 - GENERAL

1.01 RELATED DOCUMENTS

A. Drawings and general provisions of the Contract, including General and Supplementary Conditions and Division 01 Specification Sections, apply to this Section.

1.02 SUMMARY

A. Section includes:

1. Cabinets for fire extinguishers.

1.03 SUBMITTALS

A. See Section 01 33 00 - Submittals Procedures, for submittal procedures.

B. Shop Drawings: Indicate cabinet physical dimensions, rough-in measurements for recessed cabinets, wall bracket mounted measurements, and location.

C. Manufacturer's Installation Instructions: Indicate special criteria and wall opening coordination requirements.

D. Manufacturer's Certificate: Certify that products meet or exceed specified requirements.

1.04 COORDINATION

A. Coordinate size of fire protection cabinets to ensure that type and capacity of fire extinguishers indicated are accommodated.

B. Coordinate sizes and locations of fire protection cabinets with wall depths.

1.05 QUALITY ASSURANCE

A. Fire-Rated, Fire Protection Cabinets: Listed and labeled to comply with requirements in ASTM E 814 for fire-resistance rating of walls where they are installed.

PART 2 - PRODUCTS

2.01 MATERIALS

A. Cold-Rolled Steel Sheet: ASTM A1008/A1008M, Commercial Steel (CS), Type B.

B. Tempered Float Glass: ASTM C 1048, Kind FT, Condition A, Type I, Quality q3, 3 mm thick, Class 1 (clear).

2.02 FIRE PROTECTION CABINET

A. Fire Rated: Listed and labeled in accordance with ASTM E814 requirements for fire resistance rating of walls where being installed.

B. Cabinet:

1. Subject to compliance with requirements, provide product of J. L. Industries, Inc.
2. COSMOPOLITAN SERIES 2032V17 or a comparable product approved by the Architect by one of the following:
    a. Ansul, a Tyco Business: www.ansul.com.
    b. Kidde, a unit of United Technologies Corp: www.kidde.com.
    c. Larsen's Manufacturing Co: www.larsensmfg.com.
    d. Nystrom, Inc: www.nystrom.com/sle.
    e. Pyro-Chem, a Tyco Business: www.pyrochem.com.
    f. Strike First Corporation of America: www.strikefirstusa.com/#sle.
    g. Substitutions: See Section 01 25 00 - Substitutions Procedures.
3. Construction:
    a. Non rated: Cold rolled steel with white powder-coat finish; 28 x 13 x 4 1/8 inch rough opening dimensions.
    b. Rated: Cold rolled steel with white powder-coat finish; 29 5/16 x 14 5/16 x 5 1/8 inch rough opening dimensions.
    c. Cabinet Color: White powder-coat.
4. Door and Trim: Stainless steel; flush doors with 5/8 inch (15.88 mm) door stop attached by

continuous hinge and equipped with black ABS recessed pull with roller catch.

a. Finish: Factory-applied ground and polished finish.

1). Standard Finish: #4 directional satin finish.

b. Trim Style and Depth:

1). Semirecessed Cabinet: 4” rolled edge with recessed pull.

5. Door Hardware: Manufacturer's standard door-operating hardware of proper type for cabinet type, trim style, and door material and style indicated.

2.03 FABRICATION

A. Fire Protection Cabinets: Provide manufacturer's standard box (tub) in color indicated, with trim, frame, door, and hardware to suit cabinet type, trim style, and door style indicated. Miter and weld joints and grind smooth.

PART 3 - EXECUTION

3.01 EXAMINATION

A. Examine walls and partitions for suitable framing depth and blocking where semirecessed cabinets will be installed.

B. Proceed with installation only after unsatisfactory conditions have been corrected.

3.02 PREPARATION

A. Prepare recesses for recessed fire protection cabinets as required by type and size of cabinet and trim style.

3.03 INSTALLATION

A. Examine walls and partitions for suitable framing depth and blocking where cabinets will be installed and prepare recesses as required by type and size of cabinet and trim style.

B. Install fire protection cabinets in locations and at mounting heights indicated.

C. Fire Protection Cabinets: Fasten cabinets to structure, square and plumb.

D. Adjust fire protection cabinet doors to operate easily without binding.

E. Replace fire protection cabinets that have been damaged or have deteriorated beyond successful repair by finish touchup or similar minor repair procedures.

3.04 ADJUSTING AND CLEANING

A. Remove temporary protective coverings and strippable films, if any, as fire protection cabinets are installed unless otherwise indicated in manufacturer's written installation instructions.

B. Adjust fire protection cabinet doors to operate easily without binding. Verify that integral locking devices operate properly.

C. On completion of fire protection cabinet installation, clean interior and exterior surfaces as recommended by manufacturer.

D. Touch up marred finishes, or replace fire protection cabinets that cannot be restored to factory-finished appearance. Use only materials and procedures recommended or furnished by fire protection cabinet and mounting bracket manufacturers.

E. Replace fire protection cabinets that have been damaged or have deteriorated beyond successful repair by finish touchup or similar minor repair procedures.

END OF SECTION

PART 1 - GENERAL

1.01 RELATED DOCUMENTS

A. Drawings and general provisions of the Contract, including General and Supplementary Conditions and Division 01 Specification Sections, apply to this Section.

1.02 SUMMARY

A. Section includes portable, hand-carried fire extinguishers and mounting brackets for fire extinguishers.

1.03 SUBMITTALS

A. Product Data: For each type of product indicated.

1.04 QUALITY ASSURANCE

A. NFPA Compliance: Fabricate and label fire extinguishers to comply with NFPA 10, "Portable Fire Extinguishers."

B. Fire Extinguishers: Listed and labeled for type, rating, and classification by an independent testing agency acceptable to authorities having jurisdiction.

C. Coordinate type and capacity of fire extinguishers with fire protection cabinets to ensure fit and function.

1.05 WARRANTY

A. Special Warranty: Manufacturer's standard form in which manufacturer agrees to repair or replace fire extinguishers that fail in materials or workmanship within specified warranty period.

1. Failures include, but are not limited to, the following:
   a. Failure of hydrostatic test according to NFPA 10.
   b. Faulty operation of valves or release levers.
2. Warranty Period: Six years from date of Substantial Completion.

PART 2 - PRODUCTS

2.01 MANUFACTURERS

A. Ansul, a Tyco Business: www.ansul.com.

B. Kidde, a unit of United Technologies Corp: www.kidde.com.

C. Nystrom, Inc: www.nystrom.com.

D. Pyro-Chem, a Tyco Business: www.pyrochem.com.

E. Strike First Corporation of America: www.strikefirstusa.com/#sle.

F. JL Industries: www.activarcpg.com/jl-industries.

G. Substitutions: See Section 01 25 00 - Substitutions Procedures.

2.01 PORTABLE, HAND-CARRIED FIRE EXTINGUISHERS

A. Products:

1. Provide extinguishers labeled by UL (DIR) or FM (AG) for purpose specified and as indicated.
2. Multipurpose Dry Chemical Type Fire Extinguishers: Carbon steel tank, with pressure gage.
   a. Stored Pressure Operated: Deep Drawn.
   b. Class: A:B:C type.
   c. Size: 10 pound.
   d. Finish: Baked polyester powder coat, red color.
3. Wet Chemical (Class K kitchen) fire extinguisher
   a. Factory filled and pressurized
   b. Size: 6L
   c. Finish: Polished stainless steel

PART 3 - EXECUTION

3.01 INSTALLATION

A. Examine fire extinguishers for proper charging and tagging.

1. Remove and replace damaged, defective, or undercharged fire extinguishers.

B. Install fire extinguishers and mounting brackets in locations indicated and in compliance with requirements of authorities having jurisdiction.

END OF SECTION

PART 1 - GENERAL

1.01 RELATED DOCUMENTS

A. Drawings and general provisions of the Contract, including General and Supplementary Conditions and Division 01 Specification Sections, apply to this Section.

1.02 SECTION INCLUDES

A. Metal Awnings and Canopies of the following types:

1. Standard Canopy. (LFS-FLA)

1.03 RELATED SECTIONS

A. Section 05 12 00 - Structural Steel.

B. Section 05 40 00 - Cold-Formed Metal Framing.

C. Section 07 62 00 - Sheet Metal Flashing and Trim.

1.04 SUBMITTALS

A. Submit under provisions of Section 01300.

B. Product Data:

1. Manufacturer's data sheets on each product to be used.
2. Preparation instructions and recommendations.
3. Storage and handling requirements and recommendations.
4. Typical installation methods.

C. Verification Samples: Two representative units of each type, size, pattern and color.

D. Shop Drawings: Include details of materials, construction and finish. Include relationship with adjacent construction.

1.05 QUALITY ASSURANCE

A. Manufacturer Qualifications: Company specializing in manufacturing products specified in this section with a minimum ten years documented experience.

B Installer Qualifications: Company specializing in performing Work of this section with minimum five years documented experience with projects of similar scope and complexity, and approved by Manufacturer.

C. Source Limitations: Provide each type of product from a single manufacturing source to ensure uniformity.

D. Mock-Up: Construct a mock-up with actual materials in sufficient time for Architect’s review and to not delay construction progress. Locate mock-up as acceptable to Architect and provide temporary foundations and support.

1. Intent of mock-up is to demonstrate quality of workmanship and visual appearance.
2. If mock-up is not acceptable, rebuild mock-up until satisfactory results are achieved.
3. Retain mock-up during construction as a standard for comparison with completed work.
4. Do not alter or remove mock-up until work is completed or removal is authorized.

1.06 PRE-INSTALLATION CONFERENCE

A. Convene a conference approximately two weeks before scheduled commencement of the Work. Attendees shall include Architect, Contractor and trades involved. Agenda shall include schedule, responsibilities, critical path items and approvals.

1.07 DELIVERY, STORAGE, AND HANDLING

A. Store and handle in strict compliance with manufacturer's written instructions and recommendations.

B. Protect from damage due to weather, excessive temperature, and construction operations.

1.08 PROJECT CONDITIONS

A. Maintain environmental conditions (temperature, humidity, and ventilation) within limits recommended by manufacturer for optimum results. Do not install products under environmental conditions outside manufacturer's recommended limits.

1.09 WARRANTY

A. Manufacturer's Warranty: Aluminum frames are warranted against defects in workmanship for five (5) years from date of installation.

PART 2 - PRODUCTS

2.01 MANUFACTURERS

A. Acceptable Manufacturer: Lawrence Fabric and Metal Structures Inc., which is located at: 3509 TreeCourt Industrial Blvd.; St. Louis, MO 63122; Phone: 636-861-0100; Email: sales@lawrencefabric.com; Web: lawrencefabric.com Click Here for more information.

B. Substitutions:

1. Requests for substitutions will be considered in accordance with provisions of Section 01 25 00.

2.02 METAL AWNINGS AND CANOPIES

A. Performance and Design Requirements:

1. Standards Compliance: Comply with local building codes.

B. Standard Canopy, Basis of Design: LFS-FLA Canopy; as manufactured by Lawrence Fabric and Metal Structures Inc.

1. Material: Extruded aluminum, alloy 6063-T6.
2. Fabrication Method: Welded and mechanically fastened
3. Fascia: G-style gutter fascia
   a. Welded as one piece or in sections as required for width of canopy.
   b. Profile: 6 inches
4. Decking: Aluminum interlocking pan.
   a. Profile: Profile: 3x6 Inch
5. Water Dispersal:
   a. Include Sleeve to Accommodate Downspout
6. Support: Hanger rods:
   a. 1.0 Inch Aluminum Rod
7. Finishes
   a. AAMA 2604 Compliant Powder Coat Finish: 5-Year Warranty

2.03 DOWNLOAD DRAWINGS

A. CAD (https://www.lawrencefabric.com/Assets/LFS-FLA.dwg)

B. PDF (https://www.lawrencefabric.com/Assets/LFS-FLA%20METAL%20CANOPY.pdf)

C All Files (https://www.lawrencefabric.com/Assets/fwlfsflametalcanopy.zip)

PART 3 - EXECUTION

3.01 EXAMINATION

A. Do not begin installation until substrates have been properly constructed and prepared.

B. Confirm dimensions and elevations.

C. Verify that wall structure can support canopy loads.

D. If substrate preparation is the responsibility of another installer, notify Architect in writing of unsatisfactory preparation before proceeding.

3.02 PREPARATION

A. Clean surfaces thoroughly prior to installation.

B. Prepare surfaces using the methods recommended by the manufacturer for achieving the best result for the substrate under the project conditions.

3.03 INSTALLATION

A. Install in accordance with manufacturer's instructions, approved submittals, and in proper relationship with adjacent construction.

3.04 FIELD QUALITY CONTROL

A. Field Inspection: Coordinate field inspection in accordance with appropriate sections in Division 01.

3.05 CLEANING AND PROTECTION

A. Clean products in accordance with the manufacturer's recommendations.

B. Touch-up, repair or replace damaged products before Substantial Completion.

END OF SECTION

----------THIS PAGE LEFT INTENTIONALLY BLANK----------

PART 1 - GENERAL

1.01 RELATED DOCUMENTS

A. Drawings and general provisions of the Contract, including General and Supplementary Conditions and Division 01 Specification Sections, apply to this Section.

1.02 SECTION INCLUDES

A. Metal building systems including:

1. Metal framing components.
2. Metal wall panels and trim.
3. Metal roof panels and trim.
4. Metal building accessories.

1.03 RELATED SECTIONS:

A. Section 03 30 00 - Cast-In-Place Concrete: Concrete slabs and footings.

B. Section 05 12 00 - Structural Steel Framing: Wall and roof framing.

C. Section 05 40 00 - Cold-Formed Metal Framing: Metal partition wall framing.

D. Section 07 92 00 - Joint Sealants.

1.04 REFERENCES

(Current Edition at Date of Bid)

A. American Institute of Steel Construction (AISC):

1. AISC 360 - Specification for Structural Steel Buildings.
2. AISC 341 - AISC Seismic Provisions for Structural Steel Buildings.
3. AISC 303 - Code of Standard Practice for Steel Buildings and Bridges.

B. American Iron and Steel Institute (AISI):

1. AISI S100 - North American Specification for the Design of Cold-Formed Steel Structural Members.

C. American Welding Society (AWS)

1. AWS D1.1/D1.1M - Structural Welding Code - Steel.
2. AWS D1.3/D1.3M - Structural Welding Code - Sheet Steel.

D. American Society of Heating, Refrigeration and Air Conditioning Engineers (ASHRAE):

1. ASHRAE 90.1 - Energy Standard for Buildings Except Low-Rise Residential Buildings (I-P Edition).

E. ASTM International (ASTM):

1. ASTM A 6/A 6M - Standard Specification for General Requirements for Rolled Structural Steel Bars, Plates, Shapes, and Sheet Piling.
2. ASTM A 36/A 36M - Standard Specification for Carbon Structural Steel.
3. ASTM A 325 - Standard Specification for Structural Bolts, Steel, Heat-Treated, 120/105 ksi Minimum Tensile Strength.
4. ASTM A 475 - Standard Specification for Zinc-Coated Steel Wire Strand.
5. ASTM A 490 Standard Specification for Structural Bolts, Alloy Steel, Heat Treated, 150 ksi Minimum Tensile Strength
6. ASTM A 500/A 500M - Standard Specification for Cold-Formed Welded and Seamless Carbon Steel Structural Tubing in Rounds and Shapes.
7. ASTM A 529/A 529M - Standard Specification for High-Strength Carbon-Manganese Steel of Structural Quality.
8. ASTM A 563 - Standard Specification for Carbon and Alloy Steel Nuts.
9. ASTM A 572/A 572M - Standard Specification for High-Strength Low-Alloy Columbium-Vanadium Structural Steel.
10. ASTM A 653/A 653M - Standard Specification for Steel Sheet, Zinc-Coated (Galvanized) or Zinc-Iron Alloy-Coated (Galvannealed) by the Hot-Dip Process.

11. ASTM A 792/A 792M - Standard Specification for Steel Sheet, 55 Percent Aluminum- Zinc Alloy-Coated by Hot-Dip Process.
12. ASTM A 992/A 992M - Standard Specification for Structural Steel Shapes.
13. ASTM A 1011/A 1011M - Standard Specification for Steel, Sheet and Strip, Hot- Rolled, Carbon, Structural, High-Strength, Low-Alloy and High-Strength Low-Alloy with Improved Formability and Ultra-High Strength
14. ASTM A 1018/A 1018A - Standard Specification for Steel, Sheet and Strip, Heavy- Thickness Coils, Hot-Rolled, Carbon, Commercial, Drawing, Structural, High-Strength Low-Alloy, High-Strength Low-Alloy with Improved Formability, and Ultra-High Strength
15. ASTM C 518 - Standard Test Method for Steady-State Thermal Transmission Properties by Means of the Heat Flow Meter Apparatus.
16. ASTM C 1363 - Standard Test Method for Thermal Performance of Building Materials and Envelope Assemblies by Means of a Hot Box Apparatus.
17. ASTM D 635 - Standard Test Method for Rate of Burning and/or Extent and Time of Burning of Plastics in a Horizontal Position.
18. ASTM D 1003 - Standard Test Method for Haze and Luminous Transmittance of Transparent Plastics.
19. ASTM D 1494 - Standard Test Method for Diffuse Light Transmission Factor of Reinforced Plastics Panels.
20. ASTM D 1929 - Standard Test Method for Determining Ignition Temperature of Plastics.
21. ASTM D 2240 - Standard Test Method for Rubber Property—Durometer Hardness.
22. ASTM D 2244 - Standard Practice for Calculation of Color Tolerances and Color Differences from Instrumentally Measured Color Coordinates.
23. ASTM D 4214 - Standard Test Methods for Evaluating the Degree of Chalking of Exterior Paint Films.
24. ASTM E 84 - Standard Test Method for Surface Burning Characteristics of Building Materials.
25. ASTM E 72 - Standard Test Methods of Conducting Strength Tests of Panels for Building Construction.
26. ASTM E 283 - Standard Test Method for Determining Rate of Air Leakage through Exterior Windows, Curtain Walls, and Doors under Specified Pressure Differences Across Specimen.
27. ASTM E 331 - Standard Test Method for Water Penetration of Exterior Windows, Skylights, Doors, and Curtain Walls by Uniform Static Air Pressure Difference.
28. ASTM E 1592 - Standard Test Method for Structural Performance of Sheet Metal Roof and Siding Systems by Uniform Static Air Pressure Difference.
29. ASTM E 1646 - Standard Test Method for Water Penetration of Exterior Metal Roof Panel Systems by Uniform Static Air Pressure Difference.
30. ASTM E 1680 - Standard Test Method for Rate of Air Leakage Through Exterior Metal Roof Panel Systems.
31. ASTM E 1980 - Standard Practice for Calculating Solar Reflectance Index of Horizontal and Low-Sloped Opaque Surfaces.
32. ASTM F 436 - Standard Specification for Hardened Steel Washers
33. ASTM F 1941 - Standard Specification for Electrodeposited Coatings on Threaded Fasteners (Unified Inch Screw Threads (UN/UNR))

F. Cool Roof Rating Council (CRRC):
1. CRRC-1 Standard.
2. Product Rating Program Manual for CRRC-1.

G. Factory Mutual Approvals (FM Approvals):
1. FM 4471 - Approval Standard for Class 1 Panel Roofs.
2. FM 4880 - Approval Standard for Class 1 Fire Rating of Insulated Wall or Wall and Roof/Ceiling Panels, Interior Finish Materials or Coatings and Exterior Wall Systems.
3. FM 4881 - Approval Standard for Class 1 Exterior Wall Systems.

H. International Accreditation Service (IAS):
1. Accreditation Criteria 472 (AC472) - Accreditation Criteria for Inspection Programs for Manufacturers of Metal Building Systems.

I. Metal Building Manufacturers Association (MBMA):

1. Metal Building Systems Manual.

J. National Fenestration Rating Council (NFRC):

1. NFRC 100 - Procedure for Determining Fenestration Product U-factors.

2. NFRC 200 - Procedure for Determining Fenestration Product Solar Heat Gain Coefficient and Visible Transmittance at Normal Incidence.

K. National Fire Protection Association (NFPA):

1. NFPA 285 - Standard Fire Test Method for Evaluation of Fire Propagation Characteristics of Exterior Non-Load-Bearing Wall Assemblies Containing Combustible Components.

L. Research Council on Structural Connections (RCSC):

1. RCSC Specification for Structural Joints Using ASTM A 325 or A 490 Bolts.

M. Underwriters Laboratories (UL):

1. UL-580 - Tests for Uplift Resistance of Roof Assemblies.

2. UL-790 - Standard Test Methods for Fire Tests of Roof Coverings.

3. UL-2218 - Impact Resistance of Prepared Roof Covering Materials.

1.05 ADMINISTRATIVE REQUIREMENTS

A. Preinstallation Meeting: Prior to erection of framing, conduct preinstallation meeting at site attended by Owner, Architect, manufacturer's technical representative, inspection agency and related trade contractors.

B. Coordinate work of Division 07 Sections "Roof Specialties" and "Roof Accessories" and openings and penetrations and manufacturer's accessories with installation of metal panels.

1.06 DEFINITIONS

A. Traditional Metal Building System: Building system using either continuous or simple span "Z" purlins for support of roof covering material.

B. Long Bay System (LBS): Building system using simple span, cold-formed, open web purlins to support roof covering material.

C. Gable Symmetrical: Continuous frame building with ridge in center of building, consisting of tapered or straight columns and tapered or straight rafters. Sidewall girts may be continuous (by-passing columns) or simple span (flush in column line). Rafters may or may not have interior columns.

D. Gable Unsymmetrical: Continuous frame building with an off-center ridge, consisting of tapered or straight columns and tapered or straight rafters. Eave height and roof slope may differ on each side of ridge. Sidewall girts may be continuous (by-passing columns) or simple span (flush in column line). Rafters may or may not have interior columns.

E. Single Slope: Continuous frame building which does not contain ridge, but consists of one continuous slope from side to side. Building consists of straight or tapered columns and tapered or straight rafters. Sidewall girts may be continuous (by-passing columns) or simple span (flush in column line). Rafters may or may not have interior columns.

F. Lean-to (LT): Building extension, which does not contain ridge, but consists of one continuous slope from side to side, usually with same roof slope and girt design as building to which attached.

G. Roof Slope: Pitch expressed as inches of rise for each 12 inches (305 mm) of horizontal run.

H. Acrylic-Coated Galvalume: Aluminum-Zinc coated steel with a thin clear acrylic finish coating eliminating the need for roll-forming oil and reducing incidence of field marking by handling or foot traffic.

I. Building Eave Height: Nominal dimension measured from finished floor to top flange of eave strut.

J. Building Width: Measured from outside to outside of side wall secondary structural member.

K. Building Length: Measured from outside to outside of end wall secondary structural member.

L. Auxiliary Loads: Dynamic loads induced by cranes, conveyors, or material handling systems.

M. Collateral Loads: Weight of any non-moving equipment or material, such as ceilings, electrical or mechanical equipment, sprinkler systems, plumbing, or ceilings.

N. Dead Load: Actual weight of building system as supplied by manufacturer supported by given member.

O. Floor Live Loads: Loads induced on floor system by building occupants and possessions including but not limited to furniture and equipment.

P. Roof Live Loads: Loads produced by maintenance activities, rain, erection activities, and or movable or moving loads but not including wind, snow, seismic, crane, or dead loads.

Q. Roof Snow Loads: Gravity load induced by weight of snow or ice on roof, assumed to act on horizontal projection of roof.

R. Seismic Loads: Loads acting in any direction on structural system due to action of an earthquake.

S. Wind Loads: Loads on structure induced by forces of wind blowing from any horizontal direction.

1.07 DESIGN REQUIREMENTS

A. Governing Design Code: Structural design for the metal building system shall be performed by the manufacturer of the metal building system in accordance with the building code provided in the contract documents.

B. Design Basis:

1. Use standards, specifications, recommendations, findings, and interpretations of professionally recognized groups as basis for establishing design, drafting, fabrication, and quality criteria, practices, and tolerances, including the AISC Code of Standard Practice for Steel Buildings and Bridges.

2. Design structures in accordance with MBMA Practices and Manual including fabrication and erection tolerances.

3. Design structural mill sections and welded plate sections in accordance with AISC 360, ASD Method.

4. Design the lateral force resisting systems and related components for seismic loads in accordance with AISC 341.

5. Design cold-formed steel structural members and panels in accordance with AISI S- 100.

6. Design all bolted joints in accordance with RCSC Specification.

C. Design Loads:

1. In accordance with Contract Documents and manufacturer's standard design practices.

2. Design loads include dead loads, roof live loads, wind loads, seismic loads, collateral loads, auxiliary loads, floor live loads and applied or specified loads.

1.08 SUBMITTALS

A. Submittals for Review:

1. Shop Drawings:

a. Complete erection drawings with identification and assembly of building components.

b. Show anchor bolt settings, transverse cross-sections, sidewall, endwall, and roof framing, flashing and sheeting, and accessory installation details.

c. Bear seal and signature of Registered Professional Engineer responsible for metal building system design in accordance with state law.

2. Manufacturer installation manual showing:

a. Preparation instructions and recommendations.

b. Storage and handling requirements and recommendations.

c. Installation methods.

3. Structural Design Calculations: 2 sets sealed and signed by a professional engineer licensed in accordance with applicable state law.

4. Documentation including test reports supporting Thermal Transmission Coefficients (U-factors) and Solar Heat Gain Coefficients (SHGC; for non-opaque components only) of building envelope components specified in this section.

B. Samples:

1. Submit color chips showing manufacturer's full range of available colors and patterns for each finish product.

2. After color selection submit samples representing actual product, color, and patterns.

C. Quality Control Submittals:

1. IAS AC472 Certificate for each facility involved in the design and fabrication of the Metal Building System.

2. Certified Erector Certificate issued to the erector by the manufacturer.

3. Material Test Reports (MTR) for all steel material used in the manufacture of primary and secondary framing members, panels and bolts specified in this section and when required by ASTM A 6/A 6M

1.09 QUALITY ASSURANCE

A. Manufacturer and Fabricator Qualifications: Primary products furnished by single IAS AC472 accredited manufacturer/fabricator with minimum [5] [ ] years of experience.

B. Erector Qualifications:

1. Single installer with minimum [5] [ ] years of experience in installing products of same or similar type and scope.

2. Installer must be certified by the metal building manufacturer.

1.10 DELIVERY, STORAGE AND HANDLING

A. Store packaged products in original, unopened packaging until ready for installation.

B. Store and dispose of solvent-based materials and materials used with solvent-based materials in accordance with requirements of the authority having jurisdiction.

C. Protect steel products from weather as specified by manufacturer instructions.

1.11 PROJECT CONDITIONS

A. Do not install systems when temperature, humidity, or ventilation is outside of limits recommended by manufacturer.

1.12 WARRANTIES

A. Special Manufacturer's Warranty: On manufacturer's standard form, in which manufacturer agrees to repair or replace metal building system components that fail in materials and workmanship within one year from date of Substantial Completion.

B. Special Weathertightness Warranty: On manufacturer's standard form, in which manufacturer agrees to repair or replace metal building system components that fail to remain weathertight, including leaks, [without monetary limitation] [up to cost limitation of seven dollars ($7.00) per square foot of covered area] [up to cost limitation of fourteen dollars ($14.00) per square foot of covered area] within [5] [10] [15] [20] years from date of Substantial Completion.

C. Special Panel Finish Warranty: On Manufacturer's standard form, in which Manufacturer agrees to repair or replace metal panels that evidence deterioration of factory-applied finish within the specified number years from date of Substantial Completion, including:

1. Acrylic Coated Galvalume (Galvalume® Plus): Product will not rupture, fail structurally, or perforate within period of 20 years due to normal atmospheric corrosion.

2. Fluoropolymer Two-Coat System (PVDF):

a. Color fading in excess of 5 Hunter units per ASTM D 2244 for 25 years.

b. Failure of adhesion, peeling, checking, or cracking for 40 years.

3. Metallic Fluropolymer Two-Coat System (Metallic PVDF):

a. Chalking in excess of No. 6 rating per ASTM D 4214 for 25 years.

b. Failure of adhesion, peeling, checking, or cracking for 25 years.

4. Modified Silicone-Polyester Two-Coat System (SMP):

a. Color fading in excess of 5 Hunter units per ASTM D 2244, for vertical applications for 25 years.

b. Color fading in excess of 7 Hunter units per ASTM D 2244, for non- vertical applications for 25 years.

c. Failure of adhesion, peeling, checking, or cracking for 40 years.

PART 2 - PRODUCTS

2.01 MANUFACTURERS

A. Acceptable manufacturers include:

1. A&S Building Systems, www.a-s.com.

2. All-American Systems, www.allamericansys.com.

3. Ceco Building Systems,www.cecobuildings.com.

4. Garco Building Systems,www.garcobuildings.com.

5. Mesco Building Solutions, www.mescobuildingsolutions.com.

6. Mid-West Steel Building Company,www.midweststeel.com.

7. Robertson Buildings,www.robertsonbuildings.com.

8. Star Building Systems, www.starbuildings.com.
9. Metallic Building Company,www.metallic.com.

B. Substitutions: Under provisions of section 01 25 00.

2.02 MATERIALS

A. Primary Framing Steel:

1. Hot-rolled shapes: ASTM A 36 or ASTM A 992, minimum yield of 36 ksi (248 MPa) or 50 ksi (345 MPa).
2. Built-up sections:
   a. Webs:
      1). ASTM A 1011 or ASTM A1018, SS or HSLAS, Grade 55 (380) for webs 3/16 inch (4.76 mm) thick and thinner.
      2). ASTM A 572 Grade 50 (340) or 55 (380) for webs thicker than 3/16 inch (4.76 mm).
   b. Flanges: ASTM A 529 Grade 55 (380) or ASTM A 572 Grade 50 (340) or 55 (380).
3. Round tube: ASTM A 500, Grade B or C with minimum yield strength of 42 ksi (290 MPa).
4. Square and rectangular tube: ASTM A 500, Grade B or C, minimum yield strength of 42 ksi (290 MPa).
5. Cold-formed C sections: ASTM A 1011, Grade 55 (380), or ASTM A 653, Grade 55 (380).
6. X-bracing: ASTM A 529 or A 572 for rod bracing 36 ksi (248 MPa) or 50 ksi (345 MPa), ASTM A 36 for angle bracing or ASTM A 475 for cable bracing.

B. Secondary Framing Steel:

1. Purlins, girts, and eave struts: ASTM A 1011 Grade 55 (380), or ASTM A 653, Grade 55 (380).
2. Thickness:
   a. 16 gauge: 0.056 inch (1.421 mm) minimum uncoated thickness.
   b. 14 gauge: 0.067 inch (1.689 mm) minimum uncoated thickness.
   c. 13 gauge: 0.081 inch (2.051 mm) minimum uncoated thickness.
   d. 12 gauge: 0.100 inch (2.534 mm) minimum uncoated thickness.
3. Finish: Red Oxide.

C. Panels:

1. Materials: ASTM A 792.
2. Thickness and yield strength:
   a. 26 gauge: 0.0172 inch (0.437 mm) minimum uncoated thickness, 80 ksi (550 MPa) yield strength.
   b. 24 gauge: 0.0212 inch (0.538 mm) minimum uncoated thickness, 50 ksi (340 MPa) yield strength.
   c. 22 gauge: 0.0272 inch (0.690 mm) minimum uncoated thickness, 50 ksi (380 MPa) yield strength.
3. Finishes:
   a. Galvalume: Aluminum-Zinc Alloy Coating, 55% Aluminum, 50% Zinc coated steel per ASTM A 792 AZ55.
   b. Galvalume® Plus: Acrylic-Coated Aluminum-Zinc Alloy Coating, 55% Aluminum, 50% Zinc coated steel per ASTM A 792 AZ55 with acrylic finish with no added lubricant.
   c. Exterior Paint:
      1). Modified Silicone-Polyester Two-Coat System (SMP): 0.20 – 0.25 mil primer with 0.7 – 0.8 mil color coat. Basis of Design: Signature 200.
      2). Fluoropolymer Two-Coat System (PVDF): 0.2 – 0.3 mil primer with 0.7 - 0.8 mil 70 percent PVDF fluoropolymer color coat. Basis of Design: Signature 300.
      3). Fluoropolymer Two-Coat Metallic System (PVDF Metallic): 0.2 – 0.3 mil primer with 0.7 - 0.8 mil 70 percent PVDF metallic fluoropolymer color coat. Basis of Design: Signature 300 Metallic.
   d. Interior Paint: 0.5 mil total dry film thickness consisting of primer coat and wash coat of manufacturer's standard light-colored acrylic or polyester backer finish.

4. Fasteners:
    a. Through-fastened panels: Self-drilling with sealing washer.
    b. Standing seam panels: Long life self-drilling with sealing washer.
    c. Ridge: Long-life self-drilling with sealing washer.
    d. Clips to purlin or bar joists: Long-life self-drilling with hex washer head and washer.
5. Clips:
    a. Low or high fixed clips: Use where moderate thermal expansion and contraction in roof panel is expected.
    b. Low or high sliding clips: Provide 2 to 4 inches of travel for panel thermal expansion and contraction.
6. Sealants and closures:
    a. Side-laps: Factory applied, hot melt, foamable mastic.
    b. End-laps, eave, ridge assembly, gable flashings: Field-applied non-skinning sealant as specified in Section 07 92 00.
    c. Standing Seam Roof Closures:
        1). Outside closures: 24 gauge steel sheet.
        2). Inside closures: 18 gauge Galvalume or G-40 galvanized coated steel complying with ASTM A 653/A 653M.
    d. Through-Fastened Roof Closures: Provide closed-cell polyethylene inside [and outside] foam closures.
        1). Bulk Density: 2 pounds per cubic foot.
        2). Service Temperature: -100 to 180 degrees Fahrenheit.
        3). Shore Hardness: 7 on AA scale or 51 on 00 scale when tested to ASTM D 2240.

2.03 PRIMARY FRAMING

A. Frame Design: As indicated on Drawings.
B. Sidewall Column Profile: Tapered or Prismatic.
C. Frame Span: Clear Span as indicated on Drawings.
D. Modular Frame Interior Column Profile: H Shape, or Tube.
E. Bracing: Standard X-Bracing or Portal Frames as allowed by accessories.

2.04 SECONDARY FRAMING

A. Roof Zee Purlins:
    1. Horizontal structural members which support roof coverings.
    2. Depth: As required by design, 8 inches minimum.
    3. Thickness: As required by design, 16 gauge minimum.
    4. Finish: Red Oxide.
B. Long Bay Purlins:
    1. Horizontal structural members that support roof systems, with virtual square shaped top and bottom chords and web members.
    2. Open Web Purlins for Long Bay applications.
    3. Finish: Red Oxide.
C. Wall Zee Girts:
    1. Horizontal structural members that support vertical panels.
    2. Depth: As required by design, 8 minimum.
    3. Gauge: As required by design, 16 gauge (0.056 inch (1.424 mm)) minimum uncoated thickness.
    4. Finish: Red Oxide.
D. Spandrel Beams: ASTM A 36/A 36M or ASTM A 992/A 992M wide flange shapes, minimum yield 50 ksi for support of wall systems provided by others, as required by design.

2.05 BOLTS

A. Rigid Frame Connections: Provide High Strength Bolts, Nuts and Washers:
    1. Bolts: ASTM A 325 or ASTM A 490 Heavy Hex Structural Type I as required by manufacturer's

design.

2. Washers: ASTM F 436 Type 1 Hardened Steel.
3. Nuts: ASTM A 563 Grade C Heavy Hex.
4. Coating: Hot-Dipped Galvanized.

B. Other Connections: Provide High Strength or Machine Bolts as required by manufacturer design:

1. High Strength Bolts and Nuts:
   a. Bolts: ASTM A 325 Heavy Hex Structural Type I.
   b. Nuts: ASTM A 563 Grade C Heavy Hex.
   c. Coating: ASTM F 1941 Electrodeposited Yellow Zinc.
2. Machine Bolts:
   a. Bolts: ASTM A 307 Grade Carbon Steel.
   b. Nuts: ASTM A 563 Hex Nut Grade A.
   c. Coating: ASTM F 1941 Electrodeposited Clear Zinc.

2.06 ROOF SYSTEMS

A. Assembly Performance Requirements: Provide roof products and assemblies meeting the following requirements:

1. UL 580, Class 90 assemblies approved and listed under manufacturer.
2. Class A rated and listed in accordance with UL-790 for External Fire.
3. Class 4 rated and listed in accordance with UL-2218 for Impact Resistance.

B. Through-Fastened Panels:

1. Type: Single skin ribbed panels with exposed fasteners.
2. Strength: Determine and certify allowable panel strengths in accordance with AISI S100.
3. Panel profile(s): PBR; 1-1/4 inch (32 mm) ribs at 12 inch (305 mm) centers, 1/2:12 minimum roof slope.
   a. Thickness: 26 gauge.
   b. Finish: SMP.
   c. Color: Selected from manufacturer standard colors.
   d. Air Infiltration: Maximum air infiltration of 0.04 cubic feet per minute per square foot of specimen area when tested to ASTM E 1680 at a pressure differential of +/- 1.57 psf (75 Pa).
   e. Water Infiltration: No uncontrollable water leakage when tested to ASTM E 1646 at a 20 psf (955 Pa) pressure differential when sprayed with 5 gallons of water per hour per square foot (203 liters per square meter) of specimen area.
   f. FM Approvals Rating: Provide FM 4471 Approved assemblies on the basis of the following ratings. Identify materials with FM Approvals markings:
      1). External Fire: Class A.
      2). Internal Fire: Class 1.
      3). Hail: Severe.
      4). Wind: 1-90.
4. Panel fasteners: Long-life finish.
5. Sidelap mastic: 1 inch x 3/32 inch (25 mm x 2.4 mm).

C. Accessories

1. Accessories (i.e., ventilators, skylights, eave and gable trim, gutters, jacks, and curbs): Standard with metal building system manufacturer, unless otherwise noted and furnished as specified.
2. Eave trim condition: Standard gutters and downspouts.
3. Snow Guard: Glue on snow guard Clear-Deuce by SnoBlox-Snojax. Place a snow guard in the center of each panel valley, in a staggered pattern, across the entire roof area per manufacturer's instruction.

D. Insulation:

1. Faced Blanket Insulation at spaces exposed to view and unfaced at concealed spaces with R-Value greater than 19: Use with using thermal blocks (Minimum R-5) to eliminate "thermal short

circuits".

E. Energy Conservation:

1. Insulate roof panel support structural members to eliminate "thermal short circuits" between structural members and roof panels.
2. Eliminate heat loss (thermal short circuit) caused by compression of insulation between structural members and roof panels by use of thermal block at each structural support location.

2.07 WALL, LINER, SOFFIT, AND FASCIA PANEL SYSTEMS

A. Assembly Performance Requirements: Provide assemblies that function as exterior walls that meet the following requirements:

1. Air Infiltration: Maximum air infiltration of 0.04 cubic feet per minute per square foot of specimen area when tested to ASTM E 283 at a pressure differential of +/- 1.57 psf (75 Pa).
2. Water Infiltration: No uncontrollable water leakage when tested to ASTM E 331 at a 6.24 psf pressure differential when sprayed with 5 gallons of water per hour per square foot of specimen area.

B. Through-Fastened Panels:

1. Panel type: Single skin ribbed panels with exposed fasteners.
2. Panel Strength: Determine in accordance with AISI S100.
3. Panel profiles:
   a. PBR: 12 inch x 1 inch (305 mm x 25 mm) Rib. 1-1/4 inch (32 mm) ribs x 12 inch (305 mm) centers.
4. Thickness:.
   a. Liner: 26 gauge.
   b. Exterior: 26 gauge.
5. Finish:
   a. Liner: Galvalume® Plus
   b. Exterior: SMP.
6. Color: Selected from manufacturer standard colors.
7. Panel fasteners: Long-life finish.

C. Accessories:

1. Base condition:
   a. Formed base: Pre-finished bronze, self-flashing, for through-fastened panels.
   b. Base member: Channel.
   c. Base member flashing: As indicated on Drawings.
2. Framed openings:
   a. Finish: Match girt finish.
   b. Framed opening trim: Standard trim plus full cover trim on exposed jambs and headers.
3. Trim profiles: As indicated on drawings, otherwise manufacturer's standard profiles.

D. Insulation:

1. Faced Blanket Insulation at spaces exposed to view and unfaced at concealed spaces with R-Value greater than 13: Field notch insulation at structural members to prevent outward bowing of wall panel face.

E. Walk Doors:

1. Source: As specified in section 08 11 13 and indicated on drawings.
2. Size: As indicated on Drawings.
3. Elevation: As indicated on Drawings.
4. Type: Non-insulated.
5. Hardware: As specified in section 08 71 00.
6. Frame type: Framed openings.
7. Door assembly: Pre-assembled.

F. Windows:

1. Source: Specified in section 08 41 13.

G. Louvers:

1. Source: By metal building manufacturer.
2. Size: To be selected from available sizes.
3. Type: Fixed.
4. Frame type: Framed openings.
5. Finish: Match adjacent wall color.

2.08 FABRICATION

A. General:

1. Shop-fabricate framing members for field bolted assembly.
2. Surfaces of bolted connections: Smooth and free from burrs and distortions.
3. Shop connections to conform to manufacturer's standard design practices.
4. Mark framing members with identifying mark.
5. Welding to conform to AWS D1.1 and AWS D1.3 as applicable.

B. Primary Framing:

1. Plates, stiffeners, and related members: Factory welded base plates, splice plates, cap plates, and stiffeners into place on structural members.
2. Bolt holes and related machining: Shop fabricate base plates, splices and flanges to include bolt connection holes. Shop-fabricate webs to include bracing holes.
3. Secondary structural connections (purlins and girts): Ordinary (not pretensioned) bolted connections with welded clips.
4. Welding inspection: Per IAS AC472 Part A.
5. Non-destructive testing: Not required.

C. Long Bay Purlins:

1. Fabricate purlins from cold-formed open web long bay system assemblies with stiffened chords.
2. Install connection bolts through purlin seats.
3. Pre-punch assemblies to allow for attachment of frame flange brace angles, compression strut extensions, and diagonal X-bridging at centerline.
4. Furnish bridging as light-gauge cold-formed angles secured using self-drilling fasteners.
5. Manufacture sections in IAS AC472 Part A and B Accredited facility.
6. Top and bottom chords: Nominal 4 inch (102 mm) width formed so that top surface is continuous and flat to facilitate easy assembly of roof system.
7. Fabricate all elements of minimum 16 gauge steel.
8. Subject finished assemblies to periodic testing to loads equal to 110 percent of design loads.

D. Zee Purlins:

1. Fabricate girts from cold-formed Z-shaped sections with stiffened flanges.
2. Size flange stiffeners to comply with requirements of AISI S100.
3. Purlin flanges unequal in width for easier nesting during erection.
4. Purlins pre-punched at factory to provide for field bolting to rigid frames.

E. Girts: Simple or continuous span as required by design. Connection bolts will install through webs not flanges.

F. Bracing:

1. Diagonal Bracing:
    a. Diagonal bracing in roof and sidewalls may be used to resist longitudinal loads in structure when panel diaphragm cannot be used.
    b. Furnish to length and equipped with hillside washers and nuts at each end.
    c. Bracing may consist of rods threaded at each end or galvanized cable with suitable threaded end anchors.
    d. If load requirements dictate, bracing may be of structural angle or pipe, bolted in place.
2. Special Bracing:

a. When diagonal bracing is not permitted in sidewall use rigid frame type portal or fixed base column.

b. Shear walls may be used where adequate to resist applied wind or seismic forces.

3. Flange Braces: Brace compression flange of primary framing laterally with angles connecting to purlin or girt webs so that flange compressive stress is within allowable limits for any combination of loading.

4. Bridging:

a. Laterally brace top chord of long bay purlins with horizontal bridging if roof system being used will not supply adequate lateral support to top chord.

5. Horizontally bridge bottom chord for lateral bracing. One row of bolted diagonal bridging required for long span purlins 40 feet (12 192 mm) long and longer.

G. End Laps:

1. Fabricate with 16 gauge backup plates and eight end lap joint fasteners installed in six pre-punched holes in flat and in dimples in trapezoidal legs.

2. Apply mastic between panels and secure with self-drilling fasteners through panels and backup plate.

3. Through roof fasteners may be used only at end laps and eaves.

2.09 INSULATION

A. Laminated Fiberglass: Owens-Corning Fiberglas, NAIMA 202, “Certified R” metal building insulation.

B. Back-Fill Insulation: Owens-Corning Fiberglas unfaced “Pink Metal Building Insulation Plus”.

C. Roof and Wall Insulation Facing: PSK Light Duty (WMP-VR).

1. 0.0015-inch-thick, UV-stabilized, white polypropylene laminated to 11-pound Kraft paper, reinforced with glass-fiber scrim, in white.

2. Adhere facing to Owens-Corning Fiberglas “Certified R”, NAIMA 202, fiberglass blanket.

3. Assembly of Insulation Blanket and Facing:

a. Flame Spread Rating: Less than 25.

b. UL Label: Submit as specified in Submittals article of this section.

c. Perm Rating: 0.09.

4. Provide through purlins lattice type support banding.

PART 3 - EXECUTION

3.01 PREPARATION

A. Clean surfaces prior to installation.

B. Prepare surfaces using methods recommended by manufacturer for best result for substrate.

3.02 EXAMINATION

A. Examine area to receive metal building system.

B. Notify Architect of conditions that would adversely affect installation or subsequent use.

C. Do not begin installation until unacceptable conditions are corrected.

3.03 ERECTION - STRUCTURAL STEEL FRAMING SYSTEM

A. Erect structural steel framing system in accordance with the Drawings and metal building system manufacturer’s erection drawings.

B. Field Modifications:

1. Require approval of metal building system manufacturer.

2. Responsibility of building erector.

3. Field Modifications to Truss Purlins: Not allowed, unless indicated on erection drawings furnished by metal building system manufacturer.

C. Fixed Column Bases: Grout flush with floor line after structural steel erection is complete.

3.04 INSTALLATION

A. Install system in accordance with manufacturer's instructions and approved Shop Drawings.

B. Fit members square against abutting components.

C. Position members plumb, square, and level.

D. Temporarily brace members until permanently fastened.

E. Do not splice load bearing members.

F. Align and adjust various members forming parts of a complete frame or structure after assembly but before fastening.

G. Welding to conform to AWS D1.1.

H. Fasten panels to supports.

I. Install trim to maintain visual continuity of system.

J. Install joint sealant and gaskets to prevent water penetration.

K. Flash penetrations through roofing with metal trim to match panels

3.05 INSTALLATION - INSULATION

A. Insulation Installation: Install insulation in accordance with metal building system manufacturer's instructions at locations indicated on the Drawings.

3.06 INSTALLATION – INSULATION SUPPORT SYSTEM

A. Install insulation support system in accordance with metal building system manufacturer's instructions at locations indicated on the Drawings.

B. Verify roof structural system is in place before installation of insulation support system.

C. Keep insulation support system in place after metal roof system is installed.

3.07 PROTECTION

A. Protect installed metal building system to ensure that, except for normal weathering, metal building system will be without damage or deterioration at time of Substantial Completion.

3.08 ADJUSTMENT

A. Touch up, repair, or replace damaged products before Substantial Completion.

END OF SECTION

SECTION 22 0513
COMMON MOTOR REQUIREMENTS FOR PLUMBING EQUIPMENT

PART 1 GENERAL

1.01 SECTION INCLUDES

A. General construction and requirements.

B. Applications.

C. Single phase electric motors.

D. Three phase electric motors.

1.02 RELATED REQUIREMENTS

A. Section 26 0583 - Wiring Connections: Electrical characteristics and wiring connections.

B. Section 26 2913 - Enclosed Controllers.

1.03 REFERENCE STANDARDS

A. ABMA STD 9 - Load Ratings and Fatigue Life for Ball Bearings 2015 (Reaffirmed 2020).

B. IEEE 112 - IEEE Standard Test Procedure for Polyphase Induction Motors and Generators 2017.

C. NEMA MG 1 - Motors and Generators 2021.

D. NFPA 70 - National Electrical Code Most Recent Edition Adopted by Authority Having Jurisdiction, Including All Applicable Amendments and Supplements.

1.04 SUBMITTALS

A. See Section 01 3000 - Administrative Requirements for submittal procedures.

B. Product Data: Provide wiring diagrams with electrical characteristics and connection requirements.

1.05 QUALITY ASSURANCE

A. Comply with NFPA 70.

1.06 DELIVERY, STORAGE, AND HANDLING

A. Protect motors stored on site from weather and moisture by maintaining factory covers and suitable weather-proof covering. For extended outdoor storage, remove motors from equipment and store separately.

PART 2 PRODUCTS

2.01 GENERAL CONSTRUCTION AND REQUIREMENTS

A. Construction:
   1. Open drip-proof type except where specifically noted otherwise.
   2. Design for continuous operation in 104 degrees F environment.
   3. Design for temperature rise in accordance with NEMA MG 1 limits for insulation class, service factor, and motor enclosure type.
   4. Motors with frame sizes 254T and larger: Energy efficient type.

B. Explosion-Proof Motors: UL approved and labelled for hazard classification, with over temperature protection.

C. Visible Nameplate: Indicating motor horsepower, voltage, phase, cycles, RPM, full load amps, locked rotor amps, frame size, manufacturer's name and model number, service factor, power factor, efficiency.

D. Wiring Terminations:
   1. Provide terminal lugs to match branch circuit conductor quantities, sizes, and materials indicated. Enclose terminal lugs in terminal box sized to NFPA 70, threaded for conduit.

2. For fractional horsepower motors where connection is made directly, provide threaded conduit connection in end frame.

2.02 APPLICATIONS

A. Exception: Motors less than 250 watts, for intermittent service may be the equipment manufacturer's standard and need not comply with these specifications.

B. Single phase motors for shaft mounted fans, oil burners, and centrifugal pumps: Split phase type.

C. Single phase motors for shaft mounted fans or blowers: Permanent split capacitor type.

D. Single phase motors for fans, pumps, blowers, and air compressors: Capacitor start type.

E. Single phase motors for fans, blowers, and pumps: Capacitor start, capacitor run type.

F. Motors located in exterior locations, wet air streams downstream of sprayed coil dehumidifiers, draw through cooling towers, air cooled condensers, humidifiers, direct drive axial fans, roll filters, explosion proof environments, and dust collection systems: Totally enclosed type.

G. Motors located in outdoors, in wet air streams downstream of sprayed coil dehumidifiers, in draw through cooling towers, and in humidifiers: Totally enclosed weatherproof epoxy-treated type.

H. Motors located outdoors and in draw through cooling towers: Totally enclosed weatherproof epoxy-sealed type.

2.03 SINGLE PHASE POWER - SPLIT PHASE MOTORS

A. Starting Torque: Less than 150 percent of full load torque.

B. Starting Current: Up to seven times full load current.

C. Breakdown Torque: Approximately 200 percent of full load torque.

D. Drip-proof Enclosure: Class A (50 degrees C temperature rise) insulation, NEMA Service Factor, prelubricated sleeve or ball bearings.

E. Enclosed Motors: Class A (50 degrees C temperature rise) insulation, 1.15 Service Factor, prelubricated ball bearings.

2.04 SINGLE PHASE POWER - PERMANENT-SPLIT CAPACITOR MOTORS

A. Starting Torque: Exceeding one fourth of full load torque.

B. Starting Current: Up to six times full load current.

C. Multiple Speed: Through tapped windings.

D. Open Drip-proof or Enclosed Air Over Enclosure: Class A (50 degrees C temperature rise) insulation, minimum 1.15 Service Factor, prelubricated sleeve or ball bearings, automatic reset overload protector.

2.05 SINGLE PHASE POWER - CAPACITOR START MOTORS

A. Starting Torque: Three times full load torque.

B. Starting Current: Less than five times full load current.

C. Pull-up Torque: Up to 350 percent of full load torque.

D. Breakdown Torque: Approximately 250 percent of full load torque.

E. Motors: Capacitor in series with starting winding; provide capacitor-start/capacitor-run motors with two capacitors in parallel with run capacitor remaining in circuit at operating speeds.

F. Drip-proof Enclosure: Class A (50 degrees C temperature rise) insulation, NEMA Service Factor, prelubricated sleeve bearings.

G. Enclosed Motors: Class A (50 degrees C temperature rise) insulation, 1.15 Service Factor, prelubricated ball bearings.

2.06 THREE PHASE POWER - SQUIRREL CAGE MOTORS

A. Starting Torque: Between 1 and 1-1/2 times full load torque.

B. Starting Current: Six times full load current.

C. Power Output, Locked Rotor Torque, Breakdown or Pull Out Torque: NEMA Design B characteristics.

D. Design, Construction, Testing, and Performance: Comply with NEMA MG 1 for Design B motors.

E. Insulation System: NEMA Class F.

F. Service Factor: Minimum 1.15.

G. Testing Procedure: In accordance with IEEE 112. Load test motors to determine free from electrical or mechanical defects in compliance with performance data.

H. Motor Frames: NEMA Standard T-Frames of steel, aluminum, or cast iron with end brackets of cast iron or aluminum with steel inserts.

I. Thermistor System (Motor Frame Sizes 254T and Larger): Three PTC thermistors embedded in motor windings and epoxy encapsulated solid state control relay for wiring into motor starter; refer to Section 26 2913.

J. Bearings: Grease lubricated anti-friction ball bearings with housings equipped with plugged provision for relubrication, rated for minimum ABMA STD 9, L-10 life of 20,000 hours. Calculate bearing load with NEMA minimum V-belt pulley with belt center line at end of NEMA standard shaft extension. Stamp bearing sizes on nameplate.

K. Sound Power Levels: To NEMA MG 1.

L. Part Winding Start Where Indicated: Use part of winding to reduce locked rotor starting current to approximately 60 percent of full winding locked rotor current while providing approximately 50 percent of full winding locked rotor torque.

M. Weatherproof Epoxy Sealed Motors: Epoxy seal windings using vacuum and pressure with rotor and starter surfaces protected with epoxy enamel; bearings double shielded with waterproof non-washing grease.

N. Nominal Efficiency: As indicated at full load and rated voltage when tested in accordance with IEEE 112.

O. Nominal Power Factor: As indicated at full load and rated voltage when tested in accordance with IEEE 112.

2.07 THREE PHASE POWER WITH ADDITIONAL REQUIREMENTS

A. Motors used with Variable Frequency Controllers: Ratings, characteristics, and features coordinated with and approved by controller manufacturer.
   1. Windings: Copper magnet wire with moisture-resistant insulation varnish, designed and tested to resist transient spikes, high frequencies, and short time rise pulses produced by pulse-width moduated inverters.
   2. Energy and Premium Efficient Motors: Class B temperature rise; Class F insulation.
   3. Inverter-Duty Motors: Class F temperature rise; Class H insulation.
   4. Thermal Protection: Comply with NEMA MG 1 requirments for thermally protected motors.

PART 3 EXECUTION

3.01 INSTALLATION

A. Install in accordance with manufacturer's instructions.

B. Install securely on firm foundation. Mount ball bearing motors with shaft in any position.

C. Check line voltage and phase and ensure agreement with nameplate.

D. For any equipment supplied with NFC (Near Field communication) enabled chip, the chip must be intact, and operable when turned over to the owner. If damaged during construction chip shall be replaced with new.

END OF SECTION

SECTION 22 0517
SLEEVES AND SLEEVE SEALS FOR PLUMBING PIPING

PART 1 GENERAL

1.01 SECTION INCLUDES

A. Pipe sleeves.

B. Pipe sleeve-seals.

C. Escutcheons.

1.02 RELATED REQUIREMENTS

A. Section 07 8400 - Firestopping.

B. Section 22 0523 - General-Duty Valves for Plumbing Piping.

C. Section 22 0553 - Identification for Plumbing Piping and Equipment: Piping identification.

D. Section 22 0719 - Plumbing Piping Insulation.

1.03 REFERENCE STANDARDS

A. ASTM C592 - Standard Specification for Mineral Fiber Blanket Insulation and Blanket-Type Pipe Insulation (Metal-Mesh Covered) (Industrial Type) 2022a.

B. ASTM E814 - Standard Test Method for Fire Tests of Penetration Firestop Systems 2013a (Reapproved 2017).

1.04 SUBMITTALS

A. See Section 01 3000 - Administrative Requirements for submittal procedures.

B. Shop Drawings: Indicate pipe materials used, jointing methods, supports, floor and wall penetration seals. Indicate installation, layout, weights, mounting and support details, and piping connections.

1.05 QUALITY ASSURANCE

A. Manufacturer Qualifications: Company specializing in manufacturing the Products specified in this section with minimum three years documented experience.

B. Installer Qualifications: Company specializing in performing work of the type specified this section.
   1. Minimum three years experience.
   2. Approved by manufacturer.

C. Clean equipment, pipes, valves, and fittings of grease, metal cuttings, and sludge that may have accumulated from the installation and testing of the system.

1.06 DELIVERY, STORAGE, AND HANDLING

A. Deliver and store sleeve and sleeve seals in shipping containers, with labeling in place.

B. Provide temporary protective coating on cast iron and steel sleeves if shipped loose.

1.07 WARRANTY

A. See Section 01 7800 - Closeout Submittals, for additional warranty requirements.

B. Correct defective Work within a five year period after Date of Substantial Completion.

PART 2 PRODUCTS

2.01 PIPE SLEEVES

A. Manufacturers:
   1. Flexicraft Industries; Pipe Wall Sleeve: www.flexicraft.com/#sle.

B. Vertical Piping:
   1. Sleeve Length: 1 inch above finished floor.

2. Provide sealant for watertight joint.
3. Blocked Out Floor Openings: Provide 1-1/2 inch angle set in silicon adhesive around opening.
4. Drilled Penetrations: Provide 1-1/2 inch angle ring or square set in silicone adhesive around penetration.

C. Plastic or Sheet Metal: Pipe passing through interior walls, partitions, and floors, unless steel or brass sleeves are specified below.

D. Pipe Passing Through Below Grade Exterior Walls:
1. Zinc coated or cast iron pipe.
2. Provide watertight space with link rubber or modular seal between sleeve and pipe on both pipe ends.

E. Clearances:
1. Provide allowance for insulated piping.
2. Wall, Floor, Partitions, and Beam Flanges: 1 inch greater than external pipe diameter.
3. All Rated Openings: Caulked tight with fire stopping material complying with ASTM E814 in accordance with Section 07 8400 to prevent the spread of fire, smoke, and gases.

2.02 PIPE-SLEEVE SEALS

A. Manufacturers:
1. Flexicraft Industries; PipeSeal: www.flexicraft.com/#sle.

B. Modular Mechanical Seal:
1. Synthetic rubber interlocking links continuously fill annular space between pipe and wall/casing opening.
2. Provide watertight seal between pipe and wall/casing opening.
3. Elastomer element size and material in accordance with manufacturer's recommendations.
4. Glass reinforced plastic pressure end plates.

2.03 ESCUTCHEONS

A. Material:
1. Chrome-plated.
2. Metals and Finish: Comply with ASME A112.18.1.

B. Construction:
1. One-piece for mounting on chrome-plated tubing or pipe and one-piece or split-pattern type elsewhere.
2. Internal tension devices or setscrews to maintain a fixed position against a surface.

PART 3 EXECUTION

3.01 PREPARATION

A. Ream pipe and tube ends. Remove burrs. Bevel plain end ferrous pipe.

B. Remove scale and foreign material, from inside and outside, before assembly.

3.02 INSTALLATION

A. Route piping in orderly manner, plumb and parallel to building structure. Maintain gradient.

B. Install piping to conserve building space, to not interfere with use of space and other work.

C. Install piping and pipe sleeves to allow for expansion and contraction without stressing pipe, joints, or connected equipment.

D. Inserts:
1. Provide inserts for placement in concrete formwork.
2. Provide inserts for suspending hangers from reinforced concrete slabs and sides of reinforced concrete beams.

3. Provide hooked rod to concrete reinforcement section for inserts carrying pipe over 4 inches.
4. Where concrete slabs form finished ceiling, locate inserts flush with slab surface.
5. Where inserts are omitted, drill through concrete slab from below and provide through-bolt with recessed square steel plate and nut above slab.

E. Structural Considerations: Do not penetrate building structural members unless indicated.

F. Manufactured Sleeve-Seal Systems:
1. Install manufactured sleeve-seal systems in sleeves located in grade slabs and exterior concrete walls at piping entrances into building.
2. Provide sealing elements of the size, quantity, and type required for the piping and sleeve inner diameter or penetration diameter.
3. Locate piping in center of sleeve or penetration.
4. Install field assembled sleeve-seal system components in annular space between sleeve and piping.
5. Tighten bolting for a water-tight seal.
6. Install in accordance with manufacturer's recommendations.

G. Escutcheons:
1. Install and firmly attach escutcheons at piping penetrations into finished spaces.
2. Provide escutcheons on both sides of partitions separating finished areas through which piping passes.
3. Use chrome plated escutcheons in occupied spaces and to conceal openings in construction.

H. When installing more than one piping system material, ensure system components are compatible and joined to ensure the integrity of the system. Provide necessary joining fittings. Ensure flanges, union, and couplings for servicing are consistently provided.

3.03 CLEANING

A. Upon completion of work, clean all parts of the installation.

B. Clean equipment, pipes, valves, and fittings of grease, metal cuttings, and sludge that may have accumulated from the installation and testing of the system.

END OF SECTION

SECTION 22 0519
METERS AND GAUGES FOR PLUMBING PIPING

PART 1 GENERAL

1.01 SECTION INCLUDES

A. Pressure Gauges:
   1. Diaphragm-actuated for gases.
   2. Manometers.

B. Thermometers.

C. Pressure-Temperature test plugs.

1.02 REFERENCE STANDARDS

A. ASME B40.100 - Pressure Gauges and Gauge Attachments 2013.

B. ASTM E1 - Standard Specification for ASTM Liquid-in-Glass Thermometers 2014 (Reapproved 2020).

C. ASTM E77 - Standard Test Method for Inspection and Verification of Thermometers 2014 (Reapproved 2021).

D. AWWA M6 - Water Meters -- Selection, Installation, Testing, and Maintenance 2012, with Addendum (2018).

1.03 SUBMITTALS

A. See Section 01 3000 - Administrative Requirements for submittal procedures.

B. Product Data: Provide red-marked product data sheets for each furnished item with associated components and accessories.

PART 2 PRODUCTS

2.01 PRESSURE GAUGES

A. Manufacturers:
   1. Ashcroft, Inc: www.ashcroft.com/#sle.
   2. Dwyer Instruments, Inc: www.dwyer-inst.com/#sle.
   3. Miljoco Corp.
   4. Moeller Instrument Company, Inc: www.moellerinstrument.com/#sle.
   5. Omega Engineering a subsidiary of Spectris, Plc: www.omega.com/#sle.
   6. Trerice, H.O. Co.
   7. Weksler Glass Thermometer Corp: www.wekslerglass.com/#sle.

B. Diaphragm Actuated for Gases:
   1. Dial Size and Cover: 3-1/2 inch diameter scale with polycarbonate window.
   2. Dial Text and Markings: Black color on white background with scaled cm (cm wg) and inch (in wg) units.
   3. Accuracy: ASME B40.100, adjustable commercial grade (B) with 2 percent at mid-range of span.
   4. Process Connection: Lower-back, 1/4 inch NPT male except where noted.

C. Manometer: Inclined type, red oil on white background with black figures, front recalibration adjustment, 3 percent of full scale accuracy.

D. Accessories:
   1. Air or Gas Sensor: Static pressure with compression fittings for bulkhead mounting and 1/4 inch diameter tubing.

2.02 THERMOMETERS

A. Manufacturers:
   1. Dwyer Instruments, Inc: www.dwyer-inst.com/#sle.

2. Miljoco Corp.
3. Moeller Instrument Company, Inc: www.moellerinstrument.com/#sle.
4. Trerice, H.O. Co.
5. Watts Water Technologies, Inc: www.watts.com/#sle.
6. Weiss Instruments, LLC: www.weissinstruments.com/#sle.
7. Weksler Glass Thermometer Corp: www.wekslerglass.com/#sle.

B. General:
1. Product Compliance: ASTM E1.
2. Lens: Clear glass, except where stated.
3. Accuracy: One percent, when tested in accordance with ASTM E77, except where stated.
4. Scale: Black markings depicting single scale in degrees F where expected process value falls half-span of standard temperature range.

C. Thermometers - Adjustable Angle: 7 inch v-shape aluminum case with clear glass window scale, 9 inch NPT stem, red or blue organic non-toxic liquid filled glass tube, and adjustable joint with positive locking device allowing 360 degrees in horizontal plane or 180 degrees in vertical plane adjustments.

D. Thermometers - Dial Type:
1. Fixed: 5 inch diameter dial with black pointer, stainless steel case, silicone damping bimetal element, hermetically sealed lens, recalibrating screw, and 2-1/2 inch NPT stem.

2.03 PRESSURE-TEMPERATURE TEST PLUGS:

A. Size: 500 psi capacity; 1/2 inch MPT brass fitting with gasket, cap, and retaining strap for 1/8 inch pressure gauge or temperature probe.

B. Wetted Materials per Temperature Range:
1. Up to 200 degrees F: Brass probe with neoprene core.

C. Accessories: Brass, lever-handle cock and snubber-filter.

D. Test Kit: Internally padded carrying case fitted with two 2-1/2 inch diameter pressure gauges, adapters, two 1/8 inch probes, and 1 inch dual-scale dial thermometers.

PART 3 EXECUTION

3.01 EXAMINATION

A. Verification of Conditions: Verify Utility Service Provider piping readiness to receive meter.

B. Do not install instrumentation when areas are under construction, except for required rough-in, taps, supports, and test plugs.

3.02 INSTALLATION

A. Install metering products in accordance with manufacturer's instructions for intended fluid type and service.

B. Install water meters with inlet and outlet isolation valves in compliance with AWWA M6.

C. Install gas meters in accordance with Utility Service Provider instructions with required appurtenances.

D. Install pressure gauges as follows:
1. At Pumps: Place single gauge before strainer, suction side and discharge side.
2. Include gauge cock to isolate each gauge and extend nipples for insulation clearance.
3. Include siphons on high temperature systems and select type according to service rating.
4. Adjust gauges to selected viewing angle, clean thoroughly, and calibrate to zero.

E. Install thermometers as follows:
1. Hot Water Heaters: Place upstream and downstream of heater. Add one on the inlet end when using steam as the water heating medium.

2. Piping: Install thermometers in branch butt weld connection fitting or socket-weld thermowell. Enlarge pipes smaller than 2-1/2 inch to accommodate sockets. Ensure sockets are above insulation clearance.

F. Install stem type thermometers in the outlet of each domestic, hot-water storage tank.

G. Install stem type thermometers at suction and discharge of each pump.

H. Install dry-case-type pressure gages for discharge of each pressure-reducing valve.

I. Provide the following temperature ranges for thermometers:
   1. Domestic Hot Water: 30 to 240 deg F, with 2-degree scale divisions.
   2. Domestic Cold Water: 0 to 100 deg F, with 2-degree scale divisions.

J. Locate PT (pressure-temperature) test plugs adjacent to control device sockets.

END OF SECTION

SECTION 22 0523
GENERAL-DUTY VALVES FOR PLUMBING PIPING

PART 1 GENERAL

1.01 SECTION INCLUDES

A. Ball valves.

B. Butterfly valves.

C. Check valves.

D. Gate valves.

E. Globe valves.

1.02 REFERENCE STANDARDS

A. ASME B1.20.1 - Pipe Threads, General Purpose, Inch 2013 (Reaffirmed 2018).

B. ASME B16.1 - Gray Iron Pipe Flanges and Flanged Fittings: Classes 25, 125, and 250 2020.

C. ASTM A126 - Standard Specification for Gray Iron Castings for Valves, Flanges, and Pipe Fittings 2004 (Reapproved 2019).

D. ASTM A536 - Standard Specification for Ductile Iron Castings 1984, with Editorial Revision (2019).

E. ASTM B62 - Standard Specification for Composition Bronze or Ounce Metal Castings 2017.

F. MSS SP-45 - Drain and Bypass Connections 2020.

G. MSS SP-67 - Butterfly Valves 2022.

H. MSS SP-80 - Bronze Gate, Globe, Angle, and Check Valves 2019.

I. MSS SP-110 - Ball Valves Threaded, Socket-Welding, Solder Joint, Grooved and Flared Ends 2010, with Errata .

J. NSF 61 - Drinking Water System Components - Health Effects 2021.

K. NSF 372 - Drinking Water System Components - Lead Content 2022.

1.03 SUBMITTALS

A. See Section 01 3000 - Administrative Requirements for submittal procedures.

B. Product Data: Provide data on valves including manufacturers catalog information. Submit performance ratings, rough-in details, weights, support requirements, and piping connections.

C. Maintenance Materials: Furnish Owner with one wrench for every five plug valves, in each size of square plug valve head.
   1. See Section 01 6000 - Product Requirements for additional provisions.

1.04 QUALITY ASSURANCE

A. Manufacturer:
   1. Obtain valves for each valve type from single manufacturer.

1.05 DELIVERY, STORAGE, AND HANDLING

A. Prepare valves for shipping as follows:
   1. Minimize exposure of operable surfaces by setting plug and ball valves to open position.
   2. Protect valve parts exposed to piped medium against rust and corrosion.
   3. Protect valve piping connections such as grooves, weld ends, threads, and flange faces.
   4. Adjust globe, gate, and angle valves to the closed position to avoid clattering.
   5. Secure check valves in either the closed position or open position.
   6. Adjust butterfly valves to closed or partially closed position.

B. Use the following precautions during storage:

1. Maintain valve end protection and protect flanges and specialties from dirt.
2. Store valves in shipping containers and maintain in place until installation.
   a. Store valves indoors in dry environment.
   b. Store valves off the ground in watertight enclosures when indoor storage is not an option.

1.06 EXERCISE THE FOLLOWING PRECAUTIONS FOR HANDLING:

A. Handle large valves with sling, modified to avoid damage to exposed parts.

B. Avoid the use of operating handles or stems as rigging or lifting points.

PART 2 PRODUCTS

2.01 MANUFACTURERS

A. Acceptable Manufacturers:
   1. Hammond
   2. Nibco
   3. Stockham

2.02 GENERAL REQUIREMENTS

A. Valve Pressure and Temperature Ratings: No less than rating indicated; as required for system pressures and temperatures.

B. Valve Sizes: Match upstream piping unless otherwise indicated.

C. Valve Actuator Types:
   1. Gear Actuator: Quarter-turn valves 8 inch and larger.
   2. Handwheel: Valves other than quarter-turn types.
   3. Hand Lever: Quarter-turn valves 6 inch and smaller except plug valves.
   4. Wrench: Plug valves with square heads.

D. Insulated Piping Valves: With 2 inch stem extensions and the following features:
   1. Gate Valves: Rising stem.
   2. Ball Valves: Extended operating handle of non-thermal-conductive material, and protective sleeve that allows operation of valve without breaking the vapor seal or disturbing insulation.
   3. Butterfly Valves: Extended neck.

E. Valve-End Connections:
   1. Threaded End Valves: ASME B1.20.1.
   2. Flanges on Iron Valves: ASME B16.1 for flanges on iron valves.

F. General ASME Compliance:

G. Potable Water Use:
   1. Certified: Approved for use in compliance with NSF 61 and NSF 372.
   2. Lead-Free Certified: Wetted surface material includes less than 0.25 percent lead content.

H. Valve Bypass and Drain Connections: MSS SP-45.

I. Source Limitations: Obtain each valve type from a single manufacturer.

2.03 BRONZE BALL VALVES - 2" AND SMALLER

A. Two Piece, Regular Port with Bronze Trim:
   1. Comply with MSS SP-110.
   2. WSP Rating: 150 psi.
   3. WOG Rating: 600 psi.
   4. Body: Forged bronze or dezincified-brass alloy.
   5. Ends Connections: Pipe thread or solder.
   6. Seats: PTFE.

2.04 IRON, SINGLE FLANGE BUTTERFLY VALVES

A. Lug Style; Bi-directional dead-end service without use of downstream flange:
   1. Comply with MSS SP-67, Type I.
   2. Body Material: ASTM A126, cast iron or ASTM A536, ductile iron.
   3. Stem: One or two-piece stainless steel.
   4. Seat: EPDM.
   5. Disc: Stainless steel.

2.05 IRON, GROOVED-END BUTTERFLY VALVES

A. CWP Rating: 175 psi.
   1. Comply with MSS SP-67, Type I.
   2. Body: Coated ductile iron.
   3. Stem: Two-piece stainless steel.
   4. Disc: Coated ductile iron.
   5. Disc Seal: EPDM.

2.06 BRONZE SWING CHECK VALVES - 2" AND SMALLER

A. Class 125: CWP Rating: 200 psig (1380 kPa).
   1. Pressure and Temperature Rating: MSS SP-80, Type 3.
   2. Design: Y-pattern, horizontal or vertical flow.
   3. Body: Bronze, ASTM B62.
   4. End Connections: Threaded.
   5. Disc: Bronze.

2.07 BRONZE GATE VALVES - 2" AND SMALLER

A. General:
   1. Fabricate from dezincification resistant material.
   2. Copper alloys containing more than 15 percent zinc are not permitted.
   3. Pressure-Temperature Range: MSS SP-80, Type I.
   4. Pressure-Temperature Range: MSS SP-80, Type I.
   5. Class 150: CWP Rating; 300 psi.
   6. Ends Connections: Threaded or solder.
   7. Disc: Solid wedge; bronze.
   8. Handwheel Operator: Malleable iron.
   9. Handwheel Operator: Malleable iron.
   10. Disc: Solid wedge; bronze.
   11. End Connections: Threaded or solder.

B. Rising Stem or OS&Y:

C. Non-Rising Stem or NRS
   1. Class 125:
   2. Body: ASTM B62, bronze with integral seat and screw-in bonnet.
   3. Stem: Bronze.
   4. Packing: Asbestos free.
   5. Packing: Asbestos free.
   6. Stem: Bronze.
   7. Body: ASTM B62, bronze with integral seat and screw-in bonnet.

2.08 BRONZE GLOBE VALVES - 2" AND SMALLER

A. General:
   1. Fabricate from dezincification resistant material.

2. Copper alloys containing more than 15 percent zinc are not permitted.

B. Class 125 and Class 250:
   a. WOG Rating: 200 psi.
   2. Class 250: WOG Rating; 300 psi.
   3. Body: ASTM B62, bronze with integral seat and screw-in bonnet.
   4. Bonnet: NRS; Non-rising Stem.
   5. Disc: PTFE.
   6. Handwheel Operator: Malleable iron.
   7. Class 125:
      a. WSP Rating: 125 psi, saturated.
   8. Comply with MSS SP-80, Type 1.
   9. End Connections: Threaded or solder.
   10. Non-Rising Stem: Bronze.
   11. Packing: Asbestos free.

PART 3 EXECUTION

3.01 EXAMINATION

A. Discard all packing materials and verify that valve interior, including threads and flanges are completely clean without signs of damage or degradation that could result in leakage.

B. Verify valve parts to be fully operational in all positions from closed to fully open.

C. Confirm gasket material to be suitable for the service, to be of correct size, and without defects that could compromise effectiveness.

D. Should valve is determined to be defective, replace with new valve.

3.02 VALVE APPLICATIONS

A. Ball valves shall be installed in 2" and smaller pipes for shutoff duty in all piping.

B. Butterfly valves shall be installed in 2-1/2" and larger pipes for balancing and shutoff duty in all piping.

C. Valves shall be installed on inlet of each fixture or equipment on each branch water line, each side of control valve and elsewhere shown on the Construction Documents.

D. Install wafer type butterfly valves in domestic water system where piping is 6" and smaller.

E. Install lug type butterfly valves in domestic water system where piping is 8" and larger.

3.03 INSTALLATION

A. Provide unions or flanges with valves to facilitate equipment removal and maintenance while maintaining system operation and full accessibility for servicing.

B. Provide separate valve support as required and locate valve with stem at or above center of piping, maintaining unimpeded stem movement.

C. For any equipment supplied with NFC (Near Field communication) enabled chip the chip must be intact and operable when turned over to the owner. If damaged during construction chip shall be replaced with new.

3.04 ADJUSTING

A. Adjust or replace valve packing after piping systems have been tested and put into service but before final adjusting and balancing. Replace valves if persistent leaking occurs.

END OF SECTION

SECTION 22 0529
HANGERS AND SUPPORTS FOR PLUMBING PIPING AND EQUIPMENT

PART 1 GENERAL

1.01 SECTION INCLUDES

A. Support and attachment components.

1.02 RELATED REQUIREMENTS

A. Section 03 3000 - Cast-in-Place Concrete: Concrete equipment pads.

B. Section 22 0548 - Vibration and Seismic Controls for Plumbing Piping and Equipment.

1.03 REFERENCE STANDARDS

A. ASTM A123/A123M - Standard Specification for Zinc (Hot-Dip Galvanized) Coatings on Iron and Steel Products 2017.

B. ASTM A153/A153M - Standard Specification for Zinc Coating (Hot-Dip) on Iron and Steel Hardware 2016a.

C. ASTM A181/A181M - Standard Specification for Carbon Steel Forgings, for General-Purpose Piping 2022.

D. ASTM A36/A36M - Standard Specification for Carbon Structural Steel 2019.

E. ASTM A47/A47M - Standard Specification for Ferritic Malleable Iron Castings 1999, with Editorial Revision (2018).

F. ASTM A283/A283M - Standard Specification for Low and Intermediate Tensile Strength Carbon Steel Plates 2018.

G. ASTM A395/A395M - Standard Specification for Ferritic Ductile Iron Pressure-Retaining Castings for Use at Elevated Temperatures 1999 (Reapproved 2018).

H. ASTM B633 - Standard Specification for Electrodeposited Coatings of Zinc on Iron and Steel 2019.

I. ASTM E84 - Standard Test Method for Surface Burning Characteristics of Building Materials 2022.

J. ASTM E96/E96M - Standard Test Methods for Gravimetric Determination of Water Vapor Transmission Rate of Materials 2022.

K. MSS SP-58 - Pipe Hangers and Supports - Materials, Design, Manufacture, Selection, Application, and Installation 2018, with Amendment (2019).

L. UL (DIR) - Online Certifications Directory Current Edition.

M. UL 723 - Standard for Test for Surface Burning Characteristics of Building Materials Current Edition, Including All Revisions.

1.04 ADMINISTRATIVE REQUIREMENTS

A. Coordination:
   1. Coordinate sizes and arrangement of supports and bases with the actual equipment and components to be installed.
   2. Coordinate the work with other trades to provide additional framing and materials required for installation.
   3. Coordinate compatibility of support and attachment components with mounting surfaces at the installed locations.
   4. Coordinate the arrangement of supports with ductwork, piping, equipment and other potential conflicts installed under other sections or by others.
   5. Notify Architect of any conflicts with or deviations from Contract Documents. Obtain direction before proceeding with work.

B. Sequencing:

1. Do not install products on or provide attachment to concrete surfaces until concrete has fully cured in accordance with Section 03 3000.

1.05 SUBMITTALS

A. See Section 01 3000 - Administrative Requirements for submittal procedures.

B. Product Data: Provide manufacturer's standard catalog pages and data sheets for metal channel (strut) framing systems, nonpenetrating rooftop supports, post-installed concrete and masonry anchors, and thermal insulated pipe supports.

C. Shop Drawings: Include details for fabricated hangers and supports where materials or methods other than those indicated are proposed for substitution.
   1. Application of protective inserts, saddles, and shields at pipe hangers for each type of insulation and hanger.

1.06 QUALITY ASSURANCE

A. Comply with applicable building code.

B. Installer Qualifications for Powder-Actuated Fasteners (when specified): Certified by fastener system manufacturer with current operator's license.

C. Product Listing Organization Qualifications: An organization recognized by OSHA as a Nationally Recognized Testing Laboratory (NRTL) and acceptable to authorities having jurisdiction.

1.07 DELIVERY, STORAGE, AND HANDLING

A. Receive, inspect, handle, and store products in accordance with manufacturer's instructions.

PART 2 PRODUCTS

2.01 SUPPORT AND ATTACHMENT COMPONENTS

A. General Requirements:
   1. Provide all required hangers, supports, anchors, fasteners, fittings, accessories, and hardware as necessary for the complete installation of plumbing work.
   2. Provide products listed, classified, and labeled as suitable for the purpose intended, where applicable.
   3. Where support and attachment component types and sizes are not indicated, select in accordance with manufacturer's application criteria as required for the load to be supported. Include consideration for vibration, equipment operation, and shock loads where applicable.
   4. Do not use wire, chain, perforated pipe strap, or wood for permanent supports unless specifically indicated or permitted.
   5. Steel Components: Use corrosion resistant materials suitable for the environment where installed.
      a. Zinc-Plated Steel: Electroplated in accordance with ASTM B633.
      b. Galvanized Steel: Hot-dip galvanized after fabrication in accordance with ASTM A123/A123M or ASTM A153/A153M.

B. Thermal Insulated Pipe Supports:
   1. Manufacturers:
      a. Buckaroos, Inc: www.buckaroos.com/#sle.
      b. KB Enterprises: www.snappitz.com/#sle.
   2. General Requirements:
      a. Insulated pipe supports to be provided at hanger, support, and guide locations on pipe requiring insulation or additional support.
      b. Surface Burning Characteristics: Flame spread index/smoke developed index of 5/30, maximum, when tested in accordance with ASTM E84 or UL 723.

c. Pipe supports to be provided for nominally sized 1/2 to 30 inch iron pipes.
d. Insulation inserts to consist of rigid phenolic foam insulation surrounded by a 360 degree, PVC jacketing.

3. PVC Jacket:
a. Pipe insulation protection shields to be provided with a ball bearing hinge and locking seam.
b. Minimum Service Temperature: Minus 40 degrees F.
c. Maximum Service Temperature: 180 degrees F.
d. Moisture Vapor Transmission: 0.0071 perm inch, when tested in accordance with ASTM E96/E96M.
e. Thickness: 60 mil.

4. Pipe insulation protection shields to be provided at the hanger points and guide locations on pipes requiring insulation.

C. Pipe Supports:
1. Material: ASTM A395/A395M ductile iron, ASTM A36/A36M carbon steel, ASTM A47/A47M malleable iron, ASTM A181/A181M forged steel, or ASTM A283/A283M steel.
2. Liquid Temperatures Up To 122 degrees F:
a. Overhead Support: MSS SP-58 Types 1, 3 through 12 clamps.
b. Support From Below: MSS SP-58 Types 35 through 38.

D. Pipe Stanchions:
1. Manufacturers:
a. Anvil International: www.anvilintl.com/#sle.
b. Source Limitations: Furnish hardware, fittings, and accessories from single manufacturer.
2. Material: Malleable iron, ASTM A47/A47M; or carbon steel, ASTM A36/A36M.
3. Provide coated or plated saddles to isolate steel hangers from dissimilar metal tube or pipe.

E. Beam Clamps:
1. Manufacturers:
a. Ferguson Enterprises Inc: www.fnw.com/#sle.
b. Source Limitations: Furnish hardware, fittings, and accessories from single manufacturer.
2. Provide clamps with hardened steel cup-point set screws and lock-nuts for anchoring in place.
3. Material: ASTM A395/A395M ductile iron, ASTM A36/A36M carbon steel, ASTM A47/A47M malleable iron, ASTM A181/A181M forged steel, or ASTM A283/A283M steel.

F. Riser Clamps:
1. Manufacturers:
a. Ferguson Enterprises Inc: www.fnw.com/#sle.
b. Source Limitations: Furnish hardware, fittings, and accessories from single manufacturer.
2. For insulated pipe runs, provide two bolt-type clamps designed for installation under insulation.
3. MSS SP-58 type 1 or 8, carbon steel or steel with epoxy plated, plain, stainless steel, or zinc plated finish.
4. UL (DIR) listed: Pipe sizes 1/2 to 8 inch.

G. Offset Pipe Clamps: Double-leg design two-piece pipe clamp.

H. Strut Clamps:
1. Manufacturers:
a. Ferguson Enterprises Inc: www.fnw.com/#sle.
b. Source Limitations: Furnish hardware, fittings, and accessories from single manufacturer.
2. Pipe Clamp: Two-piece rigid, universal, or outer diameter type, carbon steel with epoxy copper or zinc finish.

I. Insulation Clamps:

1. Manufacturers:
   a. Ferguson Enterprises Inc: www.fnw.com/#sle.
   b. Source Limitations: Furnish hardware, fittings, and accessories from single manufacturer.
2. Two bolt-type clamps designed for installation under insulation.
3. Material: Carbon steel with epoxy copper or zinc finish.

J. Pipe Hangers:
1. Hangers:
   a. Provide hinged split ring and yoke roller hanger with epoxy copper or plain finish.
   b. Material: ASTM A47/A47M malleable iron or ASTM A36/A36M carbon steel.
   c. Provide hanger rod and nuts of the same type and material for a given pipe run.
   d. Provide coated or plated hangers to isolate steel hangers from dissimilar metal tube or pipe.

K. Intermediate Pipe Guides:
1. Manufacturers:
   a. Anvil International: www.anvilintl.com/#sle.
2. Pipe Sizes 6 inch and Smaller: Minimum clearance of 0.16 inch.
3. Use pipe clamps with oversize pipe sleeve that provides clearance around pipe.

L. Pipe Alignment Guides: Galvanized steel.
1. Manufacturers:
   a. Anvil International: www.anvilintl.com/#sle.
2. Pipe Size 8 inch and Smaller: Spider or sleeve type.
3. Pipe Sizes 10 inch and Larger: Roller type.

M. Anchors and Fasteners:
1. Manufacturers - Mechanical Anchors:
   a. Hilti, Inc: www.us.hilti.com/#sle.
   b. ITW Red Head, a division of Illinois Tool Works, Inc: www.itwredhead.com/#sle.
   c. Powers Fasteners, Inc: www.powers.com/#sle.
   d. Simpson Strong-Tie Company Inc: www.strongtie.com/#sle.
2. Manufacturers - Powder-Actuated Fastening Systems:
   a. Hilti, Inc: www.us.hilti.com/#sle.
   b. ITW Ramset, a division of Illinois Tool Works, Inc: www.ramset.com/#sle.
   c. Powers Fasteners, Inc: www.powers.com/#sle.
   d. Simpson Strong-Tie Company Inc: www.strongtie.com/#sle.
3. Unless otherwise indicated and where not otherwise restricted, use the anchor and fastener types indicated for the specified applications.

PART 3 EXECUTION

3.01 EXAMINATION

A. Verify that field measurements are as indicated.

B. Verify that mounting surfaces are ready to receive support and attachment components.

C. Verify that conditions are satisfactory for installation prior to starting work.

3.02 INSTALLATION

A. Install products in accordance with manufacturer's instructions.

B. Provide independent support from building structure. Do not provide support from piping, ductwork, conduit, or other systems.

C. Unless specifically indicated or approved by Architect, do not provide support from suspended ceiling support system or ceiling grid.

D. Unless specifically indicated or approved by Architect, do not provide support from roof deck.

E. Do not penetrate or otherwise notch or cut structural members without approval of Structural Engineer.

F. Provide thermal insulated pipe supports complete with hangers and accessories. Install thermal insulated pipe supports during the installation of the piping system.

G. Equipment Support and Attachment:
   1. Use metal fabricated supports or supports assembled from metal channel (strut) to support equipment as required.
   2. Use metal channel (strut) secured to studs to support equipment surface-mounted on hollow stud walls when wall strength is not sufficient to resist pull-out.
   3. Use metal channel (strut) to support surface-mounted equipment in wet or damp locations to provide space between equipment and mounting surface.
   4. Securely fasten floor-mounted equipment. Do not install equipment such that it relies on its own weight for support.

H. Secure fasteners according to manufacturer's recommended torque settings.

I. Remove temporary supports.

3.03 FIELD QUALITY CONTROL

A. See Section 01 4000 - Quality Requirements for additional requirements.

B. Inspect support and attachment components for damage and defects.

C. Repair cuts and abrasions in galvanized finishes using zinc-rich paint recommended by manufacturer. Replace components that exhibit signs of corrosion.

D. Correct deficiencies and replace damaged or defective support and attachment components.

END OF SECTION

SECTION 22 0553
IDENTIFICATION FOR PLUMBING PIPING AND EQUIPMENT

PART 1 GENERAL

1.01 SECTION INCLUDES

A. Nameplates.

B. Tags.

C. Stencils.

D. Pipe markers.

E. Ceiling tacks.

1.02 RELATED REQUIREMENTS

A. Section 09 9123 - Interior Painting: Identification painting.

1.03 REFERENCE STANDARDS

A. ASME A13.1 - Scheme for the Identification of Piping Systems 2020.

1.04 SUBMITTALS

A. See Section 01 3000 - Administrative Requirements for submittal procedures.

B. Chart, Schedule, and Record Drawings: Submit valve chart and schedule, including valve tag number, location, function, and valve manufacturer's name and model number. Submit record drawings showing valve location and valve tag number along with chart and schedule attached to drawing(s).

C. Product Data: Provide manufacturers catalog literature for each product required.

PART 2 PRODUCTS

2.01 PLUMBING COMPONENT IDENTIFICATION GUIDELINE

A. Pipe Markers: 3/4 inch diameter and higher.

2.02 NAMEPLATES

A. Description: Laminated piece with up to three lines of text.
   1. Letter Color: White.
   2. Letter Height: 1/4 inch.
   3. Background Color: Black.

2.03 TAGS

A. Flexible: Vinyl with engraved black letters on light contrasting background color with up to three lines of text. Minimum tag size 1-1/2 inch in diameter.

B. Metal: Brass, 19 gauge 1-1/2 inch in diameter with smooth edges, blank, smooth edges, and corrosion-resistant ball chain. Up to three lines of text.

C. Valve Tag Chart: Typewritten 12-point letter size list in anodized aluminum frame.

2.04 STENCILS

A. Stencil Paint: As specified in Section 09 9123, semi-gloss enamel, colors complying with ASME A13.1.

2.05 PIPE MARKERS

A. Comply with ASME A13.1.

B. Flexible Tape Marker: Flexible, vinyl film tape with pressure sensitive adhesive backing and printed markings.

C. Identification Scheme, ASME A13.1:
   1. Primary: External Pipe Diameter, Uninsulated or Insulated.

2. Secondary: Color scheme per fluid service.
   a. Water; Potable, Cooling, Boiler Feed, and Other: White text on green background.

2.06 CEILING TACKS

A. Description: Steel with 3/4 inch diameter color coded head.

B. Color code as follows:
   1. Plumbing Valves: Green.

PART 3 EXECUTION

3.01 PREPARATION

A. Degrease and clean surfaces to receive identification products.

B. Prepare surfaces for stencil painting, see Section 09 9123.

3.02 INSTALLATION

A. Install flexible nameplates with corrosive-resistant mechanical fasteners, or adhesive. Apply with sufficient adhesive to ensure permanent adhesion and seal with clear lacquer.

B. Install tags in clear view and align with axis of piping

C. Apply stencil painted identification in compliance with Section 09 9123 requirements. Identify unit with assigned id-number and area being served using pipe marking rules.

D. Install plastic pipe markers in accordance with manufacturer's instructions.

E. Install plastic tape pipe marker around pipe in accordance with manufacturer's instructions.

F. Install underground plastic pipe markers 6 to 8 inches below finished grade, directly above buried pipe.

G. Locate ceiling tacks to locate valves or dampers above lay-in panel ceilings. Locate in corner of panel closest to equipment.

END OF SECTION

SECTION 22 0719
PLUMBING PIPING INSULATION

PART 1 GENERAL

1.01 SECTION INCLUDES

A. Flexible elastomeric cellular insulation.

B. Glass fiber insulation.

C. Jacketing and accessories.

1.02 RELATED REQUIREMENTS

A. Section 07 8400 - Firestopping.

B. Section 22 1005 - Plumbing Piping: Placement of hangers and hanger inserts.

1.03 REFERENCE STANDARDS

A. ASTM C177 - Standard Test Method for Steady-State Heat Flux Measurements and Thermal Transmission Properties by Means of the Guarded-Hot-Plate Apparatus 2019.

B. ASTM C534/C534M - Standard Specification for Preformed Flexible Elastomeric Cellular Thermal Insulation in Sheet and Tubular Form 2020a.

C. ASTM C547 - Standard Specification for Mineral Fiber Pipe Insulation 2022.

D. ASTM C795 - Standard Specification for Thermal Insulation for Use in Contact with Austenitic Stainless Steel 2008 (Reapproved 2018).

E. ASTM E84 - Standard Test Method for Surface Burning Characteristics of Building Materials 2022.

F. ASTM E96/E96M - Standard Test Methods for Gravimetric Determination of Water Vapor Transmission Rate of Materials 2022.

G. UL 723 - Standard for Test for Surface Burning Characteristics of Building Materials Current Edition, Including All Revisions.

1.04 SUBMITTALS

A. See Section 01 3000 - Administrative Requirements for submittal procedures.

B. Product Data: Provide product description, thermal characteristics, list of materials and thickness for each service, and locations.

1.05 DELIVERY, STORAGE, AND HANDLING

A. Accept materials on site, labeled with manufacturer's identification, product density, and thickness.

1.06 FIELD CONDITIONS

A. Maintain ambient conditions required by manufacturers of each product.

B. Maintain temperature before, during, and after installation for minimum of 24 hours.

PART 2 PRODUCTS

2.01 REGULATORY REQUIREMENTS

A. Surface Burning Characteristics: Flame spread index/Smoke developed index of 25/50, maximum, when tested in accordance with ASTM E84 or UL 723.

2.02 GLASS FIBER INSULATION

A. Manufacturers:
   1. CertainTeed Corporation: www.certainteed.com.
   2. Johns Manville Corporation: www.jm.com.
   3. Knauf Insulation: www.knaufinsulation.com/#sle.
   4. Owens Corning Corporation; Fiberglas Pipe Insulation ASJ: www.ocbuildingspec.com/#sle.

B. Insulation: ASTM C547 and ASTM C795; rigid molded, noncombustible.
   1. K Value: ASTM C177, 0.24 at 75 degrees F.
   2. Maximum Service Temperature: 850 degrees F.
   3. Maximum Moisture Absorption: 0.2 percent by volume.

C. Vapor Barrier Jacket: White Kraft paper with glass fiber yarn, bonded to aluminized film; moisture vapor transmission when tested in accordance with ASTM E96/E96M of 0.02 perm.

2.03 FLEXIBLE ELASTOMERIC CELLULAR INSULATION

A. Manufacturers:
   1. Aeroflex USA, Inc: www.aeroflexusa.com.
   2. Armacell LLC: www.armacell.us.
   3. K-Flex USA LLC: www.kflexusa.com.

B. Insulation: Preformed flexible elastomeric cellular rubber insulation complying with ASTM C534/C534M Grade 1; use molded tubular material wherever possible.
   1. Minimum Service Temperature: Minus 40 degrees F.
   2. Maximum Service Temperature: 220 degrees F.
   3. K Value: ASTM C177, 0.24 at 75 degrees F.
   4. Connection: Waterproof vapor barrier adhesive.

C. Elastomeric Foam Adhesive: Air dried, contact adhesive, compatible with insulation.

2.04 JACKETING AND ACCESSORIES

A. PVC Plastic Jacket:
   1. Jacket: One piece molded type fitting covers and sheet material, off-white color.
      a. Minimum Service Temperature: 0 degrees F.
      b. Maximum Service Temperature: 150 degrees F.
      c. Moisture Vapor Permeability: 0.002 perm inch, maximum, when tested in accordance with ASTM E96/E96M.
      d. Thickness: 10 mil, 0.010 inch.
      e. Connections: Brush on welding adhesive.
   2. Covering Adhesive Mastic: Compatible with insulation.

B. Canvas Jacket: UL listed 6 oz/sq yd plain weave cotton fabric treated with dilute fire-retardant lagging adhesive.
   1. Lagging Adhesive: Compatible with insulation.

C. Aluminum Jacket:
   1. Thickness: 0.016 inch sheet.
   2. Finish: Smooth.
   3. Joining: Longitudinal slip joints and 2 inch laps.
   4. Fittings: 0.016 inch thick die-shaped fitting covers with factory-attached protective liner.
   5. Metal Jacket Bands: 3/8 inch wide; 0.015 inch thick aluminum.

PART 3 EXECUTION

3.01 EXAMINATION

A. Verify that piping has been tested before applying insulation materials.

B. Verify that surfaces are clean and dry, with foreign material removed.

3.02 INSTALLATION

A. Install in accordance with manufacturer's instructions.

B. Glass fiber insulated pipes conveying fluids below ambient temperature:

1. Provide vapor barrier jackets, factory-applied or field-applied. Secure with self-sealing longitudinal laps and butt strips with pressure-sensitive adhesive. Secure with outward clinch expanding staples and vapor barrier mastic.
2. Insulate fittings, joints, and valves with molded insulation of like material and thickness as adjacent pipe. Finish with glass cloth and vapor barrier adhesive or PVC fitting covers.

C. Glass fiber insulated pipes conveying fluids above ambient temperature:
1. Provide standard jackets, with or without vapor barrier, factory-applied or field-applied. Secure with self-sealing longitudinal laps and butt strips with pressure-sensitive adhesive. Secure with outward clinch expanding staples.
2. Insulate fittings, joints, and valves with insulation of like material and thickness as adjoining pipe. Finish with glass cloth and adhesive or PVC fitting covers.

D. Inserts and Shields:
1. Application: Piping 1-1/2 inches diameter or larger.
2. Shields: Galvanized steel between pipe hangers or pipe hanger rolls and inserts.
3. Insert Location: Between support shield and piping and under the finish jacket.
4. Insert Configuration: Minimum 6 inches long, of same thickness and contour as adjoining insulation; may be factory fabricated.

E. Continue insulation through walls, sleeves, pipe hangers, and other pipe penetrations. Finish at supports, protrusions, and interruptions. At fire separations, see Section 07 8400.

F. Pipe Exposed in Mechanical Equipment Rooms or Finished Spaces (less than 10 feet above finished floor): Finish with canvas jacket sized for finish painting.

G. Exterior Applications: Provide vapor barrier jacket. Insulate fittings, joints, and valves with insulation of like material and thickness as adjoining pipe, and finish with glass mesh reinforced vapor barrier cement. Cover with aluminum jacket with seams located on bottom side of horizontal piping.

H. Buried Piping: Provide factory fabricated assembly with inner all-purpose service jacket with self-sealing lap, and asphalt impregnated open mesh glass fabric, with one mil, 0.001 inch thick aluminum foil sandwiched between three layers of bituminous compound; outer surface faced with a polyester film.

I. Heat Traced Piping: Insulate fittings, joints, and valves with insulation of like material, thickness, and finish as adjoining pipe. Size large enough to enclose pipe and heat tracer. Cover with aluminum jacket with seams located on bottom side of horizontal piping.

3.03 SCHEDULES

A. Plumbing Systems:
1. Domestic Hot Water and Recirculated Hot Water:
a. Glass Fiber or Flexible Elastomeric Insulation:
1) Pipe Size Range: 1-1/4 inch and below
(a) Thickness: 1 inch.
2) Pipe Size Range: 1-1/2 inch and above
(a) Thickness: 1-1/2 inch.
2. Domestic Cold Water:
a. Glass Fiber or Flexible Elastomeric Insulation:
1) Pipe Size Range: 1-1/4 inch and below
2) Thickness: 1/2 inch.
b. Glass Fiber or Flexible Elastomeric Insulation:
1) Pipe Size Range: 1-1/2 inch and above
2) Thickness: 1 inch.
3. Condensate drain piping:
a. Flexible Elastomeric Insulation:

1) Pipe Size Range: All
2) Thickness: 1/2 inch.

4. Fixtures for the disabled:
   a. Exposed sanitary drains and domestic water supplies and stops for the disabled.
      1) Truebro Handi Lav-Guard Insulation Kit.

END OF SECTION

SECTION 22 1005
PLUMBING PIPING

PART 1 GENERAL

1.01 SECTION INCLUDES

A. Sanitary waste piping, buried within 5 feet of building.

B. Domestic water piping, buried within 5 feet of building.

C. Domestic water piping, above grade.

1.02 RELATED REQUIREMENTS

A. Section 08 3100 - Access Doors and Panels.

B. Section 22 0516 - Expansion Fittings and Loops for Plumbing Piping.

C. Section 22 0548 - Vibration and Seismic Controls for Plumbing Piping and Equipment.

D. Section 22 0553 - Identification for Plumbing Piping and Equipment.

E. Section 31 2316 - Excavation.

F. Section 31 2323 - Fill.

G. Section 33 0110.58 - Disinfection of Water Utility Piping Systems.

1.03 REFERENCE STANDARDS

A. ANSI Z21.22 - American National Standard for Relief Valves for Hot Water Supply Systems 2015 (Reaffirmed 2020).

B. ASME B16.18 - Cast Copper Alloy Solder Joint Pressure Fittings 2021.

C. ASME B16.22 - Wrought Copper and Copper Alloy Solder-Joint Pressure Fittings 2021.

D. ASME B31.9 - Building Services Piping 2020.

E. ASME BPVC-IV - Boiler and Pressure Vessel Code, Section IV - Rules for Construction of Heating Boilers 2021.

F. ASME BPVC-IX - Boiler and Pressure Vessel Code, Section IX - Qualification Standard for Welding, Brazing, and Fusing Procedures; Welders; Brazers; and Welding, Brazing, and Fusing Operators 2021.

G. ASSE 1003 - Performance Requirements for Water Pressure Reducing Valves for Potable Water Distribution Systems 2020.

H. ASTM A74 - Standard Specification for Cast Iron Soil Pipe and Fittings 2021.

I. ASTM A123/A123M - Standard Specification for Zinc (Hot-Dip Galvanized) Coatings on Iron and Steel Products 2017.

J. ASTM B32 - Standard Specification for Solder Metal 2020.

K. ASTM B42 - Standard Specification for Seamless Copper Pipe, Standard Sizes 2020.

L. ASTM B88 - Standard Specification for Seamless Copper Water Tube 2020.

M. ASTM B88M - Standard Specification for Seamless Copper Water Tube (Metric) 2020.

N. ASTM B813 - Standard Specification for Liquid and Paste Fluxes for Soldering of Copper and Copper Alloy Tube 2016.

O. ASTM B828 - Standard Practice for Making Capillary Joints by Soldering of Copper and Copper Alloy Tube and Fittings 2016.

P. ASTM C564 - Standard Specification for Rubber Gaskets for Cast Iron Soil Pipe and Fittings 2020a.

Q. ASTM D2564 - Standard Specification for Solvent Cements for Poly(Vinyl Chloride) (PVC) Plastic Piping Systems 2020.

R. ASTM D2665 - Standard Specification for Poly(Vinyl Chloride) (PVC) Plastic Drain, Waste, and Vent Pipe and Fittings 2020.

S. ASTM D2855 - Standard Practice for the Two-Step (Primer and Solvent Cement) Method of Joining Poly (Vinyl Chloride) (PVC) or Chlorinated Poly (Vinyl Chloride) (CPVC) Pipe and Piping Components with Tapered Sockets 2020.

T. ASTM D3034 - Standard Specification for Type PSM Poly(Vinyl Chloride) (PVC) Sewer Pipe and Fittings 2021.

U. ASTM E84 - Standard Test Method for Surface Burning Characteristics of Building Materials 2022.

V. ASTM F876 - Standard Specification for Crosslinked Polyethylene (PEX) Tubing 2022a, with Editorial Revision.

W. ASTM F1960 - Standard Specification for Cold Expansion Fittings with PEX Reinforcing Rings for Use with Cross-linked Polyethylene (PEX) and Polyethylene of Raised Temperature (PE-RT) Tubing 2021.

X. AWS A5.8M/A5.8 - Specification for Filler Metals for Brazing and Braze Welding 2019.

Y. AWWA C111/A21.11 - Rubber-Gasket Joints for Ductile-Iron Pressure Pipe and Fittings 2017.

Z. AWWA C151/A21.51 - Ductile-Iron Pipe, Centrifugally Cast 2017, with Errata (2018).

AA. AWWA C550 - Protective Interior Coatings for Valves and Hydrants 2017.

BB. AWWA C651 - Disinfecting Water Mains 2014, with Addendum (2020).

CC. CISPI 301 - Standard Specification for Hubless Cast Iron Soil Pipe and Fittings for Sanitary and Storm Drain, Waste, and Vent Piping Applications 2021.

DD. CISPI 310 - Specification for Coupling for Use in Connection with Hubless Cast Iron Soil Pipe and Fittings for Sanitary and Storm Drain, Waste, and Vent Piping Applications 2018.

EE. ICC-ES AC106 - Acceptance Criteria for Predrilled Fasteners (Screw Anchors) in Masonry Elements 2015.

FF. ICC-ES AC308 - Acceptance Criteria for Post-Installed Adhesive Anchors in Concrete Elements 2016.

GG. MSS SP-58 - Pipe Hangers and Supports - Materials, Design, Manufacture, Selection, Application, and Installation 2018, with Amendment (2019).

HH. NSF 61 - Drinking Water System Components - Health Effects 2021.

II. NSF 372 - Drinking Water System Components - Lead Content 2022.

JJ. PPI TR-4 - PPI HSB Listing of Hydrostatic Design Basis (HDB), Hydrostatic Design Stress (HDS), Strength Design Basis (SDB), Pressure Design Basis (PDB) and Minimum Required Strength (MRS) Ratings for Thermoplastic Piping Materials or Pipe 2021.

KK. UL 723 - Standard for Test for Surface Burning Characteristics of Building Materials Current Edition, Including All Revisions.

1.04 SUBMITTALS

A. See Section 01 3000 - Administrative Requirements for submittal procedures.

B. Product Data: Provide data on pipe materials, pipe fittings, valves, and accessories. Provide manufacturers catalog information. Indicate valve data and ratings.

1.05 QUALITY ASSURANCE

A. Perform work in accordance with applicable codes.

B. Valves: Manufacturer's name and pressure rating marked on valve body.

C. Welding Materials and Procedures: Comply with ASME BPVC-IX and applicable state labor regulations.

D. Welder Qualifications: Certified in accordance with ASME BPVC-IX.

E. Identify pipe with marking including size, ASTM material classification, ASTM specification, potable water certification, water pressure rating.

1.06 DELIVERY, STORAGE, AND HANDLING

A. Accept valves on site in shipping containers with labeling in place. Inspect for damage.

B. Provide temporary protective coating on cast iron and steel valves.

C. Provide temporary end caps and closures on piping and fittings. Maintain in place until installation.

D. Protect piping systems from entry of foreign materials by temporary covers, completing sections of the work, and isolating parts of completed system.

1.07 FIELD CONDITIONS

A. Do not install underground piping when bedding is wet or frozen.

PART 2 PRODUCTS

2.01 GENERAL REQUIREMENTS

A. Potable Water Supply Systems: Provide piping, pipe fittings, and solder and flux (if used), that comply with NSF 61 and NSF 372 for maximum lead content; label pipe and fittings.

B. Plenum-Installed Acid Waste Piping: Flame-spread index equal or below 25 and smoke-spread index equal or below 50 according to ASTM E84 or UL 723 tests.

2.02 SANITARY WASTE PIPING, BURIED WITHIN 5 FEET OF BUILDING

A. Cast Iron Pipe: ASTM A74 service weight.
   1. Fittings: Cast iron.
   2. Joints: Hub-and-spigot, CISPI HSN compression type with ASTM C564 neoprene gaskets or lead and oakum.

B. PVC Pipe: ASTM D2665 or ASTM D3034.
   1. Fittings: PVC.
   2. Joints: Solvent welded, with ASTM D2564 solvent cement.

2.03 SANITARY WASTE PIPING, ABOVE GRADE

A. Cast Iron Pipe: CISPI 301, hubless, service weight.
   1. Fittings: Cast iron.
   2. Joints: CISPI 310, neoprene gaskets and stainless steel clamp-and-shield assemblies.

B. PVC Pipe: ASTM D2665.
   1. Fittings: PVC.
   2. Joints: Solvent welded, with ASTM D2564 solvent cement.

2.04 DOMESTIC WATER PIPING, BURIED WITHIN 5 FEET OF BUILDING

A. Copper Pipe: ASTM B42, hard drawn.
   1. Fittings: ASME B16.18, cast copper alloy or ASME B16.22 wrought copper and bronze.
   2. Joints: AWS A5.8M/A5.8, BCuP copper/silver braze.

B. Ductile Iron Pipe: AWWA C151/A21.51.
   1. Fittings: Ductile or gray iron, standard thickness.
   2. Joints: AWWA C111/A21.11, styrene butadiene rubber (SBR) or vulcanized SBR gasket with 3/4 inch diameter rods.

2.05 DOMESTIC WATER PIPING, ABOVE GRADE

A. Copper Tube: ASTM B88 (ASTM B88M), Type L (B), Drawn (H).
   1. Fittings: ASME B16.22, wrought copper.
   2. Joints: ASTM B32, alloy Sn95 solder.

B. Cross-Linked Polyethylene (PEX) Pipe: ASTM F876 or ASTM F877.
   1. Manufacturers:
      a. SharkBite, a brand of Reliance Worldwide Corporation: www.sharkbite.com/#sle.
      b. Uponor, Inc: www.uponorengineering.com/#sle.
      c. Viega LLC: www.viega.us/#sle.
      d. Zurn Industries, LLC: www.zurn.com/#sle.
      e. Substitutions: See Section 01 6000 - Product Requirements.
   2. PPI TR-4 Pressure Design Basis:
      a. 80 psig at maximum 200 degrees F.
   3. Fittings: Brass and copper.
   4. Fittings: Brass and engineered polymer (EP) ASTM F1960.
   5. Joints: Mechanical compression fittings.
   6. Joints: ASTM F1960 cold-expansion fittings.

2.06 PIPE FLANGES, UNIONS, AND COUPLINGS

A. Unions for Pipe Sizes 3 inch and Under:
   1. Ferrous Pipe: Class 150 malleable iron threaded unions.
   2. Copper Tube and Pipe: Class 150 bronze unions with soldered joints.

B. Flanges for Pipe Sizes Over 1 inch:
   1. Ferrous Pipe: Class 150 malleable iron threaded or forged steel slip-on flanges; preformed neoprene gaskets.
   2. Copper Tube and Pipe: Class 150 slip-on bronze flanges; preformed neoprene gaskets.

C. Dielectric Connections: Union with galvanized or plated steel threaded end, copper solder end, water impervious isolation barrier.

2.07 PIPE HANGERS AND SUPPORTS

A. Provide hangers and supports that comply with MSS SP-58.
   1. If type of hanger or support for a particular situation is not indicated, select appropriate type using MSS SP-58 recommendations.
   2. Overhead Supports: Individual steel rod hangers attached to structure or to trapeze hangers.
   3. Trapeze Hangers: Welded steel channel frames attached to structure.
   4. Vertical Pipe Support: Steel riser clamp.
   5. Floor Supports: Concrete pier or steel pedestal with floor flange; fixture attachment.
   6. Rooftop Supports for Low-Slope Roofs: Steel pedestals with bases that rest on top of roofing membrane, not requiring any attachment to the roof structure and not penetrating the roofing assembly, with support fixtures as specified; and as follows:
      a. Bases: High-density polypropylene.
      b. Base Sizes: As required to distribute load sufficiently to prevent indentation of roofing assembly.
      c. Steel Components: Stainless steel or carbon steel hot-dip galvanized after fabrication in accordance with ASTM A123/A123M.
      d. Attachment/Support Fixtures: As recommended by manufacturer, same type as indicated for equivalent indoor hangers and supports; corrosion-resistant material.
      e. Height: Provide minimum clearance of 6 inches under pipe to top of roofing.
      f. Manufacturers:
         1) PHP Systems/Design: www.phpsd.com/#sle.
         2) Miro Industries..

B. Plumbing Piping - Drain, Waste, and Vent:
   1. Hangers for Pipe Sizes 1/2 to 1-1/2 inch: Malleable iron, adjustable swivel, split ring.
   2. Hangers for Pipe Sizes 2 inch and Over: Carbon steel, adjustable, clevis.

3. Wall Support for Pipe Sizes to 3 inch: Cast iron hook.
4. Wall Support for Pipe Sizes 4 inch and Over: Welded steel bracket and wrought steel clamp.
5. Floor Support: Cast iron adjustable pipe saddle, lock nut, nipple, floor flange, and concrete pier or steel support.
6. Copper Pipe Support: Carbon steel ring, adjustable, copper plated.

C. Plumbing Piping - Water:
1. Hangers for Pipe Sizes 1/2 to 1-1/2 inch: Malleable iron, adjustable swivel, split ring.
2. Hangers for Cold Pipe Sizes 2 inch and Over: Carbon steel, adjustable, clevis.
3. Hangers for Hot Pipe Sizes 2 to 4 inch: Carbon steel, adjustable, clevis.
4. Hangers for Hot Pipe Sizes 6 inch and Larger: Adjustable steel yoke, cast iron pipe roll, double hanger.
5. Wall Support for Pipe Sizes Up to 3 inch: Cast iron hook.
6. Wall Support for Pipe Sizes 4 inch and Larger: Welded steel bracket and wrought steel clamp.
7. Wall Support for Hot Pipe Sizes 6 inch and Larger: Welded steel bracket and wrought steel clamp with adjustable steel yoke and cast iron pipe roll.
8. Floor Support for Cold Pipe: Cast iron adjustable pipe saddle, lock nut, nipple, floor flange, and concrete pier or steel support.
9. Floor Support for Hot Pipe Sizes to 4 inch: Cast iron adjustable pipe saddle, locknut, nipple, floor flange, and concrete pier or steel support.
10. Floor Support for Hot Pipe Sizes 6 inch and Larger: Adjustable cast iron pipe roll and stand, steel screws, and concrete pier or steel support.
11. Copper Pipe Support: Carbon steel ring, adjustable, copper plated.

D. Hanger Fasteners: Attach hangers to structure using appropriate fasteners, as follows:
1. Concrete Wedge Expansion Anchors: Comply with ICC-ES AC193.
2. Masonry Wedge Expansion Anchors: Comply with ICC-ES AC01.
3. Concrete Screw Type Anchors: Comply with ICC-ES AC193.
4. Masonry Screw Type Anchors: Comply with ICC-ES AC106.
5. Concrete Adhesive Type Anchors: Comply with ICC-ES AC308.
6. Other Types: As required.

2.08 PIPE SLEEVE-SEAL SYSTEMS

A. Manufacturers:
1. The Metraflex Company; MetraSeal: www.metraflex.com/#sle.

B. Modular Mechanical Seals:
1. Elastomer-based interlocking links continuously fill annular space between pipe and wall-sleeve, wall or casing opening.
2. Watertight seal between pipe and wall-sleeve, wall or casing opening.
3. Size and select seal component materials in accordance to service requirements.
4. Glass reinforced plastic pressure end plates.

2.09 PIPING SPECIALTIES

A. Flow Controls:
1. Manufacturers:
a. ITT Bell & Gossett: www.bellgossett.com/#sle.
b. Griswold Controls: www.griswoldcontrols.com/#sle.
c. Taco, Inc: www.taco-hvac.com/#sle.

2.10 PRESSURE REDUCING VALVES

A. Manufacturers:
1. Amtrol Inc: www.amtrol.com.
2. Cla-Val Company: www.cla-val.com.

3. Watts Regulator Company: www.wattsregulator.com.

B. 2 inch and Smaller:
   1. ASSE 1003, bronze body, stainless steel, and thermoplastic internal parts, fabric reinforced diaphragm, strainer, threaded single union ends.
   2. Pressure Reducing Pilot-Operator:
      a. Operating Range: 5 to 50 psi.
      b. Connected into brass or bronze pilot piping and fittings.
      c. Fixed flow restrictor, pressure gauges, and isolation valves.

C. 2-1/2 inch and Larger:
   1. ASSE 1003, cast iron body with interior lining complying with AWWA C550, bronze fitted, elastomeric diaphragm and seat disc, flanged.
   2. Pressure Reducing Pilot-Operator:
      a. Operating Range: 5 to 50 psi.
      b. Connected into brass or bronze pilot piping and fittings.
      c. Fixed flow restrictor, strainer, pressure gauges, and isolation valves.

2.11 PRESSURE RELIEF VALVES

A. ANSI Z21.22, AGA certified, bronze body, teflon seat, steel stem and springs, automatic, direct pressure actuated.

2.12 STRAINERS

A. Manufacturers:
   1. Armstrong International, Inc: www.armstronginternational.com.
   2. Green Country Filter Manufacturing: www.greencountryfilter.com.
   3. WEAMCO: www.weamco.com.

B. Size 2 inch and Smaller:
   1. Threaded brass body for 175 psi CWP, Y pattern with 1/32 inch stainless steel perforated screen.
   2. Class 150, threaded bronze body 300 psi CWP, Y pattern with 1/32 inch stainless steel perforated screen.

C. Size 1-1/2 inch to 4 inch:
   1. Class 125, flanged iron body, Y pattern with 1/16 inch stainless steel perforated screen.

PART 3 EXECUTION

3.01 EXAMINATION

A. Verify that excavations are to required grade, dry, and not over-excavated.

3.02 PREPARATION

A. Ream pipe and tube ends. Remove burrs. Bevel plain end ferrous pipe.

B. Remove scale and dirt, on inside and outside, before assembly.

C. Prepare piping connections to equipment with flanges or unions.

3.03 INSTALLATION

A. Install in accordance with manufacturer's instructions.

B. Provide non-conducting dielectric connections wherever jointing dissimilar metals.

C. Route piping in orderly manner and maintain gradient. Route parallel and perpendicular to walls.

D. Install piping to maintain headroom, conserve space, and not interfere with use of space.

E. Group piping whenever practical at common elevations.

F. Install piping to allow for expansion and contraction without stressing pipe, joints, or connected equipment. See Section 22 0516.

G. Provide clearance in hangers and from structure and other equipment for installation of insulation and access to valves and fittings.

H. Provide access where valves and fittings are not exposed.
   1. Coordinate size and location of access doors with Section 08 3100.

I. Establish elevations of buried piping outside the building to ensure not less than 3 ft of cover.

J. Install vent piping penetrating roofed areas to maintain integrity of roof assembly; refer to Section.

K. Where pipe support members are welded to structural building framing, scrape, brush clean, and apply one coat of zinc-rich primer to welding.

L. Provide support for utility meters in accordance with requirements of utility companies.

M. Prepare exposed, unfinished pipe, fittings, supports, and accessories for finish painting.

N. Excavate in accordance with Section 31 2316.

O. Backfill in accordance with Section 31 2323.

P. Install bell and spigot pipe with bell end upstream.

Q. Install valves with stems upright or horizontal, not inverted. See Section 22 0523.

R. Install water piping to ASME B31.9.

S. Copper Pipe and Tube: Make soldered joints in accordance with ASTM B828, using specified solder, and flux meeting ASTM B813; in potable water systems use flux also complying with NSF 61 and NSF 372.

T. PVC Pipe: Make solvent-welded joints in accordance with ASTM D2855.

U. Sleeve pipes passing through partitions, walls, and floors.

V. Inserts:
   1. Provide inserts for placement in concrete formwork.
   2. Provide inserts for suspending hangers from reinforced concrete slabs and sides of reinforced concrete beams.
   3. Provide hooked rod to concrete reinforcement section for inserts carrying pipe over 4 inches.
   4. Where concrete slabs form finished ceiling, locate inserts flush with slab surface.
   5. Where inserts are omitted, drill through concrete slab from below and provide through-bolt with recessed square steel plate and nut above slab.

W. Pipe Hangers and Supports:
   1. Install in accordance with ASME B31.9.
   2. Support horizontal piping as indicated.
   3. Install hangers to provide minimum 1/2 inch space between finished covering and adjacent work.
   4. Place hangers within 12 inches of each horizontal elbow.
   5. Use hangers with 1-1/2 inch minimum vertical adjustment. Design hangers for pipe movement without disengagement of supported pipe.
   6. Support vertical piping at every other floor. Support riser piping independently of connected horizontal piping.
   7. Where several pipes can be installed in parallel and at same elevation, provide multiple or trapeze hangers.
   8. Prime coat exposed steel hangers and supports. Hangers and supports located in crawl spaces, pipe shafts, and suspended ceiling spaces are not considered exposed.
   9. Provide hangers adjacent to motor-driven equipment with vibration isolation; see Section 22 0548.
   10. Support cast iron drainage piping at every joint.

X. Pipe Sleeve-Seal Systems:

1. Install manufactured sleeve-seal systems in sleeves located in grade slabs and exterior concrete walls at piping entrances into building.
2. Provide sealing elements of the size, quantity, and type required for the piping and sleeve inner diameter or penetration diameter.
3. Locate piping in center of sleeve or penetration.
4. Install field assembled sleeve-seal system components in annular space between sleeve and piping.
5. Tighten bolting for a watertight seal.
6. Install in accordance with manufacturer's recommendations.

Y. When installing more than one piping system material, ensure system components are compatible and joined to ensure the integrity of the system. Provide necessary joining fittings. Ensure flanges, union, and couplings for servicing are consistently provided.

3.04 APPLICATION

A. Install unions downstream of valves and at equipment or apparatus connections.

B. Install brass male adapters each side of valves in copper piped system. Solder adapters to pipe.

C. Install gate valves for shut-off and to isolate equipment, part of systems, or vertical risers.

D. Install globe valves for throttling, bypass, or manual flow control services.

E. Provide lug end butterfly valves adjacent to equipment when provided to isolate equipment.

F. Provide spring-loaded check valves on discharge of water pumps.

G. Provide flow controls in water recirculating systems where indicated.

3.05 TOLERANCES

A. Drainage Piping: Establish invert elevations within 1/2 inch vertically of location indicated and slope to drain at minimum of 1/4 inch per foot slope downward in the direction of flow for piping 2" and smaller and 1/8 inch per foot slope downward in the direction of flow for piping 3" and larger.

B. Water Piping: Slope at minimum of 1/32 inch per foot and arrange to drain at low points.

3.06 DISINFECTION OF DOMESTIC WATER PIPING SYSTEM

A. Disinfect water distribution system in accordance with Section 33 0110.58.

B. Prior to starting work, verify system is complete, flushed, and clean.

C. Ensure acidity (pH) of water to be treated is between 7.4 and 7.6 by adding alkali (caustic soda or soda ash) or acid (hydrochloric).

D. Inject disinfectant, free chlorine in liquid, powder, tablet, or gas form throughout system to obtain 50 to 80 mg/L residual.

E. Bleed water from outlets to ensure distribution and test for disinfectant residual at minimum 15 percent of outlets.

F. Maintain disinfectant in system for 24 hours.

G. If final disinfectant residual tests less than 25 mg/L, repeat treatment.

H. Flush disinfectant from system until residual equal to that of incoming water or 1.0 mg/L.

I. Take samples no sooner than 24 hours after flushing, from 10 percent of outlets and from water entry, and analyze in accordance with AWWA C651.

3.07 SERVICE CONNECTIONS

A. Provide new sanitary sewer services. Before commencing work, check invert elevations required for sewer connections, confirm inverts and ensure that these can be properly connected with slope for drainage and cover to avoid freezing.

B. Provide new water service complete with approved reduced pressure backflow preventer and water meter with by-pass valves, pressure reducing valve, and sand strainer.
   1. Provide sleeve in wall for service main and support at wall with reinforced concrete bridge. Calk enlarged sleeve and make watertight with pliable material. Anchor service main inside to concrete wall.
   2. Provide 18 gauge, 0.0478-inch galvanized sheet metal sleeve around service main to 6 inch above floor and 6 feet minimum below grade. Size for minimum of 2 inches of loose batt insulation stuffing.

3.08 SCHEDULES

A. Pipe Hanger Spacing:
   1. Metal Piping:
      a. Pipe Size: 1/2 inch to 1-1/4 inch:
         1) Maximum Hanger Spacing: 6.5 ft.
         2) Hanger Rod Diameter: 3/8 inches.
      b. Pipe Size: 1-1/2 inch to 2 inch:
         1) Maximum Hanger Spacing: 10 ft.
         2) Hanger Rod Diameter: 3/8 inch.
      c. Pipe Size: 2-1/2 inch to 3 inch:
         1) Maximum Hanger Spacing: 10 ft.
         2) Hanger Rod Diameter: 1/2 inch.
      d. Pipe Size: 4 inch to 6 inch:
         1) Maximum Hanger Spacing: 10 ft.
         2) Hanger Rod Diameter: 5/8 inch.
      e. Pipe Size: 8 inch to 12 inch:
         1) Maximum hanger spacing: 14 ft.
         2) Hanger Rod Diameter: 7/8 inch.
      f. Pipe Size: 14 inch and Over:
         1) Maximum Hanger Spacing: 20 ft.
         2) Hanger Rod Diameter: 1 inch.

END OF SECTION

SECTION 22 1006
PLUMBING PIPING SPECIALTIES

PART 1 GENERAL

1.01 SECTION INCLUDES

A. Drains.

B. Cleanouts.

C. Hose bibbs.

D. Hydrants.

E. Washing machine boxes and valves.

F. Refrigerator valve and recessed box.

G. Backflow preventers.

H. Double check valve assemblies.

I. Water hammer arrestors.

J. Sanitary waste interceptors.

K. Mixing valves.

1.02 RELATED REQUIREMENTS

A. Section 22 1005 - Plumbing Piping.

B. Section 22 3000 - Plumbing Equipment.

C. Section 22 4000 - Plumbing Fixtures.

1.03 REFERENCE STANDARDS

A. ASME A112.6.4 - Roof, Deck, and Balcony Drains 2003 (Reaffirmed 2012).

B. ASSE 1011 - Performance Requirements for Hose Connection Vacuum Breakers 2017.

C. ASSE 1012 - Performance Requirements for Backflow Preventers with an Intermediate Atmospheric Vent 2021.

D. ASSE 1013 - Performance Requirements for Reduced Pressure Principle Backflow Prevention Assemblies 2021.

E. ASSE 1015 - Performance Requirements for Double Check Backflow Prevention Assemblies 2021.

F. ASSE 1019 - Performance Requirements for Wall Hydrant with Backflow Protection and Freeze Resistance 2011 (Reaffirmed 2016).

G. NSF 61 - Drinking Water System Components - Health Effects 2021.

H. NSF 372 - Drinking Water System Components - Lead Content 2022.

I. PDI-WH 201 - Water Hammer Arresters 2017.

1.04 SUBMITTALS

A. See Section 01 3000 - Administrative Requirements for submittal procedures.

B. Product Data: Provide component sizes, rough-in requirements, service sizes, and finishes.

C. Maintenance Data: Include installation instructions, spare parts lists, exploded assembly views.

PART 2 PRODUCTS

2.01 GENERAL REQUIREMENTS

A. Specialties in Potable Water Supply Systems: Provide products that comply with NSF 61 and NSF 372 for maximum lead content.

2.02 DRAINS

A. Refer to Plumbing Schedules on Drawings for Drain and Cleanout descriptions.

B. Manufacturers:
   1. Jay R. Smith Manufacturing Company: www.jayrsmith.com.
   2. Josam Company: www.josam.com.
   3. Noble Company; FreeStyle Linear Drain: www.noblecompany.com/#sle.
   4. Wade: www.wadedrains.com.
   5. Zurn Industries, LLC: www.zurn.com.
   6. Roof Drains:
      a. Assembly: ASME A112.6.4.
      b. Body: Lacquered cast iron with sump.
      c. Strainer: Removable polyethylene dome with vandal proof screws.
      d. Accessories: Coordinate with roofing type:
         1) Membrane flange and membrane clamp with integral gravel stop.
         2) Adjustable under deck clamp.
         3) Roof sump receiver.
         4) Waterproofing flange.
         5) Controlled flow weir.
         6) Leveling frame.
         7) Adjustable extension sleeve for roof insulation.
   7. Roof Overflow Drains:
      a. Lacquered cast iron body and clamp collar and bottom clamp ring; pipe extended to 2 inches above flood elevation.
   8. Downspout Nozzles:
      a. Bronze round with straight bottom section.
   9. Floor Drains and Sinks: Refer to schedules.

2.03 CLEANOUTS

A. Manufacturers:
   1. Jay R. Smith Manufacturing Company: www.jayrsmith.com.
   2. Josam Company: www.josam.com.
   3. Watts: www.watts.com.
   4. Zurn Industries, LLC: www.zurn.com.

B. Cleanouts at Exterior Surfaced Areas:
   1. Round cast nickel bronze access frame and non-skid cover.

C. Cleanouts at Exterior Unsurfaced Areas:
   1. Line type with lacquered cast iron body and round epoxy coated gasketed cover.

D. Cleanouts at Interior Finished Floor Areas:
   1. Lacquered cast iron body with anchor flange, reversible clamping collar, threaded top assembly, and round gasketed scored cover in service areas and round gasketed depressed cover to accept floor finish in finished floor areas.

E. Cleanouts at Interior Finished Wall Areas:
   1. Line type with lacquered cast iron body and round epoxy coated gasketed cover, and round stainless steel access cover secured with machine screw.

F. Cleanouts at Interior Unfinished Accessible Areas (CO-5): Calked or threaded type. Provide bolted stack cleanouts on vertical rainwater leaders.

2.04 HOSE BIBBS

A. Manufacturers:

1. Jay R. Smith Manufacturing Company: www.jayrsmith.com.
2. Watts Regulator Company: www.wattsregulator.com.
3. Zurn Industries, LLC: www.zurn.com.

B. Interior Hose Bibbs:
1. Bronze or brass with integral mounting flange, replaceable hexagonal disc, hose thread spout, chrome-plated where exposed with handwheel, integral vacuum breaker in compliance with ASSE 1011.

2.05 HYDRANTS

A. Manufacturers:
1. Arrowhead Brass & Plumbing, LLC: www.arrowheadbrass.com.
2. Jay R. Smith Manufacturing Company: www.jayrsmith.com.
3. Woodford: www.woodfordmfg.com.
4. Zurn Industries, LLC: www.zurn.com/#sle.

B. Wall Hydrants:
1. ASSE 1019; freeze resistant, self-draining type with chrome-plated wall plate hose thread spout, handwheel, and integral vacuum breaker.

2.06 WASHING MACHINE BOXES AND VALVES

A. Box Manufacturers:
1. IPS Corporation/Water-Tite: www.ipscorp.com.
2. Oatey Supply Chain Services, Inc: www.oatey.com.

B. Valve Manufacturers:
1. IPS Corporation/Water-Tite: www.ipscorp.com.
2. Zurn Industries, LLC: www.zurn.com.

C. Description: Plastic preformed rough-in box with brass long shank valves with wheel handles, socket for 2 inch waste, slip in finishing cover.

2.07 REFRIGERATOR VALVE AND RECESSED BOX

A. Box Manufacturers:
1. IPS Corporation/Water-Tite: www.ipscorp.com/#sle.
2. Oatey Supply Chain Services, Inc: www.oatey.com/#sle.

B. Valve Manufacturers:
1. IPS Corporation/Water-Tite: www.ipscorp.com/#sle.
2. Zurn Industries, LLC: www.zurn.com/#sle.

C. Description: Plastic preformed rough-in box with brass valves with wheel handle, slip in finishing cover.

2.08 BACKFLOW PREVENTERS

A. Manufacturers:
1. Conbraco Industries, Inc: www.apollovalves.com.
2. Watts Regulator Company, a part of Watts Water Technologies: www.wattsregulator.com.
3. Zurn Industries, LLC: www.zurn.com.

B. Reduced Pressure Backflow Preventer Assembly:
1. ASSE 1013; cast bronze body and stainless steel springs; two independently operating, spring loaded check valves; diaphragm type differential pressure relief valve located between check valves; third check valve that opens under back pressure in case of diaphragm failure, and non-threaded vent outlet.
2. Size: assembly with threaded gate valves.
3. Maximum Working Parameters: 175 psi at 180 degrees F.
4. Accessories: Provide air gap fitting, lead-free Y-strainer, and test cocks.

2.09 DOUBLE CHECK-VALVE ASSEMBLIES

A. Manufacturers:
1. Conbraco Industries, Inc: www.apollovalves.com.
2. Watts Regulator Company, a part of Watts Water Technologies: www.wattsregulator.com.
3. Zurn Industries, LLC: www.zurn.com.

B. Double Check Valve Assembly:
1. ASSE 1012; cast bronze body with corrosion resistant internal parts and stainless steel springs; two independently operating check valves with intermediate atmospheric vent.
2. Size: 3/4 to 2 inch, NPS assembly with threaded full port ball valves.
3. Maximum Working Parameters: 175 psi at 180 degrees F.
4. Accessories: Provide lead-free Y-strainer and pit-mounted protective enclosure.

C. Double Check Valve Assembly:
1. ASSE 1015 and NSF 61 compliant stainless steel body assembly with corrosion resistant internal parts, stainless steel springs, intermediate atmospheric vent, two independently-operating check valves, and test-cock plug for horizontal or vertical mount.
2. Configured to protect against backsiphonage and backpressure into potable water supply.
3. Size: 2-1/2 to 10 inch assembly with flanged OS&Y gate valves.
4. Maximum Working Parameters: 175 psi at 140 degrees F.
5. Accessories: Provide flanged Y-strainer and test cock.

2.10 WATER HAMMER ARRESTORS

A. Manufacturers:
1. Jay R. Smith Manufacturing Company: www.jayrsmith.com.
2. Watts Regulator Company, a part of Watts Water Technologies: www.wattsregulator.com.
3. Zurn Industries, LLC: www.zurn.com.

B. Water Hammer Arrestors:
1. Stainless steel construction, bellows type sized in accordance with PDI-WH 201, precharged suitable for operation in temperature range minus 100 to 300 degrees F and maximum 250 psi working pressure.

2.11 SANITARY WASTE INTERCEPTORS

A. Manufacturers:
1. Jay R. Smith Manufacturing Company: www.jrsmith.com.
2. Watts: www.watts.com.
3. Zurn Industries, LLC: www.zurn.com.

B. Grease Interceptors:
1. Construction:
a. Material: Epoxy-coated fabricated steel.
b. Rough-in: Fully recessed (shallow rough-in) with anchor flange.
c. Cover: Steel, epoxy coated, non-skid with gasket, securing handle, and enzyme injection port, recessed for floor finish.

2.12 MIXING VALVES

A. Thermostatic Mixing Valves:
1. Manufacturers:
a. ESBE: www.esbe.se/en.
b. Honeywell International Inc: yourhome.honeywell.com.
c. Leonard Valve Company: www.leonardvalve.com.
d. Symmons..
e. Acorn.

2. Valve: Chrome-plated cast brass body, stainless steel or copper alloy bellows, integral temperature adjustment.

PART 3 EXECUTION

3.01 INSTALLATION

A. Install in accordance with manufacturer's instructions.

B. Extend cleanouts to finished floor or wall surface. Lubricate threaded cleanout plugs with mixture of graphite and linseed oil. Ensure clearance at cleanout for rodding of drainage system.

C. Encase exterior cleanouts in concrete flush with grade.

D. Install floor cleanouts at elevation to accommodate finished floor.

E. Install approved potable water protection devices on plumbing lines where contamination of domestic water may occur; on boiler feed water lines, janitor rooms, fire sprinkler systems, premise isolation, irrigation systems, flush valves, interior and exterior hose bibbs.

F. Pipe relief from backflow preventer to nearest drain.

G. Install water hammer arrestors complete with accessible isolation valve on hot and cold water supply piping to lavatory sinks or washing machine outlets.

H. Install air chambers on hot and cold water supply piping to each fixture or group of fixtures (each washroom). Fabricate same size as supply pipe or 3/4 inch minimum, and minimum 18 inches long.

I. For any equipment supplied with NFC (Near Field communication) enabled chip the chip must be intact and operable when turned over to the owner. If damaged during construction chip shall be replaced with new.

END OF SECTION

SECTION 22 1123
FACILITY NATURAL-GAS PIPING

PART 1 GENERAL

1.01 SECTION INCLUDES

A. Pipe, pipe fittings, valves, and connections for natural gas piping systems.

1.02 REFERENCE STANDARDS

A. ANSI Z21.18/CSA 6.3 - Gas Appliance Pressure Regulators 2019.

B. ANSI Z21.80/CSA 6.22 - Line Pressure Regulators 2019.

C. ANSI Z223.1 - National Fuel Gas Code 2021.

D. ASME BPVC-IX - Boiler and Pressure Vessel Code, Section IX - Qualification Standard for Welding, Brazing, and Fusing Procedures; Welders; Brazers; and Welding, Brazing, and Fusing Operators 2021.

E. ASME B16.3 - Malleable Iron Threaded Fittings: Classes 150 and 300 2021.

F. ASME B31.1 - Power Piping 2020.

G. ASME B31.9 - Building Services Piping 2020.

H. ASTM A53/A53M - Standard Specification for Pipe, Steel, Black and Hot-Dipped, Zinc-Coated, Welded and Seamless 2020.

I. ASTM A234/A234M - Standard Specification for Piping Fittings of Wrought Carbon Steel and Alloy Steel for Moderate and High Temperature Service 2019.

J. AWWA C105/A21.5 - Polyethylene Encasement for Ductile-Iron Pipe Systems 2018.

K. ICC-ES AC01 - Acceptance Criteria for Expansion Anchors in Masonry Elements 2015.

L. ICC-ES AC106 - Acceptance Criteria for Predrilled Fasteners (Screw Anchors) in Masonry Elements 2015.

M. ICC-ES AC193 - Acceptance Criteria for Mechanical Anchors in Concrete Elements 2015.

N. ICC-ES AC308 - Acceptance Criteria for Post-Installed Adhesive Anchors in Concrete Elements 2016.

O. MSS SP-78 - Gray Iron Plug Valves, Flanged and Threaded Ends 2011.

P. MSS SP-110 - Ball Valves Threaded, Socket-Welding, Solder Joint, Grooved and Flared Ends 2010, with Errata .

1.03 SUBMITTALS

A. See Section 01 3000 - Administrative Requirements, for submittal procedures.

B. Product Data: Provide data on pipe materials, pipe fittings, valves, and accessories. Provide manufacturers catalog information. Indicate valve data and ratings.

1.04 QUALITY ASSURANCE

A. Perform work in accordance with applicable codes.

B. Valves: Manufacturer's name and pressure rating marked on valve body.

C. Welding Materials and Procedures: Conform to ASME BPVC-IX and applicable state labor regulations.

D. Welder Qualifications: Certified in accordance with ASME BPVC-IX.

E. Identify pipe with marking including size, ASTM material classification, and ASTM specification.

1.05 DELIVERY, STORAGE, AND HANDLING

A. Accept valves on site in shipping containers with labeling in place. Inspect for damage.

B. Provide temporary protective coating on cast iron and steel valves.

C. Provide temporary end caps and closures on piping and fittings. Maintain in place until installation.

D. Protect piping systems from entry of foreign materials by temporary covers, completing sections of the work, and isolating parts of completed system.

1.06 FIELD CONDITIONS

A. Do not install underground piping when bedding is wet or frozen.

PART 2 PRODUCTS

2.01 NATURAL GAS PIPING, BURIED WITHIN 5 FEET OF BUILDING

A. Steel Pipe: ASTM A53/A53M, Schedule 40 black.
   1. Fittings: ASTM A234/A234M, wrought steel welding type.
   2. Joints: ANSI Z223.1, welded.
   3. Jacket: AWWA C105/A21.5 polyethylene jacket or double layer, half-lapped 10 mil polyethylene tape.

2.02 NATURAL GAS PIPING, ABOVE GRADE

A. Steel Pipe: ASTM A53/A53M, Schedule 40 black.
   1. Fittings: ASME B16.3, malleable iron, or ASTM A234/A234M, wrought steel welding type.
   2. Joints: Threaded or welded to ASME B31.1.

2.03 FLANGES, UNIONS, AND COUPLINGS

A. Unions for Pipe Sizes 3 Inches and Under:
   1. Ferrous pipe: Class 150 malleable iron threaded unions.

B. Flanges for Pipe Size Over 1 Inch:
   1. Ferrous Pipe: Class 150 malleable iron threaded or forged steel slip-on flanges; preformed neoprene gaskets.

C. Dielectric Connections: Union with galvanized or plated steel threaded end, copper solder end, water impervious isolation barrier.

2.04 PIPE HANGERS AND SUPPORTS

A. Provide hangers and supports that comply with MSS SP-58.
   1. If type of hanger or support for a particular situation is not indicated, select appropriate type using MSS SP-58 recommendations.
   2. Overhead Supports: Individual steel rod hangers attached to structure or to trapeze hangers.
   3. Trapeze Hangers: Welded steel channel frames attached to structure.
   4. Vertical Pipe Support: Steel riser clamp.

B. Hanger Fasteners: Attach hangers to structure using appropriate fasteners, as follows:
   1. Concrete Wedge Expansion Anchors: Complying with ICC-ES AC193.
   2. Masonry Wedge Expansion Anchors: Complying with ICC-ES AC01.
   3. Concrete Screw Type Anchors: Complying with ICC-ES AC193.
   4. Masonry Screw Type Anchors: Complying with ICC-ES AC106.
   5. Concrete Adhesive Type Anchors: Complying with ICC-ES AC308.
   6. Other Types: As required.

2.05 BALL VALVES

A. Manufacturers:
   1. Conbraco Industries, Inc: www.apollovalves.com.
   2. Grinnell Products, a Tyco Business: www.grinnell.com.
   3. Milwaukee Valve Company: www.milwaukeevalve.com.
   4. Nibco, Inc: www.nibco.com.

B. Construction, 4 Inches and Smaller: MSS SP-110, Class 150, 400 psi CWP, bronze body, chrome plated brass ball, regular port, Teflon seats and stuffing box ring, blow-out proof stem, lever handle with

balancing stops, threaded ends with union.

2.06 PLUG VALVES

A. Construction 2-1/2 Inches and Larger: MSS SP-78, 175 psi CWP, cast iron body and plug, pressure lubricated, Teflon or Buna N packing, flanged ends. Provide lever operator with set screw.

2.07 STRAINERS

A. Manufacturers:
   1. Armstrong International, Inc: www.armstronginternational.com.
   2. Green Country Filter Manufacturing: www.greencountryfilter.com.
   3. WEAMCO: www.weamco.com.

B. Size 2 inch and Under:
   1. Threaded brass body for 175 psi CWP, Y pattern with 1/32 inch stainless steel perforated screen.
   2. Class 150, threaded bronze body 300 psi CWP, Y pattern with 1/32 inch stainless steel perforated screen.

C. Size 1-1/2 inch to 4 inch:
   1. Class 125, flanged iron body, Y pattern with 1/16 inch stainless steel perforated screen.

D. Size 5 inch and Larger:
   1. Class 125, flanged iron body, basket pattern with 1/8 inch stainless steel perforated screen.

2.08 LINE PRESSURE REGULATORS AND APPLIANCE REGULATORS INDICATORS

A. Manufacturers:
   1. Actaris Metering Systems (A brand of ITT Controls): www.actaris-metering-systems.com.
   2. Dungs Combustion Controls: www.dungs.com.
   3. Maxitrol Company: www.maxitrol.com.

B. Compliance Requirements:
   1. Appliance Regulator: ANSI Z21.18/CSA 6.3.
   2. Line Pressure Regulator: ANSI Z21.80/CSA 6.22.

C. Materials in Contact With Gas:
   1. Housing: Aluminum, steel (free of non-ferrous metals).
   2. Seals and Diaphragms: NBR-based rubber.

D. Maximum Inlet Operating Pressure: 10 psi.
   1. Appliance Regulator: 5 psi.
   2. Line Pressure Regulator: 10 psi.

E. Maximum Body Pressure: 10 psi.

F. Output Pressure Range: 1 inch wc to 80 inch wc.

PART 3 EXECUTION

3.01 EXAMINATION

A. Verify that excavations are to required grade, dry, and not over-excavated.

3.02 PREPARATION

A. Ream pipe and tube ends. Remove burrs. Bevel plain end ferrous pipe.

B. Remove scale and dirt, on inside and outside, before assembly.

C. Prepare piping connections to equipment with flanges or unions.

3.03 INSTALLATION

A. Install in accordance with manufacturer's instructions.

B. Provide non-conducting dielectric connections wherever jointing dissimilar metals.

C. Route piping in orderly manner and maintain gradient. Route parallel and perpendicular to walls.

D. Install piping to maintain headroom, conserve space, and not interfere with use of space.

E. Group piping whenever practical at common elevations.

F. Provide clearance in hangers and from structure and other equipment for installation of insulation and access to valves and fittings.

G. Provide access where valves and fittings are not exposed.

H. Where pipe support members are welded to structural building framing, scrape, brush clean, and apply one coat of zinc rich primer to welding.

I. Provide support for utility meters in accordance with requirements of utility companies.

J. Prepare exposed, unfinished pipe, fittings, supports, and accessories ready for finish painting.

K. Install valves with stems upright or horizontal, not inverted.

L. Pipe vents from gas pressure reducing valves to outdoors and terminate in weather proof hood.

M. Sleeve pipes passing through partitions, walls and floors.

N. Inserts:
   1. Provide inserts for placement in concrete formwork.
   2. Provide inserts for suspending hangers from reinforced concrete slabs and sides of reinforced concrete beams.
   3. Provide hooked rod to concrete reinforcement section for inserts carrying pipe over 4 inches.
   4. Where concrete slabs form finished ceiling, locate inserts flush with slab surface.
   5. Where inserts are omitted, drill through concrete slab from below and provide through-bolt with recessed square steel plate and nut above slab.

O. Pipe Hangers and Supports:
   1. Install in accordance with ASME B31.9.
   2. Support horizontal piping as scheduled.
   3. Install hangers to provide minimum 1/2 inch space between finished covering and adjacent work.
   4. Place hangers within 12 inches of each horizontal elbow.
   5. Use hangers with 1-1/2 inch minimum vertical adjustment. Design hangers for pipe movement without disengagement of supported pipe.
   6. Support vertical piping at every other floor. Support riser piping independently of connected horizontal piping.
   7. Where several pipes can be installed in parallel and at same elevation, provide multiple or trapeze hangers.
   8. Prime coat exposed steel hangers and supports. Hangers and supports located in crawl spaces, pipe shafts, and suspended ceiling spaces are not considered exposed.

3.04 APPLICATION

A. Install unions downstream of valves and at equipment or apparatus connections.

B. Install brass male adapters each side of valves in copper piped system. Solder adapters to pipe.

C. Install ball valves for shut-off and to isolate equipment, part of systems, or vertical risers.

D. Install ball valves for throttling, bypass, or manual flow control services.

E. Provide plug valves in natural gas systems for shut-off service.

3.05 SERVICE CONNECTIONS

A. Provide new gas service complete with gas meter and regulators in accordance with Section 33 5216. Gas service distribution piping to have initial minimum pressure of 2 psi. Provide regulators on each line serving gravity type appliances, sized in accordance with equipment.

3.06 SCHEDULES

A. Pipe Hanger Spacing:
   1. Metal Piping:
      a. Pipe Size: 1/2 inches to 1-1/4 inches:
         1) Maximum Hanger Spacing: 6.5 ft.
         2) Hanger Rod Diameter: 3/8 inches.
      b. Pipe Size: 1-1/2 inches to 2 inches:
         1) Maximum Hanger Spacing: 10 ft.
         2) Hanger Rod Diameter: 3/8 inch.

END OF SECTION

SECTION 22 1500
GENERAL-SERVICE COMPRESSED-AIR SYSTEMS

PART 1 GENERAL

1.01 SECTION INCLUDES

A. Pipe and pipe fittings.

B. Air outlets.

C. Unions and couplings.

1.02 RELATED REQUIREMENTS

A. Section 03 3000 - Cast-in-Place Concrete.

B. Section 22 0513 - Common Motor Requirements for Plumbing Equipment.

C. Section 22 0523 - General-Duty Valves for Plumbing Piping.

D. Section 22 0548 - Vibration and Seismic Controls for Plumbing Piping and Equipment.

E. Section 22 0553 - Identification for Plumbing Piping and Equipment: Identification of piping system.

F. Section 26 0583 - Wiring Connections: Electrical characteristics and wiring connections.

1.03 REFERENCE STANDARDS

A. ASME B16.3 - Malleable Iron Threaded Fittings: Classes 150 and 300 2021.

B. ASME B16.18 - Cast Copper Alloy Solder Joint Pressure Fittings 2021.

C. ASME B16.22 - Wrought Copper and Copper Alloy Solder-Joint Pressure Fittings 2021.

D. ASME B31.1 - Power Piping 2020.

E. ASTM A53/A53M - Standard Specification for Pipe, Steel, Black and Hot-Dipped, Zinc-Coated, Welded and Seamless 2020.

F. ASTM A234/A234M - Standard Specification for Piping Fittings of Wrought Carbon Steel and Alloy Steel for Moderate and High Temperature Service 2019.

G. ASTM B32 - Standard Specification for Solder Metal 2020.

H. ASTM B88 - Standard Specification for Seamless Copper Water Tube 2020.

I. ASTM B88M - Standard Specification for Seamless Copper Water Tube (Metric) 2020.

1.04 SUBMITTALS

A. See Section 01 3000 - Administrative Requirements for submittal procedures.

B. Product Data: Provide manufacturers catalog literature with capacity, weight, and electrical characteristics and connection requirements.

C. Warranty: Submit manufacturer warranty and ensure forms have been completed in Owner's name and registered with manufacturer.

1.05 QUALITY ASSURANCE

A. Manufacturer Qualifications: Company specializing in manufacturing the type of products specified in this section, with minimum three years of documented experience.

B. Pressure Vessels: Comply with applicable code for installation of pressure vessels.

C. Products Requiring Electrical Connection: Listed and classified by Underwriters Laboratories Inc. as suitable for the purpose specified and indicated.

1.06 DELIVERY, STORAGE, AND HANDLING

A. Accept air compressors, refrigerated air dryer on site in factory-fabricated containers with shipping skids and plastic pipe end protectors in place. Inspect for damage.

B. Protect piping and equipment from weather and construction traffic.

1.07 WARRANTY

A. See Section 01 7800 - Closeout Submittals, for additional warranty requirements.

B. Provide five year manufacturer warranty for reciprocating air compressors.

PART 2 PRODUCTS

2.01 PIPE AND PIPE FITTINGS

A. Steel Pipe: ASTM A53/A53M, Schedule 40 black.
   1. Fittings: ASME B16.3, malleable iron, or ASTM A234/A234M, wrought steel welding type.
   2. Joints: Threaded or welded to ASME B31.1.

B. Copper Tube: ASTM B88 (ASTM B88M), Type L (B), drawn.
   1. Fittings: ASME B16.18, cast copper alloy or ASME B16.22, wrought copper and bronze.
   2. Joints: ASTM B32, solder, Grade Sn95.

2.02 AIR OUTLETS

A. Quick Connector: 3/8 inch brass, snap-on connector with self closing valve, Style A.

2.03 UNIONS AND COUPLINGS

A. Unions:
   1. Ferrous Pipe: 150 psi malleable iron threaded unions.
   2. Copper Tube and Pipe: 150 psi bronze unions with soldered joints.

B. Dielectric Connections: Union with galvanized or plated steel threaded end, copper solder end, water impervious isolation barrier.

C. Flexible Connector: Neoprene with brass threaded connectors.

PART 3 EXECUTION

3.01 INSTALLATION

A. Install equipment in accordance with manufacturer's instructions.

B. Install compressor unit on concrete housekeeping pad. See Section 03 3000.

C. Make air cock and drain connection on horizontal casing.

D. Install line size gate valve and check valve on compressor discharge. See Section 22 0523.

E. Install replaceable cartridge type filter silencer of adequate capacity for each compressor.

F. Place shut off valve on water inlet to aftercooler. Pipe drain to floor drain. See Section 22 0523.

G. Connect condensate drains to nearest floor drain.

H. Install valved bypass around air dryer. Factory insulate inlet and outlet connections. See Section 22 0523.

I. Install valved drip connections at low points of piping system. See Section 22 0523.

J. Install takeoffs to outlets from top of main, with shut off valve after takeoff. Slope takeoff piping to outlets.

K. Install compressed air couplings, female quick connectors, and pressure gauges where outlets are indicated.

L. Install tees instead of elbows at changes in direction of piping. Fit open end of each tee with plug.

M. Identify piping system and components. See Section 22 0553.

3.02 FIELD QUALITY CONTROL

A. See Section 01 4000 - Quality Requirements, for additional requirements.

B. Compressed Air Piping Leak Test: Prior to initial operation, clean and test compressed air piping in accordance with ASME B31.1.

C. Repair or replace compressed air piping as required to eliminate leaks, and retest to demonstrate compliance.

D. Cap and seal ends of piping when not connected to mechanical equipment.

END OF SECTION

SECTION 22 3000
PLUMBING EQUIPMENT

PART 1 GENERAL

1.01 SECTION INCLUDES

A. Commercial gas-fired water heaters.

B. Diaphragm-type expansion tanks.

C. In-line circulator pumps.

1.02 REFERENCE STANDARDS

A. ASHRAE Std 90.1 I-P - Energy Standard for Buildings Except Low-Rise Residential Buildings Most Recent Edition Adopted by Authority Having Jurisdiction, Including All Applicable Amendments and Supplements.

B. ASME BPVC-VIII-1 - Boiler and Pressure Vessel Code, Section VIII, Division 1: Rules for Construction of Pressure Vessels 2021.

1.03 SUBMITTALS

A. See Section 01 3000 - Administrative Requirements for submittals procedures.

B. Product Data:
   1. Provide dimension drawings of water heaters indicating components and connections to other equipment and piping.
   2. Indicate pump type, capacity, power requirements.
   3. Provide certified pump curves showing pump performance characteristics with pump and system operating point plotted. Include NPSH curve when applicable.
   4. Provide electrical characteristics and connection requirements.

C. Warranty Documentation: Submit manufacturer warranty and ensure that forms have been completed in Owner's name and registered with manufacturer.

1.04 QUALITY ASSURANCE

A. Certifications:
   1. Water Tanks: ASME labeled to ASME BPVC-VIII-1.

1.05 WARRANTY

A. See Section 01 7800 - Closeout Submittals for additional warranty requirements.

B. Provide five year manufacturer warranty for domestic water heaters.

PART 2 PRODUCTS

2.01 WATER HEATERS

A. Manufacturers:
   1. A.O. Smith Water Products Co: www.hotwater.com.
   2. Bock Water Heaters, Inc: www.bockwaterheaters.com.
   3. Rheem Manufacturing Company: www.rheem.com.

B. Commercial Gas-Fired Water Heaters:
   1. Type: Automatic, natural gas-fired, vertical storage.
   2. Minimum Efficiency Required: ASHRAE Std 90.1 I-P.
   3. Tank: Glass lined welded steel ASME labeled; multiple flue passages, 4 inch diameter inspection port, thermally insulated with minimum 2 inches glass fiber, encased in corrosion-resistant steel jacket; baked-on enamel finish; floor shield and legs.
   4. Accessories:
      a. Water Connections: Brass.

b. Dip Tube: Brass.
c. Drain valve.
d. Anode: Magnesium.

5. Applications:
6. Controls: Automatic water thermostat with temperature range adjustable from 120 to 180 degrees F, automatic reset high temperature limiting thermostat factory set at 195 degrees F, gas pressure regulator, multi-ribbon or tubular burner, 100 percent safety shut-off pilot and thermocouple, flue baffle and draft hood.

2.02 DIAPHRAGM-TYPE EXPANSION TANKS

A. Manufacturers:
1. Amtrol Inc: www.amtrol.com.
2. Bell & Gossett, a xylem brand: www.bellgossett.com.
3. Taco, Inc: www.taco-hvac.com.
4. Watts: www.watts.com.

B. Construction: Welded steel, tested and stamped in accordance with ASME BPVC-VIII-1; supplied with National Board Form U-1, rated for working pressure of 125 psig, with flexible EPDM diaphragm sealed into tank, and steel legs or saddles.

C. Accessories: Pressure gauge and air-charging fitting, tank drain; precharge to 12 psig.

2.03 IN-LINE CIRCULATOR PUMPS

A. Manufacturers:
1. Armstrong Fluid Technology: www.armstrongfluidtechnology.com.
2. Bell & Gossett, a xylem brand: www.bellgossett.com.
3. Sterling SIHI GmbH: www.sterlingsihi.com.
4. Grundfos.

B. Casing: Bronze, rated for 125 psig working pressure, with stainless steel rotor assembly.

C. Impeller: Bronze.

D. Shaft: Alloy steel with integral thrust collar and two oil lubricated bronze sleeve bearings.

E. Seal: Carbon rotating against a stationary ceramic seat.

F. Drive: Flexible coupling.

2.04 ELECTRICAL WORK

A. Provide electrical motor driven equipment specified complete with motors, motor starters, controls, and wiring.

B. Electrical characteristics to be as specified or indicated.

C. Furnish motor starters complete with thermal overload protection and other appurtenances necessary for the motor control specified.

D. Supply manual or automatic control and protective or signal devices required for the operation specified, and any control wiring required for controls and devices not shown.

PART 3 EXECUTION

3.01 INSTALLATION

A. Install plumbing equipment in accordance with manufacturer's instructions, as required by code, and complying with conditions of certification, if any.

B. Coordinate with plumbing piping and related fuel piping work to achieve operating system.

C. Pumps:

1. Ensure pumps operate at specified system fluid temperatures without vapor binding and cavitation, are non-overloading in parallel or individual operation, and operate within 25 percent of midpoint of published maximum efficiency curve.

D. For any equipment supplied with NFC (Near Field communication) enabled chip the chip must be intact and operable when turned over to the owner. If damaged during construction chip shall be replaced with new.

END OF SECTION

SECTION 22 4000
PLUMBING FIXTURES

PART 1 GENERAL

1.01 SECTION INCLUDES

A. Flush valve water closets.

B. Wall hung urinals.

C. Wall-hung, solid surface, multistation lavatory units.

D. Sinks.

E. Shower receptors.

F. Showers.

G. Mop sinks.

H. Emergency eye and face wash.

I. Emergency showers.

1.02 RELATED REQUIREMENTS

1.03 REFERENCE STANDARDS

A. ADA Standards - 2010 ADA Standards for Accessible Design 2010.

B. ASME A112.6.1M - Floor-Affixed Supports for Off-the-Floor Plumbing Fixtures for Public Use 1997 (Reaffirmed 2017).

C. ASME A112.18.1 - Plumbing Supply Fittings 2018, with Errata.

D. ASME A112.19.2 - Ceramic Plumbing Fixtures 2018, with Errata.

E. ASME A112.19.3 - Stainless Steel Plumbing Fixtures 2017, with Errata.

F. ASME A112.19.4M - Porcelain Enameled Formed Steel Plumbing Fixtures 1994 (Reaffirmed 2009).

G. ASSE 1014 - Performance Requirements for Backflow Prevention Devices for Hand-Held Showers 2020.

H. ASSE 1070 - Performance Requirements for Water Temperature Limiting Devices 2020.

I. ASTM E84 - Standard Test Method for Surface Burning Characteristics of Building Materials 2022.

J. IAPMO Z124 - Plastic Plumbing Fixtures 2017 (Reaffirmed 2021).

K. ISFA 2-01 - Classification and Standards for Solid Surfacing Material 2013.

L. NEMA LD 3 - High-Pressure Decorative Laminates 2005.

M. NSF 61 - Drinking Water System Components - Health Effects 2021.

N. NSF 372 - Drinking Water System Components - Lead Content 2022.

1.04 SUBMITTALS

A. See Section 01 3000 - Administrative Requirements for submittal procedures.

B. Product Data: Provide catalog illustrations of fixtures, sizes, rough-in dimensions, utility sizes, trim, and finishes.

C. Warranty: Submit manufacturer warranty and ensure forms have been completed in Owner's name and registered with manufacturer.

1.05 DELIVERY, STORAGE, AND HANDLING

A. Accept fixtures on site in factory packaging. Inspect for damage.

B. Protect installed fixtures from damage by securing areas and by leaving factory packaging in place to protect fixtures and prevent use.

1.06 WARRANTY

A. See Section 01 7800 - Closeout Submittals for additional warranty requirements.

B. Provide five year manufacturer warranty for electric water cooler.

PART 2 PRODUCTS

2.01 GENERAL REQUIREMENTS

A. Potable Water Systems: Provide plumbing fittings and faucets that comply with NSF 61 and NSF 372 for maximum lead content; label pipe and fittings.

2.02 FLUSH VALVE WATER CLOSETS

A. Water Closets:
   1. Vitreous china, ASME A112.19.2, floor mounted, siphon jet flush action, china bolt caps.
   2. Flush Valve: Exposed (top spud).
   3. Flush Operation: Sensor operated.
   4. Handle Height: 44 inches or less.
   5. Inlet Size: 1-1/2 inches.
   6. Trapway Outlet: 4 inch.
   7. Color: White.
   8. Manufacturers:
      a. American Standard, Inc: www.americanstandard-us.com.
      b. Gerber Plumbing Fixtures LLC: www.gerberonline.com.
      c. Kohler Company: www.kohler.com.
      d. Sloan.
      e. Zurn Industries, Inc: www.zurn.com.

B. Flush Valves:
   1. Manufacturers:
      a. American Standard, Inc: www.americanstandard-us.com.
      b. Delany Products: www.delanyvalve.com.
      c. Sloan Valve Company: www.sloanvalve.com.
      d. Zurn Industries, Inc: www.zurn.com.

C. Toilet Seats:
   1. Manufacturers:
      a. American Standard, Inc: www.americanstandard-us.com.
      b. Bemis Manufacturing Company: www.bemismfg.com.
      c. Church Seat Company: www.churchseats.com.
      d. Centoco.
      e. Olsonite: www.olsonite.com.
      f. Zurn Industries, Inc: www.zurn.com.
      g. Comfort Seats.
   2. Solid white plastic, open front, extended back, self-sustaining hinge, brass bolts, with cover.

D. Water Closet Carriers:
   1. Manufacturers:
      a. JOSAM Company: www.josam.com.
      b. Zurn Industries, Inc: www.zurn.com.
   2. ASME A112.6.1M; adjustable cast iron frame, integral drain hub and vent, adjustable spud, lugs for floor and wall attachment, threaded fixture studs with nuts and washers.

2.03 WALL HUNG URINALS

A. Manufacturers:

1. American Standard, Inc: www.americanstandard-us.com.
2. Gerber Plumbing Fixtures LLC: www.gerberonline.com.
3. Kohler Company: www.kohler.com.
4. Sloan.
5. Zurn Industries, LLC: www.zurn.com/#sle.

B. Vitreous china, ASME A112.19.2, wall hung with side shields and concealed carrier.
1. Consumption Volume: 1.0 gal per flush, maximum.
2. Flush Valve: Exposed (top spud).
3. Flush Operation: Sensor operated.
4. Trapway Outlet: Integral.
5. Supply Size: 3/4 inch.
6. Outlet Size and Location: 2 inches, bottom side.

C. Flush Valves:
1. Manufacturers:
a. American Standard, Inc: www.americanstandard-us.com.
b. Delany Products: www.delaneyvalve.com.
c. Sloan Valve Company: www.sloanvalve.com.
d. Zurn Industries, Inc: www.zurn.com.

D. Urinal Carriers:
1. Manufacturers:
a. JOSAM Company: www.josam.com.
b. Zurn Industries, Inc: www.zurn.com.
2. ASME A112.6.1M; cast iron and steel frame with tubular legs, lugs for floor and wall attachment, threaded fixture studs for fixture hanger, bearing studs.

2.04 WALL-HUNG, SOLID SURFACE, MULTISTATION LAVATORY UNITS

A. Manufacturers:
1. Sloan.
2. Substitutions: See Section 01 6000 - Product Requirements.

B. Description: Rectilinear, level-surface deck, seamless and integral elongated basin, with stainless steel enclosed pedestal cabinet.

C. Deck and Bowl Material: Fabricate from molded engineered stone material consisting of natural quartz, granite, and other minerals in a matrix of thermoset acrylic modified bio-based polyester resin and meeting requirements of IAPMO Z124.

D. Surface Burning Characteristics: Smoke developed index less than 450, and flame spread index less than 25, Class A, when tested in accordance with ASTM E84.

E. Soap Dispenser:
1. Deck-mounted, sensor-operated, chrome-plated plastic, with LED battery and soap level indicators, battery box and batteries.

F. Color: As selected by Architect from manufacturer's full line.

G. Faucet Drilling: Infrared faucet battery.

H. Sensor-Operated Faucets:
1. High profile metering faucet with infrared and external temperature control.
2. Vandal-resistant meeting requirements of ASME A112.18.1 and ADA Standards compliant.
3. Body: Polished, chrome-plated commercial solid cast brass, with 4 inch (102 mm) centerset mounting with anti-rotation trim plate.
4. Tempered Water Supply: ADA Standards compliant lever on faucet body.
5. Aerator: Flow rate of 0.5 gpm at 20 to 80 psi operating range.

6. Sensor Module: Water conserving, vandal-resistant adjustable sensor unit with timing turn-off delay and stationary object automatic timed cutoff, with battery diagnostic light, serviceable from above deck.
7. Power Supply: 6 VDC lithium battery and single 115 VAC plug-in adapter.
8. Thermostatic Mixing Valve:
   a. ASSE 1070 listed with combination stop, strainer, and check valves, and flexible stainless steel connectors.

I. Access Panel: Stainless steel.

J. Support Frame: Wall mounted, heavy gauge, stainless steel.

2.05 SINKS

A. Manufacturers:
1. Corian.
2. Regency.

B. Kitchen Faucets:
1. Manufacturers:
   a. American Standard, Inc; www.americanstandard-us.com/#sle.
   b. Grohe America, Inc; www.grohe.com/us/#sle.
   c. PROFLO: www.ferguson.com/#sle.
2. Single Handle Faucet with Side Spray:
   a. Spray Type: Full stream spray at 1.5 gpm, maximum.
   b. ASME A112.18.1, ADA Standards, and NSF 61 compliant assembly.
   c. Materials: Ceramic disc-cartridge valve on brass body with polished chrome finish.

C. Accessories: Provide braided water supply lines, slip-joint p-trap, and stainless steel basket strainer.

2.06 SHOWER RECEPTORS

A. Solid Surfacing Shower Receptors: Solid plastic resin casting, self-supporting, for installation over conventional subfloor; complying with IAPMO Z124.
1. Material: Complying with ISFA 2-01 and NEMA LD 3; acrylic or polyester resin, renewable material filler, and pigments; homogenous, nonporous and capable of being worked and repaired using standard woodworking tools; no surface coating; color and pattern consistent throughout thickness.
2. Surface Burning Characteristics: Flame spread index of 25 or less, and smoke developed index of 450 or less, Class A, when tested in accordance with ASTM E84.
3. Finish on Exposed Surfaces: Provide satin or matte, gloss rating of 3 to 20.
4. Color and Pattern: As selected by from manufacturer's full line.
5. Manufacturers:
   a. American Standard, Inc: www.americanstandard-us.com/#sle.
   b. Inpro: www.inprocorp.com/#sle.
   c. Transolid, Inc: www.transolid.com/#sle.

B. Drain Trim: Removable chrome-plated strainer and tail piece.

2.07 SHOWERS

A. Showers:
1. Manufacturers:
   a. American Standard, Inc: www.americanstandard-us.com/#sle.
   b. Aqua Glass Corporation: www.aquaglass.com/#sle.
   c. DXV by American Standard, Inc: www.dxv.com/#sle.
   d. Grohe America, Inc: www.grohe.com/us/#sle.
   e. Jacuzzi: www.jacuzzi.com/#sle.

f. Kohler Company: www.kohler.com/#sle.

2. Cabinet: ASME A112.19.4M; porcelain enamelled steel, 32 by 32 by 75 inches with stone texture receptor, soap dish, removable chrome plated strainer, tail piece, .
3. Cabinet: IAPMO Z124 reinforced glass fiber, 32 by 32 by 75 inches with stone texture, integral receptor, soap dish, integral seat, removable chrome plated strainer, tail piece, .

B. Trim: ASME A112.18.1; concealed rough brass metering valve with closed fluid metering system adjustable from 5 to 120 seconds, chrome-plated push button and escutcheon, wheel handle stop.

2.08 MOP SINKS

A. Manufacturers:
1. Acorn Engineering Company: www.acorneng.com/#sle.
2. Just Manufacturing Company: www.justmfg.com/#sle.
3. Zurn Industries, LLC: www.zurn.com/#sle.
4. Fiat.

B. Dimensions: As indicated on drawings.

C. Trim: ASME A112.18.1 exposed wall type supply with cross handles, spout wall brace, vacuum breaker, hose end spout, strainers, eccentric adjustable inlets, integral screwdriver stops with covering caps and adjustable threaded wall flanges.

D. Accessories:
1. 5 feet of 1/2 inch diameter plain end reinforced plastic hose.
2. Hose clamp hanger.
3. Mop hanger.

2.09 EMERGENCY EYE AND FACE WASH

A. Manufacturers:
1. Haws Corporation: www.hawsco.com.
2. Therm-Omega-Tech, Inc: www.thermomegatech.com.
3. Acorn..
4. Guardian.

B. Emergency Wash: ANSI Z358.1; wall-mounted, self-cleaning, nonclogging eye and face wash with quick opening, full-flow valves, stainless steel eye and face wash receptor, twin eye wash heads and face spray ring, stainless steel dust cover, copper alloy control valve and fittings.

2.10 EMERGENCY SHOWERS

A. Manufacturers:
1. Haws Corporation: www.hawsco.com.
2. Therm-Omega-Tech, Inc: www.thermomegatech.com.
3. Acorn..
4. Guardian.

B. Emergency Shower: ANSI Z358.1; wall-mounted, self- cleaning, nonclogging 8 inch diameter stainless steel deluge shower head with elbow, one inch full flow valve with pull chain and 8 inch diameter ring, one inch interconnecting fittings.

PART 3 EXECUTION

3.01 EXAMINATION

A. Verify that walls and floor finishes are prepared and ready for installation of fixtures.

B. Verify that electric power is available and of the correct characteristics.

C. Confirm that millwork is constructed with adequate provision for the installation of counter top lavatories and sinks.

3.02 PREPARATION

A. Rough-in fixture piping connections in accordance with minimum sizes indicated in fixture rough-in schedule for particular fixtures.

3.03 INSTALLATION

A. Install each fixture with trap, easily removable for servicing and cleaning.

B. Provide chrome-plated rigid or flexible supplies to fixtures with loose key stops, reducers, and escutcheons.

C. Install components level and plumb.

D. Install and secure fixtures in place with wall supports and bolts.

E. Solidly attach water closets to floor with lag screws. Lead flashing is not intended hold fixture in place.

F. For any equipment supplied with NFC (Near Field communication) enabled chip the chip must be intact and operable when turned over to the owner. If damaged during construction chip shall be replaced with new.

3.04 INTERFACE WITH WORK OF OTHER SECTIONS

A. Review millwork shop drawings. Confirm location and size of fixtures and openings before rough-in and installation.

3.05 ADJUSTING

A. Adjust stops or valves for intended water flow rate to fixtures without splashing, noise, or overflow.

3.06 CLEANING

A. Clean plumbing fixtures and equipment.

3.07 PROTECTION

A. Protect installed products from damage due to subsequent construction operations.

B. Do not permit use of fixtures by construction personnel.

C. Repair or replace damaged products before Date of Substantial Completion.

END OF SECTION

SECTION 23 0513
COMMON MOTOR REQUIREMENTS FOR HVAC EQUIPMENT

PART 1 GENERAL

1.01 SECTION INCLUDES

A. General construction and requirements.

B. Applications.

C. Single phase electric motors.

D. Three phase electric motors.

1.02 RELATED REQUIREMENTS

A. Section 26 0583 - Wiring Connections: Electrical characteristics and wiring connections.

B. Section 26 2913 - Enclosed Controllers.

1.03 REFERENCE STANDARDS

A. ABMA STD 9 - Load Ratings and Fatigue Life for Ball Bearings 2015 (Reaffirmed 2020).

B. IEEE 112 - IEEE Standard Test Procedure for Polyphase Induction Motors and Generators 2017.

C. NEMA MG 1 - Motors and Generators 2021.

D. NFPA 70 - National Electrical Code Most Recent Edition Adopted by Authority Having Jurisdiction, Including All Applicable Amendments and Supplements.

1.04 SUBMITTALS

A. See Section 01 3000 - Administrative Requirements for submittal procedures.

B. Product Data: Provide wiring diagrams with electrical characteristics and connection requirements.

1.05 QUALITY ASSURANCE

A. Comply with NFPA 70.

1.06 DELIVERY, STORAGE, AND HANDLING

A. Protect motors stored on site from weather and moisture by maintaining factory covers and suitable weather-proof covering. For extended outdoor storage, remove motors from equipment and store separately.

PART 2 PRODUCTS

2.01 GENERAL CONSTRUCTION AND REQUIREMENTS

A. Construction:
   1. Open drip-proof type except where specifically noted otherwise.
   2. Design for continuous operation in 104 degrees F environment.
   3. Design for temperature rise in accordance with NEMA MG 1 limits for insulation class, service factor, and motor enclosure type.
   4. Motors with frame sizes 254T and larger: Energy efficient type.

B. Explosion-Proof Motors: UL approved and labelled for hazard classification, with over temperature protection.

C. Visible Nameplate: Indicating motor horsepower, voltage, phase, cycles, RPM, full load amps, locked rotor amps, frame size, manufacturer's name and model number, service factor, power factor, efficiency.

D. Wiring Terminations:

1. Provide terminal lugs to match branch circuit conductor quantities, sizes, and materials indicated. Enclose terminal lugs in terminal box sized to NFPA 70, threaded for conduit.
2. For fractional horsepower motors where connection is made directly, provide threaded conduit connection in end frame.

2.02 APPLICATIONS

A. Exception: Motors less than 250 watts, for intermittent service may be the equipment manufacturer's standard and need not comply with these specifications.

B. Single phase motors for shaft mounted fans, oil burners, and centrifugal pumps: Split phase type.

C. Single phase motors for shaft mounted fans or blowers: Permanent split capacitor type.

D. Single phase motors for fans, pumps, blowers, and air compressors: Capacitor start type.

E. Single phase motors for fans, blowers, and pumps: Capacitor start, capacitor run type.

F. Motors located in exterior locations, wet air streams downstream of sprayed coil dehumidifiers, draw through cooling towers, air cooled condensers, humidifiers, direct drive axial fans, roll filters, explosion proof environments, and dust collection systems: Totally enclosed type.

G. Motors located in outdoors, in wet air streams downstream of sprayed coil dehumidifiers, in draw through cooling towers, and in humidifiers: Totally enclosed weatherproof epoxy-treated type.

H. Motors located outdoors and in draw through cooling towers: Totally enclosed weatherproof epoxy-sealed type.

2.03 SINGLE PHASE POWER - SPLIT PHASE MOTORS

A. Starting Torque: Less than 150 percent of full load torque.

B. Starting Current: Up to seven times full load current.

C. Breakdown Torque: Approximately 200 percent of full load torque.

D. Drip-proof Enclosure: Class A (50 degrees C temperature rise) insulation, NEMA Service Factor, prelubricated sleeve or ball bearings.

E. Enclosed Motors: Class A (50 degrees C temperature rise) insulation, 1.15 Service Factor, prelubricated ball bearings.

2.04 SINGLE PHASE POWER - PERMANENT-SPLIT CAPACITOR MOTORS

A. Starting Torque: Exceeding one fourth of full load torque.

B. Starting Current: Up to six times full load current.

C. Multiple Speed: Through tapped windings.

D. Open Drip-proof or Enclosed Air Over Enclosure: Class A (50 degrees C temperature rise) insulation, minimum 1.0 Service Factor, prelubricated sleeve or ball bearings, automatic reset overload protector.

2.05 SINGLE PHASE POWER - CAPACITOR START MOTORS

A. Starting Torque: Three times full load torque.

B. Starting Current: Less than five times full load current.

C. Pull-up Torque: Up to 350 percent of full load torque.

D. Breakdown Torque: Approximately 250 percent of full load torque.

E. Motors: Capacitor in series with starting winding; provide capacitor-start/capacitor-run motors with two capacitors in parallel with run capacitor remaining in circuit at operating speeds.

F. Drip-proof Enclosure: Class A (50 degrees C temperature rise) insulation, NEMA Service Factor, prelubricated sleeve bearings.

G. Enclosed Motors: Class A (50 degrees C temperature rise) insulation, 1.15 Service Factor, prelubricated ball bearings.

2.06 THREE PHASE POWER - SQUIRREL CAGE MOTORS

A. Starting Torque: Between 1 and 1-1/2 times full load torque.

B. Starting Current: Six times full load current.

C. Power Output, Locked Rotor Torque, Breakdown or Pull Out Torque: NEMA Design B characteristics.

D. Design, Construction, Testing, and Performance: Comply with NEMA MG 1 for Design B motors.

E. Insulation System: NEMA Class F.

F. Service Factor: Minimum 1.15.

G. Testing Procedure: In accordance with IEEE 112. Load test motors to determine free from electrical or mechanical defects in compliance with performance data.

H. Motor Frames: NEMA Standard T-Frames of steel, aluminum, or cast iron with end brackets of cast iron or aluminum with steel inserts.

I. Thermistor System (Motor Frame Sizes 254T and Larger): Three PTC thermistors embedded in motor windings and epoxy encapsulated solid state control relay for wiring into motor starter; refer to Section 26 2913.

J. Bearings: Grease lubricated anti-friction ball bearings with housings equipped with plugged provision for relubrication, rated for minimum ABMA STD 9, L-10 life of 20,000 hours. Calculate bearing load with NEMA minimum V-belt pulley with belt center line at end of NEMA standard shaft extension. Stamp bearing sizes on nameplate.

K. Sound Power Levels: To NEMA MG 1.

L. Part Winding Start Where Indicated: Use part of winding to reduce locked rotor starting current to approximately 60 percent of full winding locked rotor current while providing approximately 50 percent of full winding locked rotor torque.

M. Weatherproof Epoxy Sealed Motors: Epoxy seal windings using vacuum and pressure with rotor and starter surfaces protected with epoxy enamel; bearings double shielded with waterproof non-washing grease.

N. Nominal Efficiency: As indicated at full load and rated voltage when tested in accordance with IEEE 112.

O. Nominal Power Factor: As indicated at full load and rated voltage when tested in accordance with IEEE 112.

2.07 THREE PHASE POWER WITH ADDITIONAL REQUIREMENTS

A. Motors used with Variable Frequency Controllers: Ratings, characteristics, and features coordinated with and approved by controller manufactuerer.
   1. Windings: Copper magnet wire with moisture-resistant insulation varnish, desgined and tested to resist transient spikes, high frequencies, and short time rise pulses produced by pulse-width moduated inverters.
   2. Energy and Premium Efficent Motors: Class B temperature rise; Class F insulation.
   3. Inverter-Duty Motors: Class F temperature rise; Class H insulation.
   4. Thermal Protection: Comply with NEMA MG 1 requirements for thermally protected motors.

PART 3 EXECUTION

3.01 INSTALLATION

A. Install in accordance with manufacturer's instructions.

B. Install securely on firm foundation. Mount ball bearing motors with shaft in any position.

C. Check line voltage and phase and ensure agreement with nameplate.

D. For any equipment supplied with NFC (Near Field communication) enabled chip the chip must be intact and operable when turned over to the owner. If damaged during construction chip shall be replaced with new.

END OF SECTION

SECTION 23 0517
SLEEVES AND SLEEVE SEALS FOR HVAC PIPING

PART 1 GENERAL

1.01 SECTION INCLUDES

A. Pipe sleeves.

B. Pipe-sleeve seals.

C. Escutcheons.

1.02 RELATED REQUIREMENTS

A. Section 07 8400 - Firestopping.

B. Section 23 0523 - General-Duty Valves for HVAC Piping.

C. Section 23 0553 - Identification for HVAC Piping and Equipment: Piping identification.

D. Section 23 0719 - HVAC Piping Insulation.

1.03 REFERENCE STANDARDS

A. ASTM C592 - Standard Specification for Mineral Fiber Blanket Insulation and Blanket-Type Pipe Insulation (Metal-Mesh Covered) (Industrial Type) 2022a.

B. ASTM E814 - Standard Test Method for Fire Tests of Penetration Firestop Systems 2013a (Reapproved 2017).

1.04 SUBMITTALS

A. See Section 01 3000 - Administrative Requirements for submittal procedures.

B. Shop Drawings: Indicate pipe materials used, jointing methods, supports, floor and wall penetration seals. Indicate installation, layout, weights, mounting and support details, and piping connections.

1.05 QUALITY ASSURANCE

A. Manufacturer Qualifications: Company specializing in manufacturing the Products specified in this section with minimum three years documented experience.

B. Installer Qualifications: Company specializing in performing work of the type specified this section.
   1. Minimum three years experience.
   2. Approved by manufacturer.

C. Clean equipment, pipes, valves, and fittings of grease, metal cuttings, and sludge that may have accumulated from the installation and testing of the system.

1.06 DELIVERY, STORAGE, AND HANDLING

A. Deliver and store sleeve and sleeve seals in shipping containers, with labeling in place.

B. Provide temporary protective coating on cast iron and steel sleeves if shipped loose.

1.07 WARRANTY

A. See Section 01 7800 - Closeout Submittals, for additional warranty requirements.

B. Correct defective Work within a five year period after Date of Substantial Completion.

PART 2 PRODUCTS

2.01 PIPE SLEEVES

A. Manufacturers:
   1. Flexicraft Industries; Pipe Wall Sleeve: www.flexicraft.com/#sle.

B. Vertical Piping:

1. Sleeve Length: 1 inch above finished floor.
2. Provide sealant for watertight joint.
3. Blocked Out Floor Openings: Provide 1-1/2 inch angle set in silicon adhesive around opening.
4. Drilled Penetrations: Provide 1-1/2 inch angle ring or square set in silicone adhesive around penetration.

C. Plastic or Sheet Metal: Pipe passing through interior walls, partitions, and floors, unless steel or brass sleeves are specified below.

D. Pipe Passing Through Below Grade Exterior Walls:
1. Zinc coated or cast iron pipe.
2. Provide watertight space with link rubber or modular seal between sleeve and pipe on both pipe ends.

E. Clearances:
1. Provide allowance for insulated piping.
2. Wall, Floor, Partitions, and Beam Flanges: 1 inch greater than external pipe diameter.
3. All Rated Openings: Caulked tight with fire stopping material in compliance with ASTM E814 in accordance with Section 07 8400 to prevent the spread of fire, smoke, and gases.

2.02 PIPE-SLEEVE SEALS

A. Manufacturers:
1. Flexicraft Industries; PipeSeal: www.flexicraft.com/#sle.

B. Modular Mechanical Sleeve-Seal:
1. Elastomer-based interlocking links continuously fill annular space between pipe and wall-sleeve, wall or casing opening.
2. Watertight seal between pipe and wall-sleeve, wall or casing opening.
3. Size and select seal component materials in accordance with service requirements.
4. Glass-reinforced plastic pressure end plates.

2.03 ESCUTCHEONS

A. Material:
1. Chrome-plated.
2. Metals and Finish: Comply with ASME A112.18.1.

B. Construction:
1. One-piece for mounting on chrome-plated tubing or pipe and one-piece or split-pattern type elsewhere.
2. Internal tension devices or setscrews to maintain a fixed position against a surface.

PART 3 EXECUTION

3.01 PREPARATION

A. Ream pipe and tube ends. Remove burrs. Bevel plain end ferrous pipe.

B. Remove scale and foreign material, from inside and outside, before assembly.

3.02 INSTALLATION

A. Route piping in orderly manner, plumb and parallel to building structure. Maintain gradient.

B. Install piping to conserve building space, to not interfere with use of space and other work.

C. Install piping and pipe sleeves to allow for expansion and contraction without stressing pipe, joints, or connected equipment.

D. Inserts:
1. Provide inserts for placement in concrete formwork.

2. Provide inserts for suspending hangers from reinforced concrete slabs and sides of reinforced concrete beams.
3. Provide hooked rod to concrete reinforcement section for inserts carrying pipe over 4 inches.
4. Where concrete slabs form finished ceiling, locate inserts flush with slab surface.
5. Where inserts are omitted, drill through concrete slab from below and provide through-bolt with recessed square steel plate and nut above slab.

E. Structural Considerations:
1. Do not penetrate building structural members unless indicated.

F. Provide sleeves when penetrating footings, floors, walls, and partitions. Seal pipe including sleeve penetrations to achieve fire resistance equivalent to fire separation required.
1. Underground Piping: Caulk pipe sleeve watertight with lead and oakum or mechanically expandable chloroprene inserts with bitumen sealed metal components.
2. Aboveground Piping:
a. Pack solid using mineral fiber in compliance with ASTM C592.
b. Fill space with an elastomer caulk to a depth of 0.50 inch where penetrations occur between conditioned and unconditioned spaces.
3. All Rated Openings: Caulk tight with fire stopping material in compliance with ASTM E814 in accordance with Section 07 8400 to prevent the spread of fire, smoke, and gases.
4. Caulk exterior wall sleeves watertight with lead and oakum or mechanically expandable chloroprene inserts with mastic-sealed components.

G. Manufactured Sleeve-Seal Systems:
1. Install manufactured sleeve-seal systems in sleeves located in grade slabs and exterior concrete walls at piping entrances into building.
2. Provide sealing elements of the size, quantity, and type required for the piping and sleeve inner diameter or penetration diameter.
3. Locate piping in center of sleeve or penetration.
4. Install field assembled sleeve-seal system components in annular space between sleeve and piping.
5. Tighten bolting for a water-tight seal.
6. Install in accordance with manufacturer's recommendations.

H. Escutcheons:
1. Install and firmly attach escutcheons at piping penetrations into finished spaces.
2. Provide escutcheons on both sides of partitions separating finished areas through which piping passes.
3. Use chrome plated escutcheons in occupied spaces and to conceal openings in construction.

I. When installing more than one piping system material, ensure system components are compatible and joined to ensure the integrity of the system. Provide necessary joining fittings. Ensure flanges, union, and couplings for servicing are consistently provided.

3.03 CLEANING

A. Upon completion of work, clean all parts of the installation.

B. Clean equipment, pipes, valves, and fittings of grease, metal cuttings, and sludge that may have accumulated from the installation and testing of the system.

END OF SECTION

SECTION 23 0529
HANGERS AND SUPPORTS FOR HVAC PIPING AND EQUIPMENT

PART 1 GENERAL

1.01 SECTION INCLUDES

A. Support and attachment components.

1.02 RELATED REQUIREMENTS

A. Section 03 3000 - Cast-in-Place Concrete: Concrete equipment pads.

B. Section 05 5000 - Metal Fabrications: Materials and requirements for fabricated metal supports.

C. Section 23 0548 - Vibration and Seismic Controls for HVAC.

1.03 REFERENCE STANDARDS

A. ASTM A123/A123M - Standard Specification for Zinc (Hot-Dip Galvanized) Coatings on Iron and Steel Products 2017.

B. ASTM A153/A153M - Standard Specification for Zinc Coating (Hot-Dip) on Iron and Steel Hardware 2016a.

C. ASTM A181/A181M - Standard Specification for Carbon Steel Forgings, for General-Purpose Piping 2022.

D. ASTM A36/A36M - Standard Specification for Carbon Structural Steel 2019.

E. ASTM A47/A47M - Standard Specification for Ferritic Malleable Iron Castings 1999, with Editorial Revision (2018).

F. ASTM A283/A283M - Standard Specification for Low and Intermediate Tensile Strength Carbon Steel Plates 2018.

G. ASTM A395/A395M - Standard Specification for Ferritic Ductile Iron Pressure-Retaining Castings for Use at Elevated Temperatures 1999 (Reapproved 2018).

H. ASTM B633 - Standard Specification for Electrodeposited Coatings of Zinc on Iron and Steel 2019.

I. ASTM E84 - Standard Test Method for Surface Burning Characteristics of Building Materials 2022.

J. FM (AG) - FM Approval Guide current edition.

K. ASTM E96/E96M - Standard Test Methods for Gravimetric Determination of Water Vapor Transmission Rate of Materials 2022.

L. MFMA-4 - Metal Framing Standards Publication 2004.

M. MSS SP-58 - Pipe Hangers and Supports - Materials, Design, Manufacture, Selection, Application, and Installation 2018, with Amendment (2019).

N. UL (DIR) - Online Certifications Directory Current Edition.

O. UL 723 - Standard for Test for Surface Burning Characteristics of Building Materials Current Edition, Including All Revisions.

1.04 ADMINISTRATIVE REQUIREMENTS

A. Coordination:
   1. Coordinate sizes and arrangement of supports and bases with the actual equipment and components to be installed.
   2. Coordinate the work with other trades to provide additional framing and materials required for installation.
   3. Coordinate compatibility of support and attachment components with mounting surfaces at the installed locations.

4. Coordinate the arrangement of supports with ductwork, piping, equipment and other potential conflicts installed under other sections or by others.
5. Notify Architect of any conflicts with or deviations from Contract Documents. Obtain direction before proceeding with work.

B. Sequencing:
1. Do not install products on or provide attachment to concrete surfaces until concrete has fully cured in accordance with Section 03 3000.

1.05 SUBMITTALS

A. See Section 01 3000 - Administrative Requirements for submittal procedures.

B. Product Data: Provide manufacturer's standard catalog pages and data sheets for channel (strut) framing systems, nonpenetrating rooftop supports, post-installed concrete and masonry anchors, and thermal insulated pipe supports.

C. Shop Drawings: Include details for fabricated hangers and supports where materials or methods other than those indicated are proposed for substitution.

1.06 QUALITY ASSURANCE

A. Comply with applicable building code.

B. Installer Qualifications for Powder-Actuated Fasteners (when specified): Certified by fastener system manufacturer with current operator's license.

C. Installer Qualifications for Field-Welding: As specified in Section 05 5000.

D. Product Listing Organization Qualifications: An organization recognized by OSHA as a Nationally Recognized Testing Laboratory (NRTL) and acceptable to authorities having jurisdiction.

1.07 DELIVERY, STORAGE, AND HANDLING

A. Receive, inspect, handle, and store products in accordance with manufacturer's instructions.

PART 2 PRODUCTS

2.01 SUPPORT AND ATTACHMENT COMPONENTS

A. General Requirements:
1. Provide all required hangers, supports, anchors, fasteners, fittings, accessories, and hardware as necessary for the complete installation of plumbing work.
2. Provide products listed, classified, and labeled as suitable for the purpose intended, where applicable.
3. Where support and attachment component types and sizes are not indicated, select in accordance with manufacturer's application criteria as required for the load to be supported. Include consideration for vibration, equipment operation, and shock loads where applicable.
4. Steel Components: Use corrosion resistant materials suitable for the environment where installed.
   a. Zinc-Plated Steel: Electroplated in accordance with ASTM B633.
   b. Galvanized Steel: Hot-dip galvanized after fabrication in accordance with ASTM A123/A123M or ASTM A153/A153M.

B. Metal Channel (Strut) Framing Systems: Factory-fabricated continuous-slot metal channel (strut) and associated fittings, accessories, and hardware required for field-assembly of supports.
1. Manufacturers:
   a. Cooper B-Line, a division of Eaton Corporation: www.cooperindustries.com/#sle.
   b. Thomas & Betts Corporation: www.tnb.com/#sle.
   c. Unistrut, a brand of Atkore International Inc: www.unistrut.com/#sle.

d. Source Limitations: Furnish hardware, fittings, and accessories from single manufacturer.

2. Provide factory-fabricated continuous-slot metal channel (strut) and associated fittings, accessories, and hardware required for field-assembly of supports.
3. Comply with MFMA-4.
4. Threaded zinc-plated steel unless otherwise indicated.

C. Hanger Rods:
1. Minimum Size, Unless Otherwise Indicated or Required:
a. Equipment Supports: 1/2 inch diameter.
b. Piping up to 1 inch: 1/4 inch diameter.
c. Trapeze Support for Multiple Pipes: 3/8 inch diameter.

D. Steel Cable:
1. Manufacturers:
a. Ductmate Industries, Inc, a DMI Company; Clutcher Cable Hanging System: www.ductmate.com/#sle.

E. Thermal Insulated Pipe Supports:
1. Manufacturers:
a. Buckaroos, Inc: www.buckaroos.com/#sle.
b. KB Enterprises: www.snappitz.com/#sle.
2. General Requirements:
a. Insulated pipe supports to be provided at hanger, support, and guide locations on pipe requiring insulation or additional support.
b. Surface Burning Characteristics: Flame spread index/smoke developed index of 5/30, maximum, when tested in accordance with ASTM E84 or UL 723.
c. Pipe supports to be provided for nominally sized, 1/2 to 30 inch iron pipes.
d. Insulation inserts to consist of rigid polyisocyanurate (urethane) insulation surrounded by a 360 degree, PVC jacketing.
3. PVC Jacket:
a. Pipe insulation protection shields to be provided with a ball bearing hinge and locking seam.
b. Moisture Vapor Transmission: 0.0071 perm inch, when tested in accordance with ASTM E96/E96M.
c. Thickness: 60 mil.
4. Pipe insulation protection shields to be provided at the hanger points and guide locations on pipes requiring insulation.

F. Pipe Stanchions:
1. Manufacturers:
a. Anvil International; H-Block: www.anvilintl.com/#sle.
2. Material: Malleable iron, ASTM A47/A47M; or carbon steel, ASTM A36/A36M.
3. Provide coated or plated saddles to isolate steel hangers from dissimilar metal tube or pipe.
4. For pipe runs, use stanchions of same type and material where vertical adjustment is required for stationary pipe.

G. Beam Clamps:
1. Manufacturers:
a. Ferguson Enterprises Inc: www.fnw.com/#sle.
2. Beam C-Clamp: MSS SP-58 type 23, malleable iron and steel with plain, stainless steel, and zinc finish.
3. Wide Mouth Beam Clamp: MSS SP-58 type 19, malleable iron with plain finish.
4. FM (AG) and UL (DIR) Approved Beam Clamp: MSS SP-58 type 19, plain finish,

5. MSS SP-58 types 19 through 23, 25 or 27 through 30 based on required load.
6. Small or Junior Beam Clamp: MSS SP-58 type 19, malleable iron with plain finish. For inverted usage provide manufacturer listed size(s).
7. Centerload Beam Clamp with Extension Piece: MSS SP-58 type 30, malleable iron with plain finish.
8. Material: ASTM A395/A395M ductile iron, ASTM A36/A36M carbon steel, ASTM A47/A47M malleable iron, ASTM A181/A181M forged steel, or ASTM A283/A283M steel.
9. Provide clamps with hardened steel cup-point set screws and lock-nuts for anchoring in place.

H. Riser Clamps:
1. Manufacturers:
a. Ferguson Enterprises Inc: www.fnw.com/#sle.
b. Source Limitations: Furnish hardware, fittings, and accessories from single manufacturer.
2. Medium Split Horizontal Pipe Clamp: MSS SP-58 type 4, carbon steel or stainless steel with epoxy plated, plain, stainless steel, or zinc plated finish.
3. UL (DIR) listed: Pipe sizes 1/2 to 8 inch.
4. For insulated pipe runs, provide two bolt-type clamps designed for installation under insulation.
5. MSS SP-58 type 1 or 8, carbon steel or steel with epoxy plated, plain, stainless steel, or zinc plated finish.
6. Copper Tube Pipe Clamp: MSS SP-58 type 8, epoxy plated copper.

I. Offset Pipe Clamps: Double-leg design two-piece pipe clamp.

J. Strut Clamps:
1. Pipe Clamp: Two-piece rigid, universal, or outer diameter type, carbon steel with epoxy copper or zinc finish.

K. Insulation Clamps:
1. Material: Carbon steel with epoxy copper or zinc finish.
2. Two bolt-type clamps designed for installation under insulation.

L. Intermediate Pipe Guides:
1. Manufacturers:
a. Anvil International: www.anvilintl.com/#sle.
2. Pipe Diameter 6 inch and Smaller: Provide minimum clearance of 0.16 inch.
3. Pipe Sizes 8 inch: 0.625 inch U-bolt with double nuts providing minimum clearance of 0.28 inch.
4. Pipe Size 10 inch: 0.75 inch U-bolt.
5. Pipe Sizes 12 to 16 inch: 0.875 inch U-bolt.
6. Use pipe clamps with oversize pipe sleeve that provides clearance around pipe.
7. Pipe Sizes 18 to 30 inch: 1 inch U-bolt.

M. Pipe Alignment Guides: Galvanized steel.
1. Manufacturers:
a. Anvil International: www.anvilintl.com/#sle.
2. Pipe Sizes 8 inch and Smaller: Spider or sleeve type.
3. Pipe Sizes 10 inch and Larger: Roller type.
4. Pipe Sizes 18 to 30 inch: 1 inch U-bolt.

N. Dielectric Barriers: Provide between metallic supports and metallic piping and associated items of dissimilar type; acceptable dielectric barriers include rubber or plastic sheets or coatings attached securely to pipe or item.

O. Nonpenetrating Rooftop Supports for Low-Slope Roofs:
1. Manufacturers:
a. Anvil International; H-Block: www.anvilintl.com/#sle.

b. Cooper B-Line, a division of Eaton Corporation: www.cooperindustries.com/#sle.
c. Erico International Corporation, a brand of Pentair: www.erico.com/#sle.
d. Miro.
e. PHP Systems/Design: www.phpsd.com/#sle.
f. Unistrut, a brand of Atkore International Inc: www.unistrut.com/#sle.

2. Provide steel pedestals with thermoplastic or rubber base that rest on top of roofing membrane, not requiring any attachment to the roof structure and not penetrating the roofing assembly, with support fixtures as specified.
3. Base Sizes: As required to distribute load sufficiently to prevent indentation of roofing assembly.
4. Attachment/Support Fixtures: As recommended by manufacturer, same type as indicated for equivalent indoor hangers and supports.
5. Mounting Height: Provide minimum clearance of 6 inches under supported component to top of roofing.

P. Pipe Shields for Insulated Piping:
1. Manufacturers:
a. Anvil International: www.anvilintl.com/#sle.
2. General Construction and Requirements:
a. Surface Burning Characteristics: Comply with ASTM E84 or UL 723.
b. Shields Material: UV-resistant polypropylene with glass fill.
c. Maximum Insulated Pipe Outer Diameter: 12-5/8 inch.
d. Minimum Service Temperature: Minus 40 degrees F.
e. Maximum Service Temperature: 178 degrees F.
f. Pipe shields to be provided at hanger, support, and guide locations on pipe requiring insulation or additional support.

Q. Anchors and Fasteners:
1. Manufacturers - Mechanical Anchors:
a. Hilti, Inc: www.us.hilti.com/#sle.
b. ITW Red Head, a division of Illinois Tool Works, Inc: www.itwredhead.com/#sle.
c. Powers Fasteners, Inc: www.powers.com/#sle.
d. Simpson Strong-Tie Company Inc: www.strongtie.com/#sle.
2. Manufacturers - Powder-Actuated Fastening Systems:
a. Hilti, Inc: www.us.hilti.com/#sle.
b. ITW Ramset, a division of Illinois Tool Works, Inc: www.ramset.com/#sle.
c. Powers Fasteners, Inc: www.powers.com/#sle.
d. Simpson Strong-Tie Company Inc: www.strongtie.com/#sle.
3. Unless otherwise indicated and where not otherwise restricted, use the anchor and fastener types indicated for the specified applications.
4. Concrete: Use preset concrete inserts, expansion anchors, or screw anchors.
5. Solid or Grout-Filled Masonry: Use expansion anchors or screw anchors.
6. Hollow Masonry: Use toggle bolts.
7. Hollow Stud Walls: Use toggle bolts.
8. Sheet Metal: Use sheet metal screws.
9. Wood: Use wood screws.
10. Plastic and lead anchors are not permitted.
11. Preset Concrete Inserts: Continuous metal channel (strut) and spot inserts specifically designed to be cast in concrete ceilings, walls, and floors.
a. Comply with MFMA-4.
b. Channel Material: Use galvanized steel.

c. Manufacturer: Same as manufacturer of metal channel (strut) framing system.

PART 3 EXECUTION

3.01 EXAMINATION

A. Verify that field measurements are as indicated.

B. Verify that mounting surfaces are ready to receive support and attachment components.

C. Verify that conditions are satisfactory for installation prior to starting work.

3.02 INSTALLATION

A. Install products in accordance with manufacturer's instructions.

B. Provide independent support from building structure. Do not provide support from piping, ductwork, conduit, or other systems.

C. Unless specifically indicated or approved by Architect, do not provide support from suspended ceiling support system or ceiling grid.

D. Unless specifically indicated or approved by Architect, do not provide support from roof deck.

E. Do not penetrate or otherwise notch or cut structural members without approval of Structural Engineer.

F. Field-Welding (where approved by Architect): Comply with Section 05 5000.

G. Provide thermal insulated pipe supports complete with hangers and accessories. Install thermal insulated pipe supports during the installation of the piping system.

H. Equipment Support and Attachment:
   1. Use metal fabricated supports or supports assembled from metal channel (strut) to support equipment as required.
   2. Use metal channel (strut) secured to studs to support equipment surface-mounted on hollow stud walls when wall strength is not sufficient to resist pull-out.
   3. Use metal channel (strut) to support surface-mounted equipment in wet or damp locations to provide space between equipment and mounting surface.
   4. Unless otherwise indicated, mount floor-mounted equipment on properly sized 3 inch high concrete pad constructed in accordance with Section 03 3000.
   5. Securely fasten floor-mounted equipment. Do not install equipment such that it relies on its own weight for support.

I. Preset Concrete Inserts: Use manufacturer-provided closure strips to inhibit concrete seepage during concrete pour.

J. Secure fasteners according to manufacturer's recommended torque settings.

K. Remove temporary supports.

3.03 FIELD QUALITY CONTROL

A. See Section 01 4000 - Quality Requirements for additional requirements.

B. Inspect support and attachment components for damage and defects.

C. Repair cuts and abrasions in galvanized finishes using zinc-rich paint recommended by manufacturer. Replace components that exhibit signs of corrosion.

D. Correct deficiencies and replace damaged or defective support and attachment components.

END OF SECTION

SECTION 23 0553
IDENTIFICATION FOR HVAC PIPING AND EQUIPMENT

PART 1 GENERAL

1.01 SECTION INCLUDES

A. Nameplates.

B. Tags.

C. Adhesive-backed duct markers.

D. Stencils.

E. Pipe markers.

F. Ceiling tacks.

1.02 RELATED REQUIREMENTS

A. Section 09 9123 - Interior Painting: Identification painting.

1.03 REFERENCE STANDARDS

A. ASME A13.1 - Scheme for the Identification of Piping Systems 2020.

B. ASTM D709 - Standard Specification for Laminated Thermosetting Materials 2017.

1.04 SUBMITTALS

A. See Section 01 3000 - Administrative Requirements for submittal procedures.

B. List: Submit list of wording, symbols, letter size, and color coding for mechanical identification.

C. Chart, Schedule, and Record Drawings: Submit valve chart and schedule, including valve tag number, location, function, and valve manufacturer's name and model number. Submit record drawings showing valve location and valve tag number along with chart and schedule attached to drawing(s).

D. Product Data: Provide manufacturers catalog literature for each product required.

PART 2 PRODUCTS

2.01 IDENTIFICATION APPLICATIONS

A. Air Handling Units: Nameplates.

B. Air Terminal Units: Tags.

C. Automatic Controls: Tags. Key to control schematic.

D. Control Panels: Nameplates.

E. Dampers: Ceiling tacks, where located above lay-in ceiling.

F. Ductwork: Labels or Stencils.

G. Heat Transfer Equipment: Nameplates.

H. Instrumentation: Tags.

I. Piping: Tags.

J. Relays: Tags.

K. Small-sized Equipment: Tags.

L. Thermostats: Nameplates.

2.02 NAMEPLATES

A. Letter Color: White.

B. Letter Height: 1/4 inch.

C. Background Color: Black.

D. Plastic: Comply with ASTM D709.

2.03 TAGS

A. Metal Tags: Brass with stamped letters; tag size minimum 1-1/2 inch diameter with smooth edges.

B. Valve Tag Chart: Typewritten letter size list in anodized aluminum frame.

2.04 ADHESIVE-BACKED DUCT MARKERS

A. Material: High gloss acrylic adhesive-backed vinyl film 0.0032 inch; printed with UV and chemical resistant inks.

B. Style: Individual Label.

C. Color: Yellow/Black.

2.05 STENCILS

A. Stencils: With clean cut symbols and letters of following size:
   1. 3/4 to 1-1/4 inch Outside Diameter of Insulation or Pipe: 8 inch long color field, 1/2 inch high letters.
   2. 1-1/2 to 2 inch Outside Diameter of Insulation or Pipe: 8 inch long color field, 3/4 inch high letters.
   3. 2-1/2 to 6 inch Outside Diameter of Insulation or Pipe: 12 inch long color field, 1-1/4 inch high letters.
   4. 8 to 10 inch Outside Diameter of Insulation or Pipe: 24 inch long color field, 2-1/2 inch high letters.
   5. Over 10 inch Outside Diameter of Insulation or Pipe: 32 inch long color field, 3-1/2 inch high letters.
   6. Ductwork and Equipment: 2-1/2 inch high letters.

B. Stencil Paint: As specified in Section 09 9123, semi-gloss enamel, colors complying with ASME A13.1.

2.06 PIPE MARKERS

A. Color: Comply with ASME A13.1.

B. Plastic Pipe Markers: Factory fabricated, flexible, semi- rigid plastic, preformed to fit around pipe or pipe covering; minimum information indicating flow direction arrow and identification of fluid being conveyed.

2.07 CEILING TACKS

A. Description: Steel with 3/4 inch diameter color coded head.

PART 3 EXECUTION

3.01 PREPARATION

A. Degrease and clean surfaces to receive adhesive for identification materials.

B. Prepare surfaces in accordance with Section 09 9123 for stencil painting.

3.02 INSTALLATION

A. Install nameplates with corrosive-resistant mechanical fasteners, or adhesive. Apply with sufficient adhesive to ensure permanent adhesion and seal with clear lacquer.

B. Install tags with corrosion resistant chain.

C. Apply stencil painting in accordance with Section 09 9123.

D. Install plastic pipe markers in accordance with manufacturer's instructions.

E. Install plastic tape pipe markers complete around pipe in accordance with manufacturer's instructions.

F. Use tags on piping 3/4 inch diameter and smaller.
   1. Identify service, flow direction, and pressure.
   2. Install in clear view and align with axis of piping.
   3. Locate identification not to exceed 20 feet on straight runs including risers and drops, adjacent to each valve and Tee, at each side of penetration of structure or enclosure, and at each obstruction.

G. Install ductwork with plastic nameplates. Identify with air handling unit identification number and area served. Locate identification at air handling unit, at each side of penetration of structure or enclosure, and at each obstruction.

H. Locate ceiling tacks to locate valves or dampers above lay-in panel ceilings. Locate in corner of panel closest to equipment.

END OF SECTION

SECTION 23 0593
TESTING, ADJUSTING, AND BALANCING FOR HVAC

PART 1 GENERAL

1.01 SECTION INCLUDES

A. Testing, adjustment, and balancing of air systems.

B. Measurement of final operating condition of HVAC systems.

1.02 RELATED REQUIREMENTS

A. Section 01 9113 - General Commissioning Requirements: Commissioning requirements that apply to all types of work.

B. Section 23 0800 - Commissioning of HVAC.

1.03 REFERENCE STANDARDS

A. AABC (NSTSB) - AABC National Standards for Total System Balance, 7th Edition 2016.

B. ASHRAE Std 111 - Measurement, Testing, Adjusting, and Balancing of Building HVAC Systems 2008, with Errata (2019).

C. SMACNA (TAB) - HVAC Systems Testing, Adjusting and Balancing 2002.

1.04 SUBMITTALS

A. See Section 01 3000 - Administrative Requirements, for submittal procedures.

B. Installer Qualifications: Submit name of adjusting and balancing agency and TAB supervisor for approval within 30 days after award of Contract.

C. TAB Plan: Submit a written plan indicating the testing, adjusting, and balancing standard to be followed and the specific approach for each system and component.
   1. Include at least the following in the plan:
      a. List of all air flow, water flow, sound level, system capacity and efficiency measurements to be performed and a description of specific test procedures, parameters, formulas to be used.
      b. Copy of field checkout sheets and logs to be used, listing each piece of equipment to be tested, adjusted and balanced with the data cells to be gathered for each.
      c. Discussion of what notations and markings will be made on the duct and piping drawings during the process.
      d. Final test report forms to be used.
      e. Procedures for formal deficiency reports, including scope, frequency and distribution.

D. Final Report: Indicate deficiencies in systems that would prevent proper testing, adjusting, and balancing of systems and equipment to achieve specified performance.
   1. Revise TAB plan to reflect actual procedures and submit as part of final report.
   2. Submit draft copies of report for review prior to final acceptance of Project. Provide final copies for Architect and for inclusion in operating and maintenance manuals.
   3. Include actual instrument list, with manufacturer name, serial number, and date of calibration.
   4. Form of Test Reports: Where the TAB standard being followed recommends a report format use that; otherwise, follow ASHRAE Std 111.
   5. Units of Measure: Report data in both I-P (inch-pound) and SI (metric) units.

PART 2 PRODUCTS - NOT USED

PART 3 EXECUTION

3.01 GENERAL REQUIREMENTS

A. Perform total system balance in accordance with one of the following:

1. AABC (NSTSB), AABC National Standards for Total System Balance.
2. SMACNA (TAB).

B. Begin work after completion of systems to be tested, adjusted, or balanced and complete work prior to Substantial Completion of the project.

C. Where HVAC systems and/or components interface with life safety systems, including fire and smoke detection, alarm, and control, coordinate scheduling and testing and inspection procedures with the authorities having jurisdiction.

D. TAB Agency Qualifications:
1. Company specializing in the testing, adjusting, and balancing of systems specified in this section.
2. Having minimum of three years documented experience.
3. Certified by one of the following:
a. AABC, Associated Air Balance Council: www.aabc.com/#sle; upon completion submit AABC National Performance Guaranty.
b. NEBB, National Environmental Balancing Bureau: www.nebb.org/#sle.
c. TABB, The Testing, Adjusting, and Balancing Bureau of National Energy Management Institute: www.tabbcertified.org/#sle.

E. TAB Supervisor and Technician Qualifications: Certified by same organization as TAB agency.

F. Pre-Qualified TAB Agencies:
1. Engineered Systems & Energy Solutions, Inc. (ES2).
2. Oklahoma Diagnostic Services (ODS).
3. Optimum Energy Solutions, Inc. (OES).
4. Southwest Test and Balance (SWTB).

3.02 EXAMINATION

A. Verify that systems are complete and operable before commencing work. Ensure the following conditions:
1. Systems are started and operating in a safe and normal condition.
2. Temperature control systems are installed complete and operable.
3. Proper thermal overload protection is in place for electrical equipment.
4. Final filters are clean and in place. If required, install temporary media in addition to final filters.
5. Duct systems are clean of debris.
6. Fans are rotating correctly.
7. Fire and volume dampers are in place and open.
8. Air coil fins are cleaned and combed.
9. Access doors are closed and duct end caps are in place.
10. Air outlets are installed and connected.
11. Duct system leakage is minimized.
12. Hydronic systems are flushed, filled, and vented.
13. Pumps are rotating correctly.
14. Proper strainer baskets are clean and in place.
15. Service and balance valves are open.

B. Submit field reports. Report defects and deficiencies that will or could prevent proper system balance.

C. Beginning of work means acceptance of existing conditions.

3.03 PREPARATION

A. Hold a pre-balancing meeting at least one week prior to starting TAB work.
1. Require attendance by all installers whose work will be tested, adjusted, or balanced.

B. Provide instruments required for testing, adjusting, and balancing operations. Make instruments available to Architect to facilitate spot checks during testing.

C. Provide additional balancing devices as required.

3.04 ADJUSTMENT TOLERANCES

A. Air Handling Systems: Adjust to within plus or minus 5 percent of design for supply systems and plus or minus 10 percent of design for return and exhaust systems.

B. Air Outlets and Inlets: Adjust total to within plus 10 percent and minus 5 percent of design to space. Adjust outlets and inlets in space to within plus or minus 10 percent of design.

C. Hydronic Systems: Adjust to within plus or minus 10 percent of design.

3.05 RECORDING AND ADJUSTING

A. Ensure recorded data represents actual measured or observed conditions.

B. Permanently mark settings of valves, dampers, and other adjustment devices allowing settings to be restored. Set and lock memory stops.

C. After adjustment, take measurements to verify balance has not been disrupted or that such disruption has been rectified.

D. Leave systems in proper working order, replacing belt guards, closing access doors, closing doors to electrical switch boxes, and restoring thermostats to specified settings.

3.06 AIR SYSTEM PROCEDURE

A. Adjust air handling and distribution systems to provide required or design supply, return, and exhaust air quantities at site altitude.

B. Make air quantity measurements in ducts by Pitot tube traverse of entire cross sectional area of duct.

C. Measure air quantities at air inlets and outlets.

D. Adjust distribution system to obtain uniform space temperatures free from objectionable drafts and noise.

E. Use volume control devices to regulate air quantities only to extend that adjustments do not create objectionable air motion or sound levels. Effect volume control by duct internal devices such as dampers and splitters.

F. Vary total system air quantities by adjustment of fan speeds. Provide drive changes required. Vary branch air quantities by damper regulation.

G. Provide system schematic with required and actual air quantities recorded at each outlet or inlet.

H. Measure static air pressure conditions on air supply units, including filter and coil pressure drops, and total pressure across the fan. Make allowances for 50 percent loading of filters.

I. Adjust outside air automatic dampers, outside air, return air, and exhaust dampers for design conditions.

J. Measure temperature conditions across outside air, return air, and exhaust dampers to check leakage.

K. Where modulating dampers are provided, take measurements and balance at extreme conditions. Balance variable volume systems at maximum air flow rate, full cooling, and at minimum air flow rate, full heating.

L. Check multi-zone units for motorized damper leakage. Adjust air quantities with mixing dampers set first for cooling, then heating, then modulating.

M. For variable air volume system powered units set volume controller to air flow setting indicated. Confirm connections properly made and confirm proper operation for automatic variable air volume

temperature control.

N. On fan powered VAV boxes, adjust air flow switches for proper operation.

3.07 MINIMUM DATA TO BE REPORTED

A. Electric Motors:
1. Manufacturer.
2. Model/Frame.
3. HP/BHP.
4. Phase, voltage, amperage; nameplate, actual, no load.
5. RPM.
6. Service factor.
7. Starter size, rating, heater elements.
8. Sheave Make/Size/Bore.

B. V-Belt Drives:
1. Identification/location.
2. Required driven RPM.
3. Driven sheave, diameter and RPM.
4. Belt, size and quantity.
5. Motor sheave diameter and RPM.
6. Center to center distance, maximum, minimum, and actual.

C. Air Cooled Condensers:
1. Identification/number.
2. Location.
3. Manufacturer.
4. Model number.
5. Serial number.
6. Entering DB air temperature, design and actual.
7. Leaving DB air temperature, design and actual.
8. Number of compressors.

D. Cooling Coils:
1. Identification/number.
2. Location.
3. Service.
4. Manufacturer.
5. Air flow, design and actual.
6. Leaving air DB temperature, design and actual.
7. Leaving air WB temperature, design and actual.
8. Entering water temperature, design and actual.
9. Leaving water temperature, design and actual.
10. Saturated suction temperature, design and actual.
11. Air pressure drop, design and actual.

E. Heating Coils:
1. Identification/number.
2. Location.
3. Service.
4. Manufacturer.
5. Air flow, design and actual.

6. Entering air temperature, design and actual.
7. Leaving air temperature, design and actual.
8. Air pressure drop, design and actual.

F. Air Moving Equipment:
1. Location.
2. Manufacturer.
3. Model number.
4. Serial number.
5. Arrangement/Class/Discharge.
6. Air flow, specified and actual.
7. Return air flow, specified and actual.
8. Outside air flow, specified and actual.
9. Total static pressure (total external), specified and actual.
10. Inlet pressure.
11. Discharge pressure.
12. Sheave Make/Size/Bore.
13. Number of Belts/Make/Size.
14. Fan RPM.

G. Return Air/Outside Air:
1. Identification/location.
2. Design air flow.
3. Actual air flow.
4. Design return air flow.
5. Actual return air flow.
6. Design outside air flow.
7. Actual outside air flow.
8. Return air temperature.
9. Outside air temperature.
10. Required mixed air temperature.
11. Actual mixed air temperature.
12. Design outside/return air ratio.
13. Actual outside/return air ratio.

H. Exhaust Fans:
1. Location.
2. Manufacturer.
3. Model number.
4. Serial number.
5. Air flow, specified and actual.
6. Total static pressure (total external), specified and actual.
7. Inlet pressure.
8. Discharge pressure.
9. Sheave Make/Size/Bore.
10. Number of Belts/Make/Size.
11. Fan RPM.

I. Duct Traverses:
1. System zone/branch.
2. Duct size.

3. Area.
4. Design velocity.
5. Design air flow.
6. Test velocity.
7. Test air flow.
8. Duct static pressure.
9. Air temperature.
10. Air correction factor.

END OF SECTION

SECTION 23 0713
DUCT INSULATION

PART 1 GENERAL

1.01 SECTION INCLUDES

A. Duct insulation.

B. Duct liner.

C. Jacketing and accessories.

1.02 RELATED REQUIREMENTS

A. Section 07 8400 - Firestopping.

B. Section 23 0553 - Identification for HVAC Piping and Equipment.

C. Section 23 3100 - HVAC Ducts and Casings: Glass fiber ducts.

1.03 REFERENCE STANDARDS

A. ASTM C518 - Standard Test Method for Steady-State Thermal Transmission Properties by Means of the Heat Flow Meter Apparatus 2021.

B. ASTM C553 - Standard Specification for Mineral Fiber Blanket Thermal Insulation for Commercial and Industrial Applications 2013 (Reapproved 2019).

C. ASTM C612 - Standard Specification for Mineral Fiber Block and Board Thermal Insulation 2014 (Reapproved 2019).

D. ASTM C916 - Standard Specification for Adhesives for Duct Thermal Insulation 2020.

E. ASTM C1071 - Standard Specification for Fibrous Glass Duct Lining Insulation (Thermal and Sound Absorbing Material) 2019.

F. ASTM E84 - Standard Test Method for Surface Burning Characteristics of Building Materials 2022.

G. ASTM E96/E96M - Standard Test Methods for Gravimetric Determination of Water Vapor Transmission Rate of Materials 2022.

H. ASTM G21 - Standard Practice for Determining Resistance of Synthetic Polymeric Materials to Fungi 2015, with Editorial Revision (2021).

I. SMACNA (DCS) - HVAC Duct Construction Standards Metal and Flexible 2021.

J. UL 723 - Standard for Test for Surface Burning Characteristics of Building Materials Current Edition, Including All Revisions.

1.04 SUBMITTALS

A. See Section 01 3000 - Administrative Requirements for submittal procedures.

B. Product Data: Provide product description, thermal characteristics, list of materials and thickness for each service, and locations.

1.05 DELIVERY, STORAGE, AND HANDLING

A. Accept materials on site in original factory packaging, labelled with manufacturer's identification, including product density and thickness.

B. Protect insulation from weather and construction traffic, dirt, water, chemical, and mechanical damage, by storing in original wrapping.

PART 2 PRODUCTS

2.01 REGULATORY REQUIRMENTS

A. Surface Burning Characteristics: Flame spread index/Smoke developed index of 25/50, maximum, when tested in accordance with ASTM E84 or UL 723.

2.02 GLASS FIBER, FLEXIBLE

A. Manufacturer:
   1. Johns Manville: www.jm.com.
   2. Knauf Insulation: www.knaufinsulation.com/#sle.
   3. Owens Corning Corporation: www.ocbuildingspec.com.
   4. CertainTeed Corporation: www.certainteed.com.

B. Insulation: ASTM C553; flexible, noncombustible blanket.
   1. K value: 0.36 at 75 degrees F, when tested in accordance with ASTM C518.
   2. Maximum Service Temperature: 1,200 degrees F.
   3. Maximum Water Vapor Absorption: 5.0 percent by weight.

C. Vapor Barrier Jacket:
   1. Kraft paper with glass fiber yarn and bonded to aluminized film.
   2. Moisture Vapor Permeability: 0.02 perm inch, when tested in accordance with ASTM E96/E96M.
   3. Secure with pressure-sensitive tape.

D. Vapor Barrier Tape:
   1. Kraft paper reinforced with glass fiber yarn and bonded to aluminized film, with pressure-sensitive rubber-based adhesive.

E. Outdoor Vapor Barrier Mastic:
   1. Vinyl emulsion type acrylic or mastic, compatible with insulation, black color.

F. Tie Wire: Annealed steel, 16 gauge, 0.0508 inch diameter.

2.03 GLASS FIBER, RIGID

A. Manufacturer:
   1. Johns Manville: www.jm.com.
   2. Knauf Insulation: www.knaufinsulation.com/#sle.
   3. Owens Corning Corporation; 700 Series FIBERGLAS Insulation: www.ocbuildingspec.com/#sle.
   4. CertainTeed Corporation: www.certainteed.com.

B. Insulation: ASTM C612; rigid, noncombustible blanket.
   1. K Value: 0.24 at 75 degrees F, when tested in accordance with ASTM C518.
   2. Maximum Service Temperature: 450 degrees F.
   3. Maximum Water Vapor Absorption: 5.0 percent.
   4. Maximum Density: 8.0 pcf.

C. Vapor Barrier Jacket:
   1. Kraft paper with glass fiber yarn and bonded to aluminized film.
   2. Moisture Vapor Permeability: 0.02 perm inch, when tested in accordance with ASTM E96/E96M.
   3. Secure with pressure-sensitive tape.

D. Vapor Barrier Tape:
   1. Kraft paper reinforced with glass fiber yarn and bonded to aluminized film, with pressure-sensitive rubber-based adhesive.

E. Indoor Vapor Barrier Finish:
   1. Cloth: Untreated; 9 oz/sq yd weight, glass fabric.

2. Vinyl emulsion type acrylic, compatible with insulation, black color.

2.04 JACKETING AND ACCESSORIES

A. Canvas Jacket: UL listed 6 oz/sq yd plain weave cotton fabric treated with dilute fire-retardant lagging adhesive.

B. Aluminum Jacket:
   1. Thickness: 0.016 inch sheet.
   2. Finish: Smooth.
   3. Joining: Longitudinal slip joints and 2 inch laps.
   4. Fittings: 0.016 inch thick die-shaped fitting covers with factory-attached protective liner.
   5. Metal Jacket Bands: 3/8 inch wide; 0.015 inch thick aluminum.

2.05 DUCT LINER

A. Manufacturers:
   1. Johns Manville: www.jm.com.
   2. Knauf Insulation: www.knaufinsulation.com/#sle.
   3. Owens Corning Corporation: www.ocbuildingspec.com/sle.
   4. CertainTeed Corporation: www.certainteed.com.

B. Glass Fiber Insulation: Non-corrosive, incombustible glass fiber complying with ASTM C1071; flexible blanket, rigid board, and preformed round liner board; impregnated surface and edges coated with poly vinyl acetate polymer, acrylic polymer, or black composite.
   1. Fungal Resistance: No growth when tested according to ASTM G21.
   2. Apparent Thermal Conductivity: Maximum of 0.31 at 75 degrees F.
   3. Service Temperature: Up to 250 degrees F.
   4. Rated Velocity on Coated Air Side for Air Erosion: 5,000 fpm, minimum.
   5. Minimum Noise Reduction Coefficients:
      a. 1/2 inch Thickness: 0.30.
      b. 1 inch Thickness: 0.45.
      c. 1-1/2 inches Thickness: 0.60.
      d. 2 inch Thickness: 0.70.

C. Adhesive: Waterproof, fire-retardant type, ASTM C916.

D. Liner Fasteners: Galvanized steel, self-adhesive pad with integral head.

PART 3 EXECUTION

3.01 EXAMINATION

A. Test ductwork for design pressure prior to applying insulation materials.

B. Verify that surfaces are clean, foreign material removed, and dry.

3.02 INSTALLATION

A. Install in accordance with manufacturer's instructions.

B. Insulated Ducts Conveying Air Below Ambient Temperature:
   1. Provide insulation with vapor barrier jackets.
   2. Finish with tape and vapor barrier jacket.
   3. Continue insulation through walls, sleeves, hangers, and other duct penetrations.
   4. Insulate entire system, including fittings, joints, flanges, fire dampers, flexible connections, and expansion joints.

C. Insulated Ducts Conveying Air Above Ambient Temperature:
   1. Provide with or without standard vapor barrier jacket.

2. Insulate fittings and joints. Where service access is required, bevel and seal ends of insulation.

D. Ducts Exposed in Mechanical Equipment Rooms or Finished Spaces (below 10 feet above finished floor): Finish with canvas jacket sized for finish painting.

E. External Duct Insulation Application:
1. Secure insulation with vapor barrier with wires and seal jacket joints with vapor barrier adhesive or tape to match jacket.
2. Secure insulation without vapor barrier with staples, tape, or wires.
3. Install without sag on underside of duct. Use adhesive or mechanical fasteners where necessary to prevent sagging. Lift duct off trapeze hangers and insert spacers.
4. Seal vapor barrier penetrations by mechanical fasteners with vapor barrier adhesive.
5. Stop and point insulation around access doors and damper operators to allow operation without disturbing wrapping.

F. Duct and Plenum Liner Application:
1. Adhere insulation with adhesive for 90 percent coverage.
2. Secure insulation with mechanical liner fasteners. Refer to SMACNA (DCS) for spacing.
3. Seal and smooth joints. Seal and coat transverse joints.
4. Seal liner surface penetrations with adhesive.
5. Duct dimensions indicated are net inside dimensions required for air-flow. Increase duct size to allow for insulation thickness.

3.03 SCHEDULES

A. Supply, Return, and Outdoor Air Ducts: Minimum of 2 inches thick and installed R value of 6.0 at 75 deg F.

END OF SECTION

SECTION 23 0719
HVAC PIPING INSULATION

PART 1 GENERAL

1.01 SECTION INCLUDES

A. Piping insulation.

B. Flexible removable and reusable blanket insulation.

C. Jacketing and accessories.

1.02 RELATED REQUIREMENTS

A. Section 07 8400 - Firestopping.

B. Section 23 2113 - Hydronic Piping: Placement of hangers and hanger inserts.

C. Section 23 2213 - Steam and Condensate Heating Piping: Placement of hangers and hanger inserts.

D. Section 23 2300 - Refrigerant Piping: Placement of inserts.

1.03 REFERENCE STANDARDS

A. ASTM C177 - Standard Test Method for Steady-State Heat Flux Measurements and Thermal Transmission Properties by Means of the Guarded-Hot-Plate Apparatus 2019.

B. ASTM C195 - Standard Specification for Mineral Fiber Thermal Insulating Cement 2007 (Reapproved 2019).

C. ASTM C534/C534M - Standard Specification for Preformed Flexible Elastomeric Cellular Thermal Insulation in Sheet and Tubular Form 2020a.

D. ASTM C547 - Standard Specification for Mineral Fiber Pipe Insulation 2022.

E. ASTM C552 - Standard Specification for Cellular Glass Thermal Insulation 2022.

F. ASTM C795 - Standard Specification for Thermal Insulation for Use in Contact with Austenitic Stainless Steel 2008 (Reapproved 2018).

G. ASTM E84 - Standard Test Method for Surface Burning Characteristics of Building Materials 2022.

H. ASTM E96/E96M - Standard Test Methods for Gravimetric Determination of Water Vapor Transmission Rate of Materials 2022.

I. UL 723 - Standard for Test for Surface Burning Characteristics of Building Materials Current Edition, Including All Revisions.

1.04 SUBMITTALS

A. See Section 01 3000 - Administrative Requirements for submittal procedures.

B. Product Data: Provide product description, thermal characteristics, list of materials and thickness for each service, and locations.

1.05 QUALITY ASSURANCE

A. Manufacturer Qualifications: Company specializing in manufacturing the Products specified in this section with not less than three years of documented experience.

B. Applicator Qualifications: Company specializing in performing the type of work specified in this section with minimum 3 years of experience.

1.06 DELIVERY, STORAGE, AND HANDLING

A. Accept materials on site, labeled with manufacturer's identification, product density, and thickness.

1.07 FIELD CONDITIONS

A. Maintain ambient conditions required by manufacturers of each product.

B. Maintain temperature before, during, and after installation for minimum of 24 hours.

PART 2 PRODUCTS

2.01 REGULATORY REQUIREMENTS

A. Surface Burning Characteristics: Flame spread index/Smoke developed index of 25/50, maximum, when tested in accordance with ASTM E84 or UL 723.

2.02 GLASS FIBER, RIGID

A. Manufacturers:
   1. CertainTeed Corporation: www.certainteed.com.
   2. Johns Manville Corporation: www.jm.com.
   3. Knauf Insulation: www.knaufinsulation.com/#sle.
   4. Owens Corning Corporation: www.ocbuildingspec.com/#sle.

B. Insulation: ASTM C547 and ASTM C795; rigid molded, noncombustible.
   1. K Value: ASTM C177, 0.24 at 75 degrees F.
   2. Maximum Service Temperature: 850 degrees F.
   3. Maximum Moisture Absorption: 0.2 percent by volume.

C. Vapor Barrier Jacket: White kraft paper with glass fiber yarn, bonded to aluminized film; moisture vapor transmission when tested in accordance with ASTM E96/E96M of 0.02 perm-inches.

D. Tie Wire: 0.048 inch stainless steel with twisted ends on maximum 12 inch centers.

E. Vapor Barrier Lap Adhesive: Compatible with insulation.

F. Insulating Cement/Mastic: ASTM C195; hydraulic setting on mineral wool.

2.03 CELLULAR GLASS

A. Manufacturers:
   1. Owens Corning Corporation: www.ocbuildingspec.com/#sle.

B. Pipe and Tubing Insulation: ASTM C552, Type II, Grade 6.
   1. K Value: 0.35 at 100 degrees F.
   2. Service Temperature Range: From 250 degrees F to 800 degrees F.
   3. Water Vapor Permeability: 0.005 perm inch maximum per inch.
   4. Water Absorption: 0.5 percent by volume, maximum.
   5. Density: A minimum of 6.12 pcf.

C. Block Insulation: ASTM C552, Type I, Grade 6.
   1. K Value: 0.35 at 100 degrees F.
   2. Service Temperature: 800 degrees F, maximum.
   3. Water Vapor Permeability: 0.005 perm inch maximum per inch.
   4. Water Absorption: 0.5 percent by volume, maximum.

2.04 FLEXIBLE ELASTOMERIC CELLULAR INSULATION

A. Manufacturers:
   1. Aeroflex USA, Inc: www.aeroflexusa.com.
   2. Armacell LLC: www.armacell.us.
   3. K-Flex USA LLC: www.kflexusa.com.

B. Insulation: Preformed flexible elastomeric cellular rubber insulation complying with ASTM C534/C534M Grade 1; use molded tubular material wherever possible.

1. Minimum Service Temperature: Minus 40 degrees F.
2. Maximum Service Temperature: 180 degrees F.
3. Connection: Waterproof vapor barrier adhesive.

C. Elastomeric Foam Adhesive: Air dried, contact adhesive, compatible with insulation.

2.05 JACKETING AND ACCESSORIES

A. PVC Plastic.
1. Jacket: One piece molded type fitting covers and sheet material, off-white color.
a. Minimum Service Temperature: 0 degrees F.
b. Maximum Service Temperature: 150 degrees F.
c. Moisture Vapor Permeability: 0.002 perm inch, maximum, when tested in accordance with ASTM E96/E96M.
d. Thickness: 10 mil, 0.010 inch.
e. Connections: Brush on welding adhesive.
2. Covering Adhesive Mastic: Compatible with insulation.

B. Canvas Jacket: UL listed 6 oz/sq yd plain weave cotton fabric treated with dilute fire-retardant lagging adhesive.
1. Lagging Adhesive: Compatible with insulation.

PART 3 EXECUTION

3.01 EXAMINATION

A. Test piping for design pressure, liquid tightness, and continuity prior to applying insulation materials.

B. Verify that surfaces are clean and dry, with foreign material removed.

3.02 INSTALLATION

A. Install in accordance with manufacturer's instructions.

B. Insulated Pipes Conveying Fluids Below Ambient Temperature:
1. Insulate entire system, including fittings, valves, unions, flanges, strainers, flexible connections, pump bodies, and expansion joints.

C. Glass Fiber Insulated Pipes Conveying Fluids Below Ambient Temperature:
1. Provide vapor barrier jackets, factory-applied or field-applied; secure with self-sealing longitudinal laps and butt strips with pressure-sensitive adhesive. Secure with outward clinch expanding staples and vapor barrier mastic.
2. Insulate fittings, joints, and valves with molded insulation of like material and thickness as adjacent pipe. Finish with glass cloth and vapor barrier adhesive or PVC fitting covers.

D. For hot piping conveying fluids 140 degrees F or less, do not insulate flanges and unions at equipment, but bevel and seal ends of insulation.

E. For hot piping conveying fluids over 140 degrees F, insulate flanges and unions at equipment.

F. Glass Fiber Insulated Pipes Conveying Fluids Above Ambient Temperature:
1. Provide standard jackets, with or without vapor barrier, factory-applied, or field-applied. Secure with self-sealing longitudinal laps and butt strips with pressure-sensitive adhesive. Secure with outward clinch expanding staples.
2. Insulate fittings, joints, and valves with insulation of like material and thickness as adjoining pipe. Finish with glass cloth and adhesive or PVC fitting covers.

G. Inserts and Shields:
1. Application: Piping 1-1/2 inches diameter or larger.
2. Shields: Galvanized steel between pipe hangers or pipe hanger rolls and inserts.

3. Insert location: Between support shield and piping and under the finish jacket.
4. Insert Configuration: Minimum 6 inches long, of same thickness and contour as adjoining insulation; may be factory fabricated.
5. Insert Material: Hydrous calcium silicate insulation or other heavy density insulating material suitable for the planned temperature range.

H. Continue insulation through walls, sleeves, pipe hangers, and other pipe penetrations. Finish at supports, protrusions, and interruptions. At fire separations, see Section 07 8400.

I. Pipe Exposed in Mechanical Equipment Rooms or Finished Spaces (less than 10 feet above finished floor): Finish with canvas jacket sized for finish painting.

J. Exterior Applications: Provide vapor barrier jacket. Insulate fittings, joints, and valves with insulation of like material and thickness as adjoining pipe, and finish with glass mesh reinforced vapor barrier cement. Cover with aluminum jacket with seams located on bottom side of horizontal piping. Provide two coats of UV resistant finish for flexible elastomeric cellular insulation without jacketing.

K. Buried Piping: Provide factory-fabricated assembly with inner all-purpose service jacket with self-sealing lap, and asphalt impregnated open mesh glass fabric, with 1 mil, 0.001 inch thick aluminum foil sandwiched between three layers of bituminous compound; outer surface faced with polyester film.

L. Heat Traced Piping: Insulate fittings, joints, and valves with insulation of like material, thickness, and finish as adjoining pipe. Size large enough to enclose pipe and heat tracer. Cover with aluminum jacket with seams located on bottom side of horizontal piping.

3.03 SCHEDULE

A. Cooling Systems:
1. Condenser Water: 2" thick cellular glass.
2. Cold Condensate Drains: 1-1/2" flexible elastomeric.
3. Condensate Drains from Cooling Coils: 1/2" flexible elastromeric.
4. Refrigerant Suction: 1" flexible elastomeric.

END OF SECTION

SECTION 23 2113
HYDRONIC PIPING

PART 1 GENERAL

1.01 SECTION INCLUDES

A. Hydronic system requirements.

B. Equipment drains and overflows.

C. Pipe hangers and supports.

D. Unions, flanges, mechanical couplings, and dielectric connections.

1.02 RELATED REQUIREMENTS

A. Section 08 3100 - Access Doors and Panels.

B. Section 23 0516 - Expansion Fittings and Loops for HVAC Piping.

C. Section 23 0523 - General-Duty Valves for HVAC Piping.

D. Section 23 0548 - Vibration and Seismic Controls for HVAC.

E. Section 23 0553 - Identification for HVAC Piping and Equipment.

F. Section 23 0719 - HVAC Piping Insulation.

G. Section 23 2114 - Hydronic Specialties.

H. Section 23 2500 - HVAC Water Treatment: Pipe cleaning.

I. Section 26 0583 - Wiring Connections: Electrical characteristics and wiring connections.

1.03 REFERENCE STANDARDS

A. ASME BPVC-IX - Boiler and Pressure Vessel Code, Section IX - Qualification Standard for Welding, Brazing, and Fusing Procedures; Welders; Brazers; and Welding, Brazing, and Fusing Operators 2021.

B. ASME B16.3 - Malleable Iron Threaded Fittings: Classes 150 and 300 2021.

C. ASME B16.18 - Cast Copper Alloy Solder Joint Pressure Fittings 2021.

D. ASME B16.22 - Wrought Copper and Copper Alloy Solder-Joint Pressure Fittings 2021.

E. ASME B31.9 - Building Services Piping 2020.

F. ASTM A53/A53M - Standard Specification for Pipe, Steel, Black and Hot-Dipped, Zinc-Coated, Welded and Seamless 2020.

G. ASTM A106/A106M - Standard Specification for Seamless Carbon Steel Pipe for High-Temperature Service 2019a.

H. ASTM A123/A123M - Standard Specification for Zinc (Hot-Dip Galvanized) Coatings on Iron and Steel Products 2017.

I. ASTM A536 - Standard Specification for Ductile Iron Castings 1984, with Editorial Revision (2019).

J. ASTM B32 - Standard Specification for Solder Metal 2020.

K. ASTM B88 - Standard Specification for Seamless Copper Water Tube 2020.

L. ASTM B88M - Standard Specification for Seamless Copper Water Tube (Metric) 2020.

M. ASTM D1785 - Standard Specification for Poly(Vinyl Chloride) (PVC) Plastic Pipe, Schedules 40, 80, and 120 2021a.

N. ASTM D2241 - Standard Specification for Poly(Vinyl Chloride) (PVC) Pressure-Rated Pipe (SDR Series) 2020.

O. ASTM D2466 - Standard Specification for Poly(Vinyl Chloride) (PVC) Plastic Pipe Fittings, Schedule 40 2021.

P. ASTM D2467 - Standard Specification for Poly(Vinyl Chloride) (PVC) Plastic Pipe Fittings, Schedule 80 2020.

Q. ASTM D2855 - Standard Practice for the Two-Step (Primer and Solvent Cement) Method of Joining Poly (Vinyl Chloride) (PVC) or Chlorinated Poly (Vinyl Chloride) (CPVC) Pipe and Piping Components with Tapered Sockets 2020.

R. ASTM F1476 - Standard Specification for Performance of Gasketed Mechanical Couplings for Use in Piping Applications 2007 (Reapproved 2019).

S. AWWA C606 - Grooved and Shouldered Joints 2015.

T. MSS SP-58 - Pipe Hangers and Supports - Materials, Design, Manufacture, Selection, Application, and Installation 2018, with Amendment (2019).

1.04 SUBMITTALS

A. See Section 01 3000 - Administrative Requirements for submittal procedures.

B. Product Data:
   1. Include data on pipe materials, pipe fittings, valves, and accessories.
   2. Provide manufacturers catalog information.
   3. Indicate valve data and ratings.
   4. Show grooved joint couplings, fittings, valves, and specialties on drawings and product submittals, specifically identified with the manufacturer's style or series designation.

1.05 QUALITY ASSURANCE

A. Manufacturer Qualifications: Company specializing in manufacturing products of the type specified in this section, with minimum three years of documented experience.

B. Installer Qualifications: Company specializing in performing work of the type specified in this section, with minimum three years of experience.

C. Provide all grooved joint couplings, fittings, valves, specialties, and grooving tools from a single manufacturer.

D. Date stamp all castings used for coupling housings, fittings, valve bodies, etc. for quality assurance and traceability.

E. Coupling Manufacturer:
   1. Perform on-site training by factory-trained representative to the Contractor's field personnel in the proper use of grooving tools and installation of grooved joint products.
   2. Periodic job site visits by factory-trained representative to ensure best practices in grooved joint installation.

F. Welder Qualifications: Certify in accordance with ASME BPVC-IX.

1.06 DELIVERY, STORAGE, AND HANDLING

A. Accept valves on site in shipping containers with labeling in place. Inspect for damage.

B. Provide temporary protective coating on cast iron and steel valves.

C. Provide temporary end caps and closures on piping and fittings. Maintain in place until installation.

D. Protect piping systems from entry of foreign materials by temporary covers, completing sections of the work, and isolating parts of completed system.

1.07 FIELD CONDITIONS

A. Do not install underground piping when bedding is wet or frozen.

PART 2 PRODUCTS

2.01 HYDRONIC SYSTEM REQUIREMENTS

A. Comply with ASME B31.9 and applicable federal, state, and local regulations.

B. Piping: Provide piping, fittings, hangers, and supports as required, as indicated, and as follows:
   1. Where more than one piping system material is specified, provide joining fittings that are compatible with piping materials and ensure that the integrity of the system is not jeopardized.
   2. Use non-conducting dielectric connections whenever jointing dissimilar metals.
   3. Grooved mechanical joints may be used in accessible locations only.
      a. Accessible locations include those exposed on interior of building, in pipe chases, and in mechanical rooms, aboveground outdoors, and as approved by Architect.
      b. Grooved mechanical connections and joints comply with AWWA C606.
         1) Ductile Iron: Comply with ASTM A536, Grade 65-45-12.
         2) Steel: Comply with ASTM A106/A106M, Grade B or ASTM A53/A53M.
      c. Use rigid joints unless otherwise indicated.
   4. Provide pipe hangers and supports in accordance with ASME B31.9 or MSS SP-58 unless indicated otherwise.

C. Pipe-to-Valve and Pipe-to-Equipment Connections: Use flanges, unions, or grooved couplings to allow disconnection of components for servicing; do not use direct welded, soldered, or threaded connections.

D. Valves: Provide valves where indicated:
   1. Provide drain valves where indicated, and if not indicated, provide at least at main shut-off, low points of piping, bases of vertical risers, and at equipment. Use 3/4 inch gate valves with cap; pipe to nearest floor drain.
   2. On discharge of condenser water pumps, use spring-loaded check valves.
   3. Isolate equipment using butterfly valves with lug end flanges or grooved mechanical couplings.
   4. For throttling, bypass, or manual flow control services, use globe, ball, or butterfly valves.
   5. For throttling and isolation service in chilled and condenser water systems, use only butterfly valves.
   6. In heating water, chilled water, or condenser water systems, butterfly valves may be used interchangeably with gate and globe valves.
   7. For shut-off and to isolate parts of systems or vertical risers, use gate, ball, or butterfly valves.
   8. For throttling service, use plug cocks. Use non-lubricated plug cocks only when shut-off or isolating valves are also provided.

2.02 EQUIPMENT DRAINS AND OVERFLOWS

A. Steel Pipe: ASTM A53/A53M, Schedule 40 galvanized; using one of the following joint types:
   1. Threaded Joints: Galvanized cast iron, or ASME B16.3 malleable iron fittings.
   2. Grooved Joints: AWWA C606 grooved pipe, fittings of same material, and mechanical couplings.

B. Copper Tube: ASTM B88 (ASTM B88M), Type L (B), drawn; using one of the following joint types:
   1. Solder Joints: ASME B16.18 cast brass/bronze or ASME B16.22 solder wrought copper fittings; ASTM B32 lead-free solder, HB alloy (95-5 tin-antimony) or tin and silver.

C. PVC Pipe: ASTM D1785, Schedule 40, or ASTM D2241, SDR 21 or 26.
   1. Fittings: ASTM D2466 or D2467, PVC.
   2. Joints: Solvent welded in accordance with ASTM D2855.

2.03 PIPE HANGERS AND SUPPORTS

A. Provide hangers and supports that comply with MSS SP-58.

1. If type of hanger or support for a particular situation is not indicated, select appropriate type using MSS SP-58 recommendations.

B. In grooved installations, use rigid couplings with offsetting angle-pattern bolt pads or with wedge-shaped grooves in header piping to permit support and hanging in accordance with ASME B31.9.

C. Rooftop Supports for Low-Slope Roofs: Steel pedestals with bases that rest on top of roofing membrane, not requiring any attachment to the roof structure and not penetrating the roofing assembly, with support fixtures as specified; and as follows:
1. Bases: High-density polypropylene.
2. Base Sizes: As required to distribute load sufficiently to prevent indentation of roofing assembly.
3. Steel Components: Stainless steel or carbon steel hot-dip galvanized after fabrication in accordance with ASTM A123/A123M.
4. Attachment/Support Fixtures: As recommended by manufacturer, same type as indicated for equivalent indoor hangers and supports; corrosion-resistant material.
5. Height: Provide minimum clearance of 6 inches under pipe to top of roofing.
6. Manufacturers:
   a. PHP Systems/Design: www.phpsd.com/#sle.

2.04 UNIONS, FLANGES, MECHANICAL COUPLINGS, AND DIELECTRIC CONNECTIONS

A. Unions for Pipe of 2 Inches and Less:
1. Ferrous Piping: 150 psi brass or malleable iron, threaded.
2. Copper Pipe: Bronze, soldered joints.

B. Flanges for Pipe 2 Inches and Greater:
1. Ferrous Piping: 150 psig forged steel, slip-on.
2. Copper Piping: Bronze.
3. Gaskets: 1/16 inch thick, preformed neoprene.

C. Mechanical Couplings for Grooved and Shouldered Joints: Two or more curved housing segments with continuous key to engage pipe groove, circular C-profile gasket, and bolts to secure and compress gasket.
1. Dimensions and Testing: In accordance with AWWA C606.
2. Mechanical Couplings: Comply with ASTM F1476.
3. Housing Material: Ductile iron, galvanized complying with ASTM A536.
4. Gasket Material: EPDM suitable for operating temperature range from minus 30 degrees F to 230 degrees F.
5. Bolts and Nuts: Hot dipped galvanized or zinc-electroplated steel.
6. When pipe is field grooved, provide coupling manufacturer's grooving tools.
7. Manufacturers:
   a. Grinnell Products, a Tyco Business: www.grinnell.com/#sle.
   b. Victaulic Company: www.victaulic.com/#sle.

D. Dielectric Connections:
1. Flanges:
   a. Dielectric flanges with same pressure ratings as standard flanges.
   b. Water impervious insulation barrier capable of limiting galvanic current to 1 percent of short circuit current in a corresponding bimetallic joint.
   c. Dry insulation barrier able to withstand 600-volt breakdown test.
   d. Construct of galvanized steel with threaded end connections to match connecting piping.
   e. Suitable for the required operating pressures and temperatures.

PART 3 EXECUTION

3.01 PREPARATION

A. Ream pipe and tube ends. Remove burrs. Bevel plain end ferrous pipe.

B. Prepare pipe for grooved mechanical joints as required by coupling manufacturer.

C. Remove scale and dirt on inside and outside before assembly.

D. Prepare piping connections to equipment using jointing system specified.

E. Keep open ends of pipe free from scale and dirt. Protect open ends with temporary plugs or caps.

F. After completion, fill, clean, and treat systems. See Section 23 2500 for additional requirements.

3.02 INSTALLATION

A. Install in accordance with manufacturer's instructions.

B. Install heating water, glycol, chilled water, condenser water, and engine exhaust piping to ASME B31.9 requirements.

C. PVC Pipe: Make solvent-welded joints in accordance with ASTM D2855.

D. Route piping in orderly manner, parallel to building structure, and maintain gradient.

E. Install piping to conserve building space and to avoid interference with use of space.

F. Group piping whenever practical at common elevations.

G. Sleeve pipe passing through partitions, walls, and floors.

H. Install firestopping to preserve fire resistance rating of partitions and other elements, using materials and methods specifiedin Division 07.

I. Slope piping and arrange to drain at low points.

J. Install piping to allow for expansion and contraction without stressing pipe, joints, or connected equipment. See Section 23 0516.

K. Grooved Joints:
   1. Install in accordance with the manufacturer's latest published installation instructions.

L. Inserts:

M. Provide clearance in hangers and from structure and other equipment for installation of insulation and access to valves and fittings. See Section 23 0719.

N. Provide access where valves and fittings are not exposed. Coordinate size and location of access doors with Section 08 3100.

O. Use eccentric reducers to maintain top of pipe level.

P. Where pipe support members are welded to structural building framing, scrape, brush clean, and apply one coat of zinc-rich primer to welds.

Q. Install valves with stems upright or horizontal, not inverted.

END OF SECTION

SECTION 23 2300
REFRIGERANT PIPING

PART 1 GENERAL

1.01 SECTION INCLUDES

A. Piping.
B. Refrigerant.
C. Moisture and liquid indicators.
D. Valves.
E. Strainers.
F. Check valves.
G. Pressure regulators.
H. Pressure relief valves.
I. Filter-driers.
J. Solenoid valves.
K. Expansion valves.
L. Receivers.
M. Flexible connections.
N. Engineered wall seals and insulation protection.

1.02 RELATED REQUIREMENTS

A. Section 07 8400 - Firestopping.
B. Section 08 3100 - Access Doors and Panels.
C. Section 09 9123 - Interior Painting.
D. Section 23 0716 - HVAC Equipment Insulation.
E. Section 23 0719 - HVAC Piping Insulation.
F. Section 26 0583 - Wiring Connections: Electrical characteristics and wiring connections.

1.03 REFERENCE STANDARDS

A. AHRI 495 - Performance Rating of Refrigerant Liquid Receivers 2005.
B. AHRI 710 - Performance Rating of Liquid-Line Driers 2009.
C. AHRI 750 - Thermostatic Refrigerant Expansion Valves 2007.
D. AHRI 760 - Performance Rating of Solenoid Valves for Use With Volatile Refrigerants 2007.
E. ASHRAE Std 15 - Safety Standard for Refrigeration Systems 2019, with All Amendments and Errata.
F. ASME BPVC-VIII-1 - Boiler and Pressure Vessel Code, Section VIII, Division 1: Rules for Construction of Pressure Vessels 2021.
G. ASME B16.22 - Wrought Copper and Copper Alloy Solder-Joint Pressure Fittings 2021.
H. ASME B31.5 - Refrigeration Piping and Heat Transfer Components 2020.
I. ASME B31.9 - Building Services Piping 2020.
J. ASTM A123/A123M - Standard Specification for Zinc (Hot-Dip Galvanized) Coatings on Iron and Steel Products 2017.

K. ASTM B280 - Standard Specification for Seamless Copper Tube for Air Conditioning and Refrigeration Field Service 2020.

L. ASTM E331 - Standard Test Method for Water Penetration of Exterior Windows, Skylights, Doors, and Curtain Walls by Uniform Static Air Pressure Difference 2000 (Reapproved 2016).

M. ASTM E283 - Standard Test Method for Determining the Rate of Air Leakage Through Exterior Windows, Curtain Walls, and Doors Under Specified Pressure Differences Across the Specimen 2004 (Reapproved 2012).

N. ASTM E2178 - Standard Test Method for Determining Air Leakage Rate and Calculation of Air Permeance of Building Materials 2021a.

O. ASTM E84 - Standard Test Method for Surface Burning Characteristics of Building Materials 2022.

P. ASTM E96/E96M - Standard Test Methods for Gravimetric Determination of Water Vapor Transmission Rate of Materials 2022.

Q. ASTM G153 - Standard Practice for Operating Enclosed Carbon Arc Light Apparatus for Exposure of Nonmetallic Materials 2013 (Reapproved 2021).

R. ASTM G21 - Standard Practice for Determining Resistance of Synthetic Polymeric Materials to Fungi 2015, with Editorial Revision (2021).

S. AWS A5.8M/A5.8 - Specification for Filler Metals for Brazing and Braze Welding 2019.

T. MSS SP-58 - Pipe Hangers and Supports - Materials, Design, Manufacture, Selection, Application, and Installation 2018, with Amendment (2019).

U. UL 429 - Electrically Operated Valves Current Edition, Including All Revisions.

1.04 SUBMITTALS

A. See Section 01 3000 - Administrative Requirements for submittal procedures.

B. Product Data: Provide general assembly of specialties, including manufacturers catalogue information. Provide manufacturers catalog data including load capacity.

C. Shop Drawings: Indicate schematic layout of system, including equipment, critical dimensions, and sizes.

D. Design Data: Submit design data indicating pipe sizing. Indicate load carrying capacity of trapeze, multiple pipe, and riser support hangers.

E. Maintenance Data: Include instructions for changing cartridges, assembly views, spare parts lists.

1.05 DELIVERY, STORAGE, AND HANDLING

A. Deliver and store piping and specialties in shipping containers with labeling in place.

B. Protect piping and specialties from entry of contaminating material by leaving end caps and plugs in place until installation.

C. Dehydrate and charge components such as piping and receivers, seal prior to shipment, until connected into system.

PART 2 PRODUCTS

2.01 SYSTEM DESCRIPTION

A. Filter-Driers:
   1. Use a filter-drier immediately ahead of liquid-line controls, such as thermostatic expansion valves, solenoid valves, and moisture indicators.

2.02 REGULATORY REQUIREMENTS

A. Comply with ASME B31.9 for installation of piping system.

2.03 PIPING

A. Copper Tube: ASTM B280, H58 hard drawn or O60 soft annealed.
   1. Fittings: ASME B16.22 wrought copper.
   2. Joints: Braze, AWS A5.8M/A5.8 BCuP silver/phosphorus/copper alloy.

B. Pipe Supports and Anchors:
   1. Provide hangers and supports that comply with MSS SP-58.
      a. If type of hanger or support for a particular situation is not indicated, select appropriate type using MSS SP-58 recommendations.
   2. Hangers for Pipe Sizes 1/2 to 1-1/2 Inch: Malleable iron adjustable swivel, split ring.
   3. Hangers for Pipe Sizes 2 Inches and Over: Carbon steel, adjustable, clevis.
   4. Multiple or Trapeze Hangers: Steel channels with welded spacers and hanger rods.
   5. Wall Support for Pipe Sizes to 3 Inches: Cast iron hook.
   6. Wall Support for Pipe Sizes 4 Inches and Over: Welded steel bracket and wrought steel clamp.
   7. Vertical Support: Steel riser clamp.
   8. Floor Support: Cast iron adjustable pipe saddle, lock nut, nipple, floor flange, and concrete pier or steel support.
   9. Copper Pipe Support: Carbon steel ring, adjustable, copper plated.
   10. Hanger Rods: Mild steel threaded both ends, threaded one end, or continuous threaded.
   11. Inserts: Malleable iron case of galvanized steel shell and expander plug for threaded connection with lateral adjustment, top slot for reinforcing rods, lugs for attaching to forms; size inserts to suit threaded hanger rods.
   12. Rooftop Supports for Low-Slope Roofs: Steel pedestals with bases that rest on top of roofing membrane, not requiring any attachment to the roof structure and not penetrating the roofing assembly, with support fixtures as specified; and as follows:
      a. Bases: High density, UV tolerant, polypropylene or reinforced PVC.
      b. Base Sizes: As required to distribute load sufficiently to prevent indentation of roofing assembly.
      c. Steel Components: Stainless steel, or carbon steel hot-dip galvanized after fabrication in accordance with ASTM A123/A123M.
      d. Attachment/Support Fixtures: As recommended by manufacturer, same type as indicated for equivalent indoor hangers and supports; corrosion resistant material.
      e. Height: Provide minimum clearance of 6 inches under pipe to top of roofing.
      f. Manufacturers:
         1) PHP Systems/Design: www.phpsd.com/#sle.
         2) Portals Plus; Pedestal Plus: www.portalsplus.com/#sle.

2.04 REFRIGERANT

A. Refrigerant: Use only refrigerants that have ozone depletion potential (ODP) of zero and global warming potential (GWP) of less than 50.

2.05 MOISTURE AND LIQUID INDICATORS

A. Indicators: Single port type, UL listed, with copper or brass body, flared or solder ends, sight glass, color coded paper moisture indicator with removable element cartridge and plastic cap; for maximum temperature of 200 degrees F and maximum working pressure of 500 psi.

2.06 VALVES

A. Diaphragm Packless Valves:
   1. UL listed, globe or angle pattern, forged brass body and bonnet, phosphor bronze and stainless steel diaphragms, rising stem and handwheel, stainless steel spring, nylon seat disc, solder or flared ends, with positive backseating; for maximum working pressure of 500 psi and maximum

temperature of 275 degrees F.

B. Packed Angle Valves:
   1. Forged brass or nickel plated forged steel, forged brass seal caps with copper gasket, rising stem and seat with backseating, molded stem packing, solder or flared ends; for maximum working pressure of 500 psi and maximum temperature of 275 degrees F.

C. Ball Valves:
   1. Two piece bolted forged brass body with teflon ball seals and copper tube extensions, brass bonnet and seal cap, chrome plated ball, stem with neoprene ring stem seals; for maximum working pressure of 500 psi and maximum temperature of 300 degrees F.

D. Service Valves:
   1. Forged brass body with copper stubs, brass caps, removable valve core, integral ball check valve, flared or solder ends, for maximum pressure of 500 psi.

2.07 STRAINERS

A. Straight Line or Angle Line Type:
   1. Brass or steel shell, steel cap and flange, and replaceable cartridge, with screen of stainless steel wire or monel reinforced with brass; for maximum working pressure of 430 psi.

2.08 CHECK VALVES

A. Globe Type:
   1. Cast bronze or forged brass body, forged brass cap with neoprene seal, brass guide and disc holder, phosphor-bronze or stainless steel spring, teflon seat disc; for maximum temperature of 300 degrees F and maximum working pressure of 425 psi.

B. Straight Through Type:
   1. Brass body and disc, phosphor-bronze or stainless steel spring, neoprene seat; for maximum working pressure of 500 psi and maximum temperature of 200 degrees F.

2.09 PRESSURE REGULATORS

A. Brass body, stainless steel diaphragm, direct acting, adjustable over 0 to 80 psi range, for maximum working pressure of 450 psi.

2.10 PRESSURE RELIEF VALVES

A. Straight Through or Angle Type: Brass body and disc, neoprene seat, factory sealed and stamped with ASME UV and National Board Certification NB, selected to ASHRAE Std 15, with standard setting of 235 psi.

2.11 FILTER-DRIERS

A. Performance:
   1. Flow Capacity - Liquid Line: Per manufacturer's written instructions, rated in accordance with AHRI 710.
   2. Pressure Drop: 2 psi, maximum, when operating at full connected evaporator capacity.
   3. Design Working Pressure: 350 psi, minimum.

B. Cores: Molded or loose-fill molecular sieve desiccant compatible with refrigerant, activated alumina, activated charcoal, and filtration to 40 microns, with secondary filtration to 20 microns; of construction that will not pass into refrigerant lines.

C. Construction: UL listed.
   1. Connections: As specified for applicable pipe type.

2.12 SOLENOID VALVES

A. Valve: AHRI 760 I-P, pilot operated, copper, brass or steel body and internal parts, synthetic seat, stainless steel stem and plunger assembly (permitting manual operation in case of coil failure), integral strainer, with flared, solder, or threaded ends; for maximum working pressure of 500 psi.

B. Coil Assembly: UL 429 UL listed, replaceable with molded electromagnetic coil, moisture and fungus proof, with surge protector and color coded lead wires, integral junction box with pilot light.

2.13 EXPANSION VALVES

A. Angle or Straight Through Type: AHRI 750; design suitable for refrigerant, brass body, internal or external equalizer, bleed hole, adjustable superheat setting, replaceable inlet strainer, with non-replaceable capillary tube and remote sensing bulb and remote bulb well.

B. Selection: Evaluate refrigerant pressure drop through system to determine available pressure drop across valve. Select valve for maximum load at design operating pressure and minimum 10 degrees F superheat. Select to avoid being undersized at full load and excessively oversized at part load.

2.14 ELECTRONIC EXPANSION VALVES

A. Valve:
   1. Brass body with flared or solder connection, needle valve with floating needle and machined seat, stepper motor drive.

B. Evaporation Control System:
   1. Electronic microprocessor based unit in enclosed case, proportional integral control with adaptive superheat, maximum operating pressure function, preselection allowance for electrical defrost and hot gas bypass.

C. Refrigeration System Control: Electronic microprocessor based unit in enclosed case, with proportional integral control of valve, on/off thermostat, air temperature alarm (high and low), solenoid valve control, liquid injection adaptive superheat control, maximum operating pressure function, night setback thermostat, timer for defrost control.

2.15 RECEIVERS

A. Internal Diameter 6 inch and Smaller:
   1. AHRI 495, UL listed, steel, brazed; 400 psi maximum pressure rating, with tappings for inlet, outlet, and pressure relief valve.

B. Internal Diameter Over 6 inch:
   1. AHRI 495, welded steel, tested and stamped in accordance with ASME BPVC-VIII-1; 400 psi with tappings for liquid inlet and outlet valves, pressure relief valve, and magnetic liquid level indicator.

2.16 FLEXIBLE CONNECTORS

A. Corrugated stainless steel hose with single layer of stainless steel exterior braiding, minimum 9 inches long with copper tube ends; for maximum working pressure of 500 psi.

2.17 ENGINEERED WALL SEALS AND INSULATION PROTECTION

A. Manufacturers:
   1. Airex Manufacturing, Inc: www.airexmfg.com/#sle.

B. Pipe Penetration Wall Seal: Seals HVAC piping wall penetrations with compression gasket wall mounted rigid plastic outlet cover.
   1. Wall Outlet Size, Stucco and Masonry Applications: 7-1/2 inch wide by 10 inch high.
      a. Elastomeric Sleeve Diameter: 1-11/16 inch.
   2. Outlet Cover Color: Gray.
   3. Water Penetration: Comply with ASTM E331.

4. Air Leakage: Comply with ASTM E283.
5. Air Permeance: Comply with ASTM E2178.

C. Insulation Protection System: Mechanical line insulation and PVC cover.
1. PVC Insulation Cover Color: Black with full-length velcro fastener.
2. Weatherization and Ultraviolet Exposure Protection: Comply with ASTM G153.
3. Water/Vapor Permeability: Comply with ASTM E96/E96M.
4. Anti-Fungal and Anti-Microbial Resistance: Comply with ASTM G21.
5. Flame Spread and Smoke Development Rating of 25/450: Comply with ASTM E84.
6. Adhesive free.

PART 3 EXECUTION

3.01 PREPARATION

A. Ream pipe and tube ends. Remove burrs. Bevel plain end ferrous pipe.

B. Remove scale and dirt on inside and outside before assembly.

C. Prepare piping connections to equipment with flanges or unions.

3.02 INSTALLATION

A. Install refrigeration specialties in accordance with manufacturer's instructions.

B. Route piping in orderly manner, with plumbing parallel to building structure, and maintain gradient.

C. Install piping to conserve building space and avoid interference with use of space.

D. Group piping whenever practical at common elevations and locations. Slope piping one percent in direction of oil return.

E. Install piping to allow for expansion and contraction without stressing pipe, joints, or connected equipment.

F. Inserts:
1. Provide inserts for placement in concrete formwork.
2. Provide inserts for suspending hangers from reinforced concrete slabs and sides of reinforced concrete beams.
3. Provide hooked rod to concrete reinforcement section for inserts carrying pipe over 4 inches.
4. Where concrete slabs form finished ceiling, locate inserts flush with slab surface.
5. Where inserts are omitted, drill through concrete slab from below and provide through-bolt with recessed square steel plate and nut above slab.

G. Pipe Hangers and Supports:
1. Install in accordance with ASME B31.5.
2. Support horizontal piping as indicated.
3. Install hangers to provide minimum 1/2 inch space between finished covering and adjacent work.
4. Place hangers within 12 inches of each horizontal elbow.

H. Arrange piping to return oil to compressor. Provide traps and loops in piping, and provide double risers as required. Slope horizontal piping 0.40 percent in direction of flow.

I. Provide clearance for installation of insulation and access to valves and fittings.

J. Provide access to concealed valves and fittings. Coordinate size and location of access doors with Section 08 3100.

K. Flood piping system with nitrogen when brazing.

L. Where pipe support members are welded to structural building frame, brush clean, and apply one coat of zinc rich primer to welding.

M. Prepare unfinished pipe, fittings, supports, and accessories ready for finish painting. See Section 09 9123.

N. Insulate piping and equipment.

O. Follow ASHRAE Std 15 procedures for charging and purging of systems and for disposal of refrigerant.

P. Provide replaceable cartridge filter-driers, with isolation valves and valved bypass.

Q. Locate expansion valve sensing bulb immediately downstream of evaporator on suction line.

R. Provide external equalizer piping on expansion valves with refrigerant distributor connected to evaporator.

S. Install flexible connectors at right angles to axial movement of compressor, parallel to crankshaft.

T. Fully charge completed system with refrigerant after testing.

U. Provide electrical connection to solenoid valves. See Section 26 0583.

3.03 FIELD QUALITY CONTROL

A. See Section 01 4000 - Quality Requirements, for additional requirements.

B. Test refrigeration system in accordance with ASME B31.5.

C. Pressure test system with dry nitrogen to 200 psi. Perform final tests at 27 inches vacuum and 200 psi using halide torch. Test to no leakage.

3.04 SCHEDULES

A. Hanger Spacing for Copper Tubing.
1. 1/2 inch, 5/8 inch, and 7/8 inch OD: Maximum span, 5 feet; minimum rod size, 1/4 inch.
2. 1-1/8 inch OD: Maximum span, 6 feet; minimum rod size, 1/4 inch.
3. 1-3/8 inch OD: Maximum span, 7 feet; minimum rod size, 3/8 inch.
4. 1-5/8 inch OD: Maximum span, 8 feet; minimum rod size, 3/8 inch.
5. 2-1/8 inch OD: Maximum span, 8 feet; minimum rod size, 3/8 inch.
6. 2-5/8 inch OD: Maximum span, 9 feet; minimum rod size, 3/8 inch.
7. 3-1/8 inch OD: Maximum span, 10 feet; minimum rod size, 3/8 inch.
8. 3-5/8 inch OD: Maximum span, 11 feet; minimum rod size, 1/2 inch.
9. 4-1/8 inch OD: Maximum span, 12 feet; minimum rod size, 1/2 inch.

END OF SECTION

SECTION 23 3100
HVAC DUCTS AND CASINGS

PART 1 GENERAL

1.01 SECTION INCLUDES

A. Metal ducts.

B. Flexible ducts.

C. Ducts for kitchen exhaust applications.

D. Stainless steel canopy hoods.

1.02 RELATED REQUIREMENTS

A. Section 07 8400 - Firestopping.

B. Section 09 9113 - Exterior Painting: Weld priming, weather resistant, paint or coating.

C. Section 09 9123 - Interior Painting: Weld priming, paint or coating.

D. Section 11 4000 - Foodservice Equipment: Kitchen range hoods.

E. Section 23 0130.51 - HVAC Air-Distribution System Cleaning: Post install duct cleaning.

F. Section 23 0548 - Vibration and Seismic Controls for HVAC.

G. Section 23 0713 - Duct Insulation: External insulation and duct liner.

H. Section 23 3300 - Air Duct Accessories.

I. Section 23 3319 - Duct Silencers.

J. Section 23 3700 - Air Outlets and Inlets: Fabric air distribution devices.

1.03 REFERENCE STANDARDS

A. ASHRAE (FUND) - ASHRAE Handbook - Fundamentals Most Recent Edition Cited by Referring Code or Reference Standard.

B. ASTM A36/A36M - Standard Specification for Carbon Structural Steel 2019.

C. ASTM A653/A653M - Standard Specification for Steel Sheet, Zinc-Coated (Galvanized) or Zinc-Iron Alloy-Coated (Galvannealed) by the Hot-Dip Process 2020.

D. ASTM A666 - Standard Specification for Annealed or Cold-Worked Austenitic Stainless Steel Sheet, Strip, Plate, and Flat Bar 2015.

E. ASTM A1008/A1008M - Standard Specification for Steel, Sheet, Cold-Rolled, Carbon, Structural, High-Strength Low-Alloy, High-Strength Low-Alloy with Improved Formability, Required Hardness, Solution Hardened, and Bake Hardenable 2021a.

F. ASTM A1011/A1011M - Standard Specification for Steel, Sheet and Strip, Hot-Rolled, Carbon, Structural, High-Strength Low-Alloy, High-Strength Low-Alloy with Improved Formability, and Ultra-High Strength 2018a.

G. ASTM C177 - Standard Test Method for Steady-State Heat Flux Measurements and Thermal Transmission Properties by Means of the Guarded-Hot-Plate Apparatus 2019.

H. ASTM E84 - Standard Test Method for Surface Burning Characteristics of Building Materials 2022.

I. ICC (IMC) - International Mechanical Code Most Recent Edition Adopted by Authority Having Jurisdiction, Including All Applicable Amendments and Supplements.

J. ICC-ES AC01 - Acceptance Criteria for Expansion Anchors in Masonry Elements 2015.

K. ICC-ES AC106 - Acceptance Criteria for Predrilled Fasteners (Screw Anchors) in Masonry Elements 2015.

L. ICC-ES AC193 - Acceptance Criteria for Mechanical Anchors in Concrete Elements 2015.

M. ICC-ES AC308 - Acceptance Criteria for Post-Installed Adhesive Anchors in Concrete Elements 2016.

N. NFPA 90A - Standard for the Installation of Air-Conditioning and Ventilating Systems 2021.

O. NFPA 90B - Standard for the Installation of Warm Air Heating and Air-Conditioning Systems 2021.

P. NFPA 96 - Standard for Ventilation Control and Fire Protection of Commercial Cooking Operations 2021.

Q. SMACNA (DCS) - HVAC Duct Construction Standards Metal and Flexible 2021.

R. SMACNA (KVS) - Kitchen Ventilation Systems and Food Service Equipment Fabrication and Installation Guidelines 2001.

S. UL 181 - Standard for Factory-Made Air Ducts and Air Connectors current edition, including all revisions.

T. UL 1978 - Grease Ducts Current Edition, Including All Revisions.

U. UL 2221 - Tests of Fire Resistive Grease Duct Enclosure Assemblies Current Edition, Including All Revisions.

1.04 SUBMITTALS

A. See Section 01 3000 - Administrative Requirements for submittal procedures.

B. Product Data: Provide data for duct materials, duct liner, duct connections, and seismic restraint devices.

C. Shop Drawings: CAD or Revit generated and drawn at minimum 1/4" = 1'-0" scale. Shop drawings shall include the following:
   1. Fabrication, assembly, and installation including plans, elevations, sections, components, and attachments to other work.
   2. Duct layout indicating sizes and pressure classes.
   3. Elevations of top and bottom of ducts.
   4. Dimensions of main duct runs from building grid lines.
   5. Fittings.
   6. Reinforcement and spacing.
   7. Seam and joint construction.
   8. Penetrations through fire-rated and other partitions.
   9. Duct accessories, including access doors and panels.
   10. Hangers and supports, including methods for duct and building attachment, vibration isolation, and seismic restraints.

D. Coordination Drawings: CAD or Revit generated and drawn to scale. Coordination drawings shall include the following:
   1. Items penetrating finished ceiling including, but not limited to, the following:
      a. Lighting fixtures.
      b. Air outlets and inlets.
      c. Speakers.
      d. Sprinklers.
      e. Access panels.
      f. Perimeter and other architectural moldings.
   2. Duct installation in congested spaces, indicating coordination with general construction building components, and other building services. Indicate any proposed changes to duct layout if required.

E. Welding certificates.

F. Leak testing documentation.

G. Grease duct light test documentation.

1.05 QUALITY ASSURANCE

A. Welding Qualification: Qualify procedures and personnel according to the following:
   1. AWS D1.1/D1.1M, "Structural Welding Code - Steel," for hangers and supports.
   2. AWS D1.2/D1.2M, "Structural Welding Code - Aluminum," For aluminum supports.
   3. AWS D9.1/D9.1M, "Sheet Metal Welding Code," for duct joint and seam welding.

1.06 DELIVERY, STORAGE, AND HANDLING

A. Store all ductwork and associated ductwork components to prevent damage and to prevent entrance of dirt, debris, and moisture.

B. Support all ductwork and associated ductwork components to prevent sagging or bending.

C. Provide temporary storage, delivery and handling in accordance with the SMACNA Duct Cleanliness Standard level.

1.07 FIELD CONDITIONS

A. Do not install duct sealants when temperatures are less than those recommended by sealant manufacturers.

B. Maintain temperatures within acceptable range during and after installation of duct sealants.

PART 2 PRODUCTS

2.01 GENERAL REQUIREMENTS

A. Provide UL Class 1 ductwork, fittings, hangers, supports, and appurtenances in accordance with NFPA 90A and SMACNA (DCS) guidelines unless stated otherwise.

B. Provide metal duct unless otherwise indicated. Fibrous glass duct can be substituted at the Contractor's option.

C. Acoustical Treatment: Provide sound-absorbing liners and sectional silencers for metal-based ducts in compliance with Section 23 3319.

D. Seismic Restraint: Fabricate in compliance with ICC (IMC) requirements; see Section 23 0548.

E. Duct Fabrication Requirements:
   1. Duct and Fitting Fabrication and Support: SMACNA (DCS) including specifics for continuously welded round and oval duct fittings.
   2. No variation of duct configuration or size permitted except by written permission. Size round duct installed in place of rectangular ducts in accordance with ASHRAE (FUND) Handbook - Fundamentals.
   3. Use reinforced and sealed sheet-metal materials at recommended gauges for indicated operating pressures or pressure class.
   4. Construct tee's, bends, and elbows with radius of not less than 1-1/2 times width of duct on centerline. Where not possible and where rectangular elbows must be used, provide air foil turning vanes of perforated metal with glass fiber insulation.
   5. Provide turning vanes of perforated metal with glass fiber insulation when acoustical lining is indicated.
   6. Increase duct sizes gradually, not exceeding 15 degrees divergence wherever possible; maximum 30 degrees divergence upstream of equipment and 45 degrees convergence downstream.
   7. Where ducts are connected to exterior wall louvers and duct outlet is smaller than louver frame, provide blank-out panels sealing louver area around duct. Use same material as duct, painted black on exterior side; seal to louver frame and duct.

2.02 METAL DUCTS

A. Material Requirements:
1. Galvanized Steel: Hot-dipped galvanized steel sheet, ASTM A653/A653M FS Type B, with G60/Z180 coating.
2. Carbon Steel: ASTM A1008/A1008M Designation CS (commercial steel), cold-rolled.
3. Stainless Steel: ASTM A666, Type 304.

B. Rectangular Metal Duct:
1. Rectangular Single Wall:
a. Fabricate rectangular ducts in lengths appropriate to reinforcement and rigidity class required for pressure class.
b. Duct systems shall not exceed deflection limits according to SMACNA's HVAC Duct Construction Standards.
c. Minimum sheet metal gage shall be
d. Utilize radius elbows with centerline radius equal to 1.5 times the width unless specifically shown otherwise on the drawings.
e. Square throat elbows where specificially shown on the drawings shall include turning vanes for all applications except grease hood ducts.
2. Rectangular Double Wall Insulated: Rectangular spiral lock seam duct with galvanized steel outer wall, perforated galvanized steel inner wall; fitting with the solid inner wall.
a. Insulation:
1) Thickness: 1 inch.
2) Material: Fiberglass.

C. Flat-Oval Metal Ducts:
1. Flat-Oval Single Wall Duct: Machine made from a round spiral lock seam duct.
a. Fittings: Manufacture at least two gauges heavier metal than the duct.
b. Provide duct material, gauges, reinforcing, and sealing for operating pressures indicated.
2. Flat-Oval Double Wall Insulated Duct: Machine made from round spiral lock seam duct.
a. Fittings: Manufacture with solid inner wall.
b. Inner Wall: Perforated galvanized steel.
c. Insulation:
1) Thickness: 1 inch fiberglass.

D. Round Metal Ducts:
1. Round Single Wall Duct: Round lock seam duct with galvanized steel outer wall.
2. Round Double Wall Insulated Duct: Round spiral lock seam duct with galvanized steel outer wall, perforated galvanized steel inner wall; fitting with the solid inner wall.
a. Insulation:
1) Thickness: 1 inch.
3. Round Connection System: Interlocking duct connection system per SMACNA (DCS).

E. Round Spiral Duct:
1. Round spiral lock seam duct with galvanized steel outer wall.

F. Connectors, Fittings, Sealants, and Miscellaneous:
1. Fittings: Manufacture with solid inner wall of perforated galvanized steel.
2. Transverse Duct Connection System: SMACNA "E" rated rigid class connection, interlocking angle and duct edge connection system with sealant, gasket, cleats, and corner clips in accordance with SMACNA (DCS).
3. Joint Sealers and Sealants: Non-hardening, water resistant, mildew and mold resistant.

a. Type: Heavy mastic or liquid used alone or with tape, suitable for joint configuration and compatible with substrates, and recommended by manufacturer for pressure class of ducts.
b. VOC Content: Not more than 250 g/L, excluding water.
c. Surface Burning Characteristics: Flame spread index of zero and smoke developed index of zero, when tested in accordance with ASTM E84.

4. Gasket Tape:
   a. Provide butyl rubber gasket tape for a flexible seal between transfer duct connector (TDC), transverse duct flange (TDF), applied flange connections, and angle ring connections.
5. Hanger Rod: ASTM A36/A36M; steel, galvanized; threaded both ends, threaded one end, or continuously threaded.
6. Hanger Fasteners: Attach hangers to structure using appropriate fasteners as follows:
   a. Concrete Wedge Expansion Anchors: Complying with ICC-ES AC193.
   b. Masonry Wedge Expansion Anchors: Complying with ICC-ES AC01.
   c. Concrete Screw Type Anchors: Complying with ICC-ES AC193.
   d. Masonry Screw Type Anchors: Complying with ICC-ES AC106.
   e. Concrete Adhesive Type Anchors: Complying with ICC-ES AC308.
   f. Other Types: As required.

2.03 FLEXIBLE DUCTS

A. Acoustic Flexible Air Ducts:
1. UL 181, Class 1, aluminum laminate and polyester film with latex adhesive supported by helically wound spring steel wire.
2. Insulation: Fiberglass insulation with flame-retardant vapor barrier, minimum R-6.
3. Inner Core: Spun-bonded, nonwoven inner core.
4. Pressure Rating: From 6 in-wc to 5 in-wc negative.
5. Maximum Velocity: 4,000 fpm.
6. Temperature Range: Minus 20 to 250 degrees F.

2.04 GENERAL CASING REQUIREMENTS

A. Fabricate in accordance with SMACNA (DCS) for indicated operating pressures indicated.

B. Minimum Fabrication Requirements:
1. Fabricate acoustic plenum or casing with reinforcing turned inward.
2. Provide 16 gauge, 0.059 inch sheet steel back facing and 22 gauge, 0.029 inch perforated sheet steel front facing with 3/32 inch diameter holes on 5/32 inch centers.
3. Construct panels 3 inches thick packed with 4.5 pcf minimum glass fiber insulation media, on inverted channels of 16 gauge, 0.059 inch sheet steel.
4. Mount floor mounted plenum or casings on 4 inch high concrete curbs. At floor, rivet panels on 8 inch centers to angles. Where floors are acoustically insulated, provide liner of galvanized 18 gauge, 0.052 inch expanded metal mesh supported at 12 inch centers, turned up 12 inches at sides with sheet metal shields.

C. Access Doors:
1. Install hinged access doors where indicated or required for access to equipment for cleaning and inspection.
2. Reinforce door frames with steel angles tied to horizontal and vertical plenum supporting angles.
3. Provide clear wire glass observation ports, minimum 6 by 6 inch size.

D. Thermal Panels:
1. Material: Steel-faced composite panel with noncombustible structural high density mineral fiber core for plenum fabrication.
   a. Facing: Galvanized steel (G90), 24 gauge, 0.0275 inch.

b. Finish: Unpainted.
c. Core: Mineral wool board.
d. Structural: Nonload bearing.

2. Panel Thickness: 2.5 inches.
3. R-Value: 12 when tested in accordance with ASTM C177.

2.05 DUCTS FOR KITCHEN EXHAUST APPLICATIONS

A. Provide ductwork, fittings, and appurtenances per NFPA 96, SMACNA (KVS), UL 1978, and UL 2221 requirements and guidelines.

B. Class 1 duct for air with gas and grease particle exhaust at an air velocity of 1,500 to 2,500 fpm.

C. Where ducts are not self-draining back to equipment, provide low point drain pocket with the copper drain pipe to a sanitary sewer.

D. Designed, fabricated, and installed to be liquid tight preventing exhaust leakage into the building.

E. Kitchen Hood and Grease Exhaust Duct:
1. Fabricate in accordance with ductwork manufacturer's instructions, SMACNA (DCS), SMACNA (KVS), and NFPA 96.

F. Cooking Hood and Grease Exhaust Duct:
1. Duct Size: 6 in-wc pressure class, stainless steel. Carbon steel allowed only if concealed.
2. Liquid-tight with continuous external weld for seams and joints.
3. Slope ductwork 1/4" per foot back to the grease hood. Do not create any low spots in ductwork.
4. Provide 6" minimum to 12" maximum clearance from rated shaft walls.
5. Provide 18" clearance to combustible materials and 4" clearance to limited combustible materials.
6. Support duct such that hangers and attachments can support weight of duct plus 800 pounds at any point.
7. Provide ductwork inspection by a certified company acceptable to the authority having jurisdiction.
8. Coordinate with all trades such that a minimum of 4" clearance is provided between ductwork and limted combustible materials such as gypboard, fiberglass insulation, etc.
9. Tested and UL listed for use with commercial cooking equipment in accordance with NFPA 96.
10. Certified for zero clearance to combustible material per UL 2221 with a 2 hour rating.
11. Access Doors:
    a. Provide for duct cleaning inside the horizontal duct at drain pockets, every 12 feet, every floor, and each change of direction.
    b. Use the same material and thickness as duct with gaskets and sealants rated 1,500 degrees F for grease-tight construction.
    c. Mount access doors a minimum of 2" from bottom of duct.
    d. Fasteners for access doors shall not penetrate ductwork.
12. Fume Hood Exhaust: 4 inch w.g. pressure class, stainless steel.
    a. Type 316, stainless-steel sheet with No. 3 finish.
    b. Weld all seams and joints.

PART 3 EXECUTION

3.01 INSTALLATION

1. Install, support, and seal ducts in accordance with SMACNA (DCS).
2. Install products following the manufacturer's instructions.
3. During construction, provide temporary closures of metal or taped polyethylene on open ductwork to prevent construction dust from entering the ductwork system.

4. Increase duct sizes gradually, not exceeding 15 degrees divergence wherever possible; maximum 30 degrees divergence upstream of equipment and 45 degrees convergence downstream.
5. Kitchen Range Hoods: Install when provided by Section 11 4000 then fit-out with respective ductwork and accessories to interconnect exhaust system.
6. Kitchen Hood Exhaust: Provide residue traps at the base of vertical risers with provisions for the cleanout.
7. Duct sizes indicated are inside precise dimensions. For lined ducts, maintain sizes inside lining.
8. Provide openings in ductwork as indicated to accommodate thermometers and controllers. Provide pilot tube openings as indicated for testing of systems, complete with metal can with spring device or screw to insure against air leakage. For openings, insulate ductwork and install insulation material inside a metal ring.
9. Locate ducts with sufficient space around equipment to allow normal operating and maintenance activities.
10. Use crimp joints with or without bead for joining round duct sizes 8 inch and smaller with a crimp in the direction of airflow.
11. Use double nuts and lock washers on threaded rod supports.
12. Connect terminal units to supply ducts directly or with one foot maximum length of flexible duct. Do not use a flexible duct to change direction.
13. Connect diffusers or light troffer boots to low-pressure ducts directly or with 5 feet maximum length of flexible duct held in place with strap or clamp.
14. Set plenum doors at 6 to 12 inches above the floor. Arrange door swings so that fan static-pressure holds the door in a closed position.
15. At exterior wall louvers, seal duct to louver frame and install blank-out panels.
16. Louver Fit-out:
    1) Provide blank-out panels sealing available area of wall-mounted exterior-faced louver when connected ductwork is smaller than actual louver free area, and duct outlet is smaller than the louver frame.
    2) Use the same duct material painted black on the exterior side, then seal louver frame and duct.
17. Plenums and Casings:
    1) Mount floor-mounted casings on 4 inch high concrete curbs.
    2) At floor, rivet panels on 8 inch centers to angles.
    3) Where floors are acoustically insulated, provide liner of galvanized 18 gauge, 0.052 inch expanded metal mesh supported at 12 inch centers, turned up 12 inches at sides with sheet metal shields.
18. Fire Partitions: Provide firestopping sealing as indicated within Section 07 8400.
19. Duct Accessories, Terminal Units, Inlets, and Outlets: Interconnect as indicated in Sections 23 3300, 23 3600, and 23 3700.
20. Duct Insulation: Provide duct insulation in compliance with Section 23 0713.
21. Painting: Provide surface finish as indicated on drawings and Sections 09 9113 and 09 9123.

3.02 APPLICATION

A. Static Pressure Classes: Unless otherwise indicated, construct ducts according to the following:
1. Supply Ducts before Air Terminal Units: 4 inch w.g. pressure class.
2. Supply Ducts after Air Terminal Units: 1 inch w.g. pressure class.
3. Supply Ducts in Mechanical Equipment Rooms, inside shafts, and across ceilings where duct is not serving that floor and going into another shaft: 6 inch w.g. pressure class.
4. Return and Outside Air Ducts in Mechanical Equipment Rooms, inside shafts, and across ceilings where duct is not serving that floor and going into another shaft (Negative Pressure): 4 inch w.g. pressure class.

5. Return Ducts above ceilings: 2 inch w.g. pressure class.
6. General Exhaust Ducts (Negative Pressure): 4 inch w.g. pressure class.
7. Relief Ducts (Positive Pressure): 4 inch w.g. pressure class.
8. Isolation Room Exhaust Ducts (Negative Pressure): 6 inch w.g. pressure class.

3.03 CLOTHES DRYER EXHAUST DUCTS, SPECIAL INSTALLATION REQUIREMENTS

A. Ducts shall not be connected or installed with sheet metal screws or other fasteners that will obstruct the exhaust flow.

B. Male ends of ducts at overlapped duct joints shall extend in the direction of airflow.

C. Clothes dryer transition ducts used to connect the appliance to the exhaust duct system shall be limited to single lengths not-to-exceed 8 feet in length and shall be listed and labeled for the application.

D. Cable hangers may only be used on low pressure (2 inch w.g. construction and lower) round spiral ductwork which is not insulated and has a diameter of 10 inches or less. Utilize the double lock method such that the lower loop is cinched tight to the ductwork and the cable is vertical. Utilize manufacturer's top attached device.

E. Each vertical riser shall be provided with a cleanout or other means for cleaning the interior of the duct.

3.04 PAINTING

A. Paint interior of metal ducts that are visible through registers and grilles and that do not have duct liner. Apply on coat of flat, black, latex paint over a compatible galvanized steel primer. Paint materials and application requirements are specified in Division 9.

3.05 FIELD QUALITY CONTROL

A. Perform the following field tests and inspections according to SMACNA's "HVAC Air Duct Leakage Test Manual" and prepare test reports:
   1. Disassemble, reassemble, and seal segments of systems to accommodate leakage testing and for compliance with test requirements.
   2. Conduct tests at static pressures equal to maximum design pressure of system or section being tested. If pressure classes are not indicated, test entire system at maximum system design pressure. Do no pressurize systems above maximum design operating pressure. Give seven days' advance notice for testing.
   3. All supply ductwork from fan or AHU outlet to the inlet of every terminal uni or reheat coil shall be tested. The terminal unit and all ductwork downstream shall not be tested. All return and exhaust ductwork shall be tested from fan to the end of the branch for every grille. Do not test flexible ductwork.
   4. Maximum Allowable Leakage:
      a. In accordance with the following total leakage quantity limitations, proved a leakage per square foot of ductwork for each fan or AHU to meet the following requirements:
         1) Allowable Leakage, Supply Duct: 1.0 percent of total scheduled fan design airflow.
         2) Allowable Leakage, Return, Outside Air, and Relief Air Duct: 5.0 percent of total scheduled fan design airflow.
         3) Allowable Leakage, General Exhaust Duct: 5.0 percent of total scheduled fan design airflow.
         4) Allowable Leakage, Laboratory Exhaust Duct: 2.0 percent of total scheduled fan design airflow.
         5) Allowable Leakage, Welded Duct: No measurable leakage.
         6) Contractor shall identify fan or AHU total scheduled fan airflow, surface area of ductwork to be tested, total duct surface area of the fan or AHU system and location of ductwork prior to testing. All testing shall be witnessed, documented, and submitted. Document individual test sections, test pressure, orifice size, pressure drop across

orifice, surface area of ductwork to be tested and tested leakage for each section tested. Summarize total leakage by fan or AHU system. Submit field test reports.

7) Submit field test reports. Do no proceed with insulating ductwork until test report demonstrating acceptable leakage has been submitted and process by the Architect.

3.06 CLEANING

A. Visually inspect duct system to ensure that no visible contaminates are present.

B. Test sections of metal duct system, chosen randomly by Owner, for cleanliness according to "Vacuum Test" in NADCA ACR, "Assessment, Cleaning, and Restoration of HVAC Systems."

1. Acceptable Cleanliness Level: Net weight of debris collected on the filter media shall not exceed 0.75 mg/100 sq. cm.

C. Clean thoroughly each duct system as indicated within Section 23 0130.51.

END OF SECTION

SECTION 23 3300
AIR DUCT ACCESSORIES

PART 1 GENERAL

1.01 SECTION INCLUDES

A. Backdraft dampers - metal.

B. Combination fire and smoke dampers.

C. Duct access doors.

D. Duct test holes.

E. Fire dampers.

F. Flexible duct connectors.

G. Volume control dampers.

1.02 RELATED REQUIREMENTS

A. Section 07 8400 - Firestopping.

B. Section 23 0548 - Vibration and Seismic Controls for HVAC.

C. Section 23 3100 - HVAC Ducts and Casings.

D. Section 23 3600 - Air Terminal Units: Pressure regulating damper assemblies.

E. Section 26 0583 - Wiring Connections: Electrical characteristics and wiring connections.

1.03 REFERENCE STANDARDS

A. NFPA 90A - Standard for the Installation of Air-Conditioning and Ventilating Systems 2021.

B. SMACNA (DCS) - HVAC Duct Construction Standards Metal and Flexible 2021.

C. UL 33 - Safety Heat Responsive Links for Fire-Protection Service Current Edition, Including All Revisions.

D. UL 555 - Standard for Fire Dampers Current Edition, Including All Revisions.

E. UL 555C - Standard for Safety Ceiling Dampers Current Edition, Including All Revisions.

F. UL 555S - Standard for Smoke Dampers Current Edition, Including All Revisions.

1.04 SUBMITTALS

A. Product Data: Provide for shop fabricated assemblies including volume control dampers and duct access doors. Include electrical characteristics and connection requirements.

B. Shop Drawings: Indicate for shop fabricated assemblies including volume control dampers and duct access doors.

C. Manufacturer's Installation Instructions: Provide instructions for fire dampers and combination fire and smoke dampers.

D. Project Record Drawings: Record actual locations of access doors and test holes. Provide record drawings of all fire, fire/smoke, and smoke dampers including name of damper and location on plan drawings.

E. Final Test & Inspection Report: Provide Final Test & Inspection Report of all fire, fire/smoke, and smoke dampers.

F. Maintenance Materials: Furnish the following for Owner's use in maintenance of project.
   1. Extra Fusible Links: One of each type and size.

1.05 QUALITY ASSURANCE

A. Manufacturer Qualifications: Company specializing in manufacturing the type of products specified in this section, with minimum three years of documented experience.

B. Products Requiring Electrical Connection: Listed and classified by Underwriters Laboratories Inc. as suitable for the purpose specified and indicated.

1.06 DELIVERY, STORAGE, AND HANDLING

A. Protect dampers from damage to operating linkages and blades.

PART 2 PRODUCTS

2.01 BACKDRAFT DAMPERS - METAL

A. Manufacturers:
   1. Louvers & Dampers, Inc, a brand of Mestek, Inc: www.louvers-dampers.com/#sle.
   2. Greenheck.
   3. Nailor Industries, Inc: www.nailor.com/#sle.
   4. Ruskin Company, a brand of Johnson Controls: www.ruskin.com/#sle.

B. Gravity Backdraft Dampers, Size 18 by 18 inches or Smaller, Furnished with Air Moving Equipment: Air moving equipment manufacturer's standard construction.

C. Multi-Blade, Parallel Action Gravity Balanced Backdraft Dampers: Galvanized steel, with center pivoted blades of maximum 6 inch width, with felt or flexible vinyl sealed edges, linked together in rattle-free manner with 90 degree stop, steel ball bearings, and plated steel pivot pin; adjustment device to permit setting for varying differential static pressure.

2.02 COMBINATION FIRE AND SMOKE DAMPERS

A. Manufacturers:
   1. Lloyd Industries, Inc.: www.firedamper.com.
   2. Louvers & Dampers, Inc: www.louvers-dampers.com.
   3. Greenheck.
   4. Nailor Industries Inc: www.nailor.com.
   5. Ruskin Company: www.ruskin.com.

B. Fabricate in accordance with NFPA 90A, UL 555, UL 555S, and as indicated.

C. Provide factory sleeve and collar for each damper.

D. Smoke Detector: By fire alarm provider.

E. Multiple Blade Dampers: Fabricate with 16 gauge, 0.0598 inch galvanized steel frame and blades, oil-impregnated bronze or stainless steel sleeve bearings and plated steel axles, stainless steel jamb seals, 1/8 by 1/2 inch plated steel concealed linkage, stainless steel closure spring, blade stops, and lock, and 1/2 inch actuator shaft.

F. Normally Closed Smoke Responsive Fire Dampers: Curtain type, opening by gravity upon actuation of electro thermal link, flexible stainless steel blade edge seals to provide constant sealing pressure.

G. Electro Thermal Link: Fusible link melting at 165 degrees F; 120 volts, single phase, 60 Hz; UL listed and labeled.

H. Leakage: Class I.

I. Rated pressure and velocity to exceed design airflow condition, minimm 2000 fpm and 4 inch w.g.

J. Damper Motors: Two-position action.

K. Motors: Comply with specification 23 0513 Common Motor Requirements for HVAC Equipment.

L. Electrical: 115V, single phase, 60 Hz.

M. Electrical Disconnect: Provide toggle switch non-fused disconnect mounted to damper frame.

N. Accessories:
1. Auxiliary switches for position indication.
2. Momentary test switch, damper or remote mounted.

2.03 DUCT ACCESS DOORS

A. Manufacturers:
1. Lloyd Industries, Inc.: www.firedamper.com.
2. Greenheck.
3. Nailor Industries Inc: www.nailor.com.
4. Ruskin Company: www.ruskin.com.
5. SEMCO Incorporated: www.semcohvac.com.
6. Ward Industries: www.wardind.com.

B. Fabricate in accordance with SMACNA (DCS) and as indicated.
1. Door:
a. Double wall, rectangular.
b. Galvanized sheet metal with insulation fill and thickness as indicated for duct pressure class.
c. Hinges and Latches: Piano hinge and cam latches with safethy chain.
d. Fabricate doors airtight and suitable for duct pressure class.
e. Access doors for ductwork class 4 inch or greater shall be sandwich construction duct mounting (not bent over tabs and foam gasketing).
f. Vision panel.
2. Frame: Galvanized sheet steel, with bend=over tabs and foam gaskets.
3. Number of Hinges and Locks:
a. Access Doors Less Than 12 Inches Square: No hinges and two sash locks.
b. Access Doors up to 18 Inches Square: Two hinges and two sash locks.
c. Access Doors up to 24 by 48 Inches: Three hinges and two compression latches.
d. Access Doors Larger Than 24 by 48 Inches: Four hinges and two compression latches with outside and inside handles.

C. Pressure Relief Access Door:
1. Fame Material: Extruded aluminum.
2. Door: Double wall; galvanized steel (G60) with insulation fill with metal thickness applicable for duct pressure class.
3. Operation: Open outward for positive pressure ducts and inward for negative pressure ducts.
4. Factory set at duct pressure class if not indicated otherwise.
5. Doors close when pressures are within setpoint range.
6. Cable assembly with spring.
7. Latches: Adjustable magnet assembly.
8. Seal: Co-extruded PVC leaf gasket.
9. Insulation Fill: 1 inch thick, fibrous glass or polystyrene foam board.
10. Similar to Greenheck PRAD and VRAD.

D. Access doors with sheet metal screw fasteners are not acceptable.

2.04 DUCT TEST HOLES

A. Temporary Test Holes: Cut or drill in ducts as required. Cap with neat patches, neoprene plugs, threaded plugs, or threaded or twist-on metal caps.

B. Permanent Test Holes: Factory fabricated, air tight flanged fittings with screw cap. Provide extended neck fittings to clear insulation.

2.05 FIRE DAMPERS

A. Manufacturers:
1. Lloyd Industries, Inc.: www.firedamper.com.
2. Louvers & Dampers, Inc: www.louvers-dampers.com.
3. Greenheck.
4. Nailor Industries Inc: www.nailor.com.
5. Ruskin Company: www.ruskin.com.
6. Ward Industries: www.wardind.com.

B. Fabricate in accordance with NFPA 90A and UL 555, and as indicated.

C. Closure Type: Dynamic.

D. Closure rating in ducts up to 4 inch w.g. static pressure class and minimum 2000 fpm velocity.

E. Fire Rating: 1-1/2 hours and 3 hours.

F. Ceiling (Radiation) Dampers: Galvanized steel, 22 gauge, 0.0299 inch frame and 16 gauge, 0.0598 inch flap, two layers 0.125 inch ceramic fiber on top side and one layer on bottom side for round flaps, with locking clip.
1. Rated for three hour service in compliance with UL 555C.

G. Horizontal Dampers: Galvanized steel, 22 gauge, 0.0299 inch frame, stainless steel closure spring, and lightweight, heat retardant non-asbestos fabric blanket.

H. Curtain Type Dampers: Galvanized steel with interlocking blades. Provide stainless steel closure springs and latches for horizontal installations. Configure with blades out of air stream except for 1.0 inch pressure class ducts up to 12 inches in height.

I. Multiple Blade Dampers: 16 gauge, 0.0598 inch galvanized steel frame and blades, oil-impregnated bronze or stainless steel sleeve bearings and plated steel axles, 1/8 by 1/2 inch plated steel concealed linkage, stainless steel closure spring, blade stops, and lock.

J. Fusible Links: UL 33, separate at 165 degrees F with adjustable link straps for combination fire/balancing dampers.

2.06 FLEXIBLE DUCT CONNECTORS

A. Manufacturers:
1. Ductmate Industries, Inc.
2. Duro Dyne Inc.
3. Ventfabrics, Inc.

B. Fabricate in accordance with SMACNA (DCS) and as indicated.

C. Flexible Duct Connections: Fabric crimped into metal edging strip.
1. Fabric: UL listed fire-retardant neoprene coated woven glass fiber fabric to NFPA 90A, minimum density 30 oz/sq yd.
a. Net Fabric Width: Approximately 2 inches wide.
2. Metal: 3 inches wide, 24 gauge, 0.0239 inch thick galvanized steel.

2.07 VOLUME CONTROL DAMPERS

A. Manufacturers:
1. Louvers & Dampers, Inc: www.louvers-dampers.com.
2. Greenheck.
3. Nailor Industries Inc: www.nailor.com.

4. Ruskin Company: www.ruskin.com.

B. Single Blade Dampers:
   1. Fabricate for duct sizes up to 6 by 30 inch.
   2. Blade: 24 gauge, 0.0239 inch, minimum.

C. Multi-Blade Damper: Fabricate of opposed blade pattern with maximum blade sizes 8 by 72 inch. Assemble center and edge crimped blades in prime coated or galvanized channel frame with suitable hardware.
   1. Blade: 18 gauge, 0.0478 inch, minimum.

D. End Bearings: Except in round ducts 12 inches and smaller, provide end bearings. On multiple blade dampers, provide oil-impregnated nylon, thermoplastic elastomer, or sintered bronze bearings.

E. Quadrants:
   1. Provide locking, indicating quadrant regulators on single and multi-blade dampers.
   2. On insulated ducts mount quadrant regulators on stand-off mounting brackets, bases, or adapters.
   3. Where rod lengths exceed 30 inches provide regulator at both ends.

PART 3 EXECUTION

3.01 PREPARATION

A. Verify that electric power is available and of the correct characteristics.

3.02 INSTALLATION

A. Install accessories in accordance with manufacturer's instructions, NFPA 90A, and follow SMACNA (DCS). See Section 23 3100 for duct construction and pressure class.

B. Provide backdraft dampers on exhaust fans or exhaust ducts nearest to outside and where indicated.

C. Provide duct test holes where indicated and required for testing and balancing purposes.

D. Provide fire dampers, combination fire and smoke dampers, and smoke dampers at locations indicated, where ducts and outlets pass through fire rated components, and where required by Authorities Having Jurisdiction. Install with required perimeter mounting angles, sleeves, breakaway duct connections, corrosion resistant springs, bearings, bushings and hinges.

E. Install smoke dampers and combination smoke and fire dampers in accordance with NFPA 92.

F. Demonstrate re-setting of fire dampers to Owner's representative.

G. Perform Operational Damper Testing on all fire, fire/smoke, and smoke dampers. Submit Final Test & Inspection Report to Owner. Report shall indicate pass/fail, damper number, damper description, date tested, testing technician's name, photos, and list of deficiencies.

H. At fans and motorized equipment associated with ducts, provide flexible duct connections immediately adjacent to the equipment.

I. At equipment supported by vibration isolators, provide flexible duct connections immediately adjacent to the equipment.
   1. See Section 23 0548.

J. For fans developing static pressures of 5.0 inches and over, cover flexible connections with leaded vinyl sheet, held in place with metal straps.

K. Provide balancing dampers at points on supply, return, and exhaust systems where branches are taken from larger ducts as required for air balancing.

L. Provide balancing dampers on duct take-off to diffusers, grilles, and registers.

M. Install access doors with swing against duct pressure.

N. Install duct security bars. Provide access door on secure side of security bars.

3.03 FIELD QUALITY CONTROL

A. Tests and Inspections:
1. Operate dampers to verify full range of movement.
2. Inspect locations of access doors and verify that purpose of access door can be performed.
3. Operate fire, smoke, and combination fire and smoke dampers to verify full range of movement and verify that proper heat response device is installed.
4. Inspect turning vanes for proper and secure installation.
5. Operate remote damper operators to verify full range of movement of operator and damper.
6. Adjust pressure relief doors for relief setting.

END OF SECTION

SECTION 23 3423
HVAC POWER VENTILATORS

PART 1 GENERAL

1.01 SECTION INCLUDES

A. Roof exhausters.

B. Wall exhausters.

C. Inline centrifugal fans and blowers.

D. Kitchen hood upblast roof exhausters.

1.02 RELATED REQUIREMENTS

A. Section 23 0513 - Common Motor Requirements for HVAC Equipment.

B. Section 23 0548 - Vibration and Seismic Controls for HVAC.

C. Section 23 3300 - Air Duct Accessories: Backdraft dampers.

D. Section 26 0583 - Wiring Connections: Electrical characteristics and wiring connections.

1.03 REFERENCE STANDARDS

A. AMCA (DIR) - (Directory of) Products Licensed Under AMCA International Certified Ratings Program 2015.

B. AMCA 99 - Standards Handbook 2016.

C. AMCA 204 - Balance Quality and Vibration Levels for Fans 2020.

D. AMCA 210 - Laboratory Methods of Testing Fans for Certified Aerodynamic Performance Rating 2016.

E. AMCA 300 - Reverberant Room Method for Sound Testing of Fans 2014.

F. AMCA 301 - Methods for Calculating Fan Sound Ratings from Laboratory Test Data 2014.

G. NEMA 250 - Enclosures for Electrical Equipment (1000 Volts Maximum) 2020.

H. NFPA 96 - Standard for Ventilation Control and Fire Protection of Commercial Cooking Operations 2021.

I. UL 705 - Power Ventilators Current Edition, Including All Revisions.

J. UL 762 - Outline of Investigation for Power Roof Ventilators for Restaurant Exhaust Appliances Current Edition, Including All Revisions.

1.04 SUBMITTALS

A. See Section 01 3000 - Administrative Requirements for submittal procedures.

B. Product Data: Provide data on fans and accessories, including fan curves with specified operating point plotted, power, rpm, sound power levels at rated capacity, and electrical characteristics and connection requirements.

C. Maintenance Data: Include instructions for lubrication, motor and drive replacement, spare parts list, and wiring diagrams.

1.05 FIELD CONDITIONS

A. Request Owner permission to use permanent ventilator(s) for ventilation during construction.

PART 2 PRODUCTS

2.01 MANUFACTURERS

A. Carnes, a division of Carnes Company Inc: www.carnes.com/#sle.

B. Greenheck: www.greenheck.com.

C. Loren Cook Company: www.lorencook.com.

D. PennBarry: www.pennbarry.com.

E. Twin City Fan & Blower: www.tcf.com/#sle.

2.02 POWER VENTILATORS - GENERAL

A. Static and Dynamically Balanced: Comply with AMCA 204.

B. Performance Ratings: Comply with AMCA 210, bearing certified rating seal.

C. Sound Ratings: Comply with AMCA 301, tested to AMCA 300, bearing certified sound ratings seal.

D. Fabrication: Comply with AMCA 99.

E. UL Compliance: UL 705, listed, labeled, designed, manufactured, and tested.

F. Electrical Components: Listed and classified by Underwriters Laboratories Inc. as suitable for the purpose specified and indicated.

G. Enclosed Safety Switches: Comply with NEMA 250.

H. Kitchen Hood Exhaust Fans: Comply with requirements of NFPA 96 and UL 762.

2.03 WALL EXHAUSTERS

A. Fan Unit: V-belt or direct driven with spun aluminum housing; resiliently mounted motor; 1/2 inch mesh, 0.062 inch thick aluminum wire bird screen.

B. Disconnect Switch: Factory wired, nonfusible, in housing for thermal overload protected motor, and wall mounted multiple speed switch.

C. Backdraft Damper: Gravity actuated, aluminum multiple blade construction, felt edged with offset hinge pin, nylon bearings, blades linked, and line voltage motor drive, power open, spring return.

D. Sheaves: For V-belt drives, provide cast iron or steel, dynamically balanced, bored to fit shafts and keyed; variable and adjustable pitch motor sheaves selected so required rpm can be reached with sheaves set at mid-position; fan shaft with self-aligning prelubricated ball bearings.

2.04 INLINE CENTRIFUGAL FANS AND BLOWERS

A. Centrifugal Fan Unit: V-belt or direct driven, with galvanized steel housing lined with acoustic insulation, resiliently-mounted motor, gravity backdraft damper in discharge.

B. Disconnect Switch: Cord and plug-in housing for thermal overload protected motor and wall mounted switch.

C. Sheaves: Cast iron or steel, dynamically balanced, bored to fit shafts and keyed; variable and adjustable pitch motor sheaves selected so required rpm gets reached with sheaves set at mid-position; fan shaft with self-aligning prelubricated ball bearings.

2.05 KITCHEN HOOD UPBLAST ROOF EXHAUSTERS

DIRECT DRIVE FAN:

A. Fan Wheel:
   1. Type: Non-overloading, backward inclined centrifugal.
   2. Material: Aluminum, statically and dynamically balanced.

B. Housing:
   1. Construct of heavy gauge aluminum including curb cap, windband, and motor compartment.
   2. Rigid internal support structure.
   3. One-piece fabricated or fully welded curb-cap base to windband for leak proof construction.
   4. Construct drive frame assembly of heavy gauge steel, mounted on vibration isolators.
   5. Provide breather tube for fresh air motor cooling and wiring.

C. Shafts and Bearings:
   1. Fan Shaft:
      a. Ground and polished steel with anti-corrosive coating.
      b. First critical speed at least 25 percent over maximum cataloged operating speed.
   2. Bearings:
      a. Permanently sealed or pillow block type.
      b. Minimum L10 life in excess of 100,000 hours (equivalent to L50 average life of 500,000 hours), at maximum cataloged operating speed.
      c. 100 percent factory tested.

D. Drive Assembly:
   1. Belts, pulleys, and keys oversized for a minimum of 150 percent of driven horsepower.
   2. Belts: Static free and oil resistant.
   3. Fully machined cast iron type, keyed and securely attached to the wheel and motor shafts.
   4. Motor pulley adjustable for final system balancing.
   5. Readily accessible for maintenance.

E. Disconnect Switches:
   1. Factory mounted and wired.
   2. Environment Type per NEMA 250: Unless otherwise indicated, as specified for the following installation locations:
   3. Positive electrical shutoff.
   4. Wired from fan motor to junction box installed within motor compartment.

F. Roof Curb: 16 inch high self-flashing of galvanized steel with continuously welded seams, built-in cant strips, insulation and curb bottom, curb bottom, ventilated double wall, and factory installed nailer strip.

G. Drain Trough: Allows for single-point drainage of water, grease, and other residues.

H. Options/Accessories:
   1. Clean Out Port: Removable grease repellent compression rubber plug allows access for cleaning wheel through windband.
   2. Roof Curb Extension: Vented curb extension where required for compliance with minimum clearances required by NFPA 96.
   3. Drain Connection:
      a. Aluminum construction.
      b. Container allows single-point drainage of grease, water, or other residues.
   4. Grease Trap:
      a. Aluminum.
      b. Built-in drain connection.
      c. Container system to collect grease residue.
   5. Hinge Kit:
      a. Aluminum hinges.
      b. Hinges and restraint cables mounted to base sleeve.
      c. Allows fan to tilt away for access to wheel and ductwork for inspection and cleaning.

PART 3 EXECUTION

3.01 INSTALLATION

A. Install in accordance with manufacturer's instructions.

B. Secure roof exhausters with cadmium plated steel lag screws to roof curb.

C. Extend ducts to roof exhausters into roof curb. Counterflash duct to roof opening.

D. Provide sheaves required for final air balance.

E. Install units with clearances for service and maintenance.

F. For any equipment supplied with NFC (Near Field communication) enabled chip the chip must be intact and operable when turned over to the owner. If damaged during construction chip shall be replaced with new.

3.02 FIELD QUALITY CONTROL

A. Manufacturer's Field Service: Engage a factory-authorized service representative to inspect components, assemblies, and equipment installations, including connections, and to assist in testing.

B. Tests and Inspections:
   1. Verify that shipping, blocking, and bracing are removed.
   2. Verify that unit is secure on mountings and supporting devices and that connections to ducts and electrical components are complete. Verify that proper thermal-overload protection is installed in motors, starters, and disconnect switches.
   3. Verify that cleaning and adjusting are complete.
   4. Disconnect fan drive from motor, verify proper motor rotation direction, and verify fan wheel free rotation and smooth bearing operation. Reconnect fan drive system, align and adjust belts, and install belt guards.
   5. Adjust belt tension.
   6. Adjust damper linkages for proper damper operation.
   7. Verify lubrication for bearings and other moving parts.
   8. Verify that manual and automatic volume control and fire and smoke dampers in connected ductwork systems are in fully open position.
   9. Disable automatic temperature-control operators, energize motor and adjust fan to indicated rpm, and measure and record motor voltage and amperage.
   10. Shut unit down and reconnect automatic temperature-control operators.
   11. Remove and replace malfunctioning units and retest as specified above.

C. Test and adjust controls and safeties. Replace damaged and malfunctioning controls and equipment.

D. Prepare test and inspection reports.

END OF SECTION

SECTION 23 3700
AIR OUTLETS AND INLETS

PART 1 GENERAL

1.01 SECTION INCLUDES

A. Diffusers:

B. Registers/grilles:

C. Goosenecks.

1.02 RELATED REQUIREMENTS

A. Section 09 9123 - Interior Painting: Painting of ducts visible behind outlets and inlets.

1.03 REFERENCE STANDARDS

A. SMACNA (ASMM) - Architectural Sheet Metal Manual 2012.

B. SMACNA (DCS) - HVAC Duct Construction Standards Metal and Flexible 2021.

1.04 SUBMITTALS

A. See Section 01 3000 - Administrative Requirements for submittal procedures.

B. Product Data: Provide data for equipment required for this project. Review outlets and inlets as to size, finish, and type of mounting prior to submission. Submit schedule of outlets and inlets showing type, size, location, application, and noise level.

PART 2 PRODUCTS

2.01 MANUFACTURERS

A. Krueger: www.krueger-hvac.com.

B. Price Industries: www.price-hvac.com.

C. Titus: www.titus-hvac.com.

D. Tuttle and Bailey: www.tuttleandbailey.com/sle.

2.02 DIFFUSERS/GRILLES

A. See drawing schedules and details for required materials, finishes, styles, sizes, pattern, performanaces and accessories.

B. Internal insulation of slot diffuser plenums is not allowed. All slot diffusers plenums shall be externally insulated.

2.03 GOOSENECKS

A. Fabricate in accordance with of minimum 18 gauge, 0.0598 inch galvanized steel.

B. Mount on minimum 12 inch high curb base where size exceeds 9 by 9 inch.

PART 3 EXECUTION

3.01 INSTALLATION

A. Install in accordance with manufacturer's instructions.

B. Comply with SMACNA (ASMM) for flashing/counter-flashing of roof penetrations and supports for roof curbs and roof mounted equipment.

C. Check location of outlets and inlets and make necessary adjustments in position to comply with architectural features, symmetry, and lighting arrangement.

D. Install diffusers to ductwork with air tight connection.

E. Provide balancing dampers on duct take-off to diffusers, and grilles and registers. Dampers shall not be as part of the diffuser, or grille and register assembly.

F. Paint ductwork visible behind air outlets and inlets matte black, see Section 09 9123.

END OF SECTION

SECTION 23 3724
LOUVERS

PART 1 GENERAL

1.01 SECTION INCLUDES

A. Louvers, frames, and accessories.

1.02 RELATED REQUIREMENTS

A. Section 23 0913 - Instrumentation and Control Devices for HVAC: Actuators for operable louvers.

B. Section 23 0923 - Direct-Digital Control System for HVAC: Actuators for operable louvers.

C. Section 23 3100 - HVAC Ducts and Casings: Ductwork attachment to louvers.

D. Section 23 3300 - Air Duct Accessories: Fire/smoke dampers associated with exterior wall louvers.

E. Section 23 3700 - Air Outlets and Inlets: Louvered penthouse.

F. Section 28 4600 - Fire Detection and Alarm: Smoke control connection.

1.03 REFERENCE STANDARDS

A. AAMA 611 - Voluntary Specification for Anodized Architectural Aluminum 2020.

B. AMCA 500-L - Laboratory Methods of Testing Louvers for Rating 2012 (Reapproved 2015).

C. AMCA 511 - Certified Ratings Program Product Rating Manual for Air Control Devices 2021.

1.04 SUBMITTALS

A. See Section 01 3000 - Administrative Requirements, for submittal procedures.

B. Product Data: Provide data describing design characteristics, maximum recommended air velocity, design free area, materials and finishes.

C. Shop Drawings: Indicate louver layout plan and elevations, opening and clearance dimensions, tolerances; head, jamb and sill details; blade configuration, screens, blankout areas required, and frames.

D. Test Reports: Independent agency reports showing compliance with specified performance criteria.

E. Maintenance Data: Include lubrication schedules, adjustment requirements.

PART 2 PRODUCTS

2.01 MANUFACTURERS

A. Louvers:
   1. Greenheck.
   2. Nailor.

2.02 LOUVERS

A. Louvers: Factory fabricated and assembled, complete with frame, mullions, and accessories; AMCA Certified in accordance with AMCA 511.
   1. Wind Load Resistance: Design to resist positive and negative wind load of 25 psf without damage or permanent deformation.
   2. Intake Louvers: Design to allow maximum of 0.01 oz/sq ft water penetration at calculated intake design velocity based on design air flow and actual free area, when tested in accordance with AMCA 500-L.
   3. Drainable Blades: Continuous rain stop at front or rear of blade aligned with vertical gutter recessed into both jambs of frame.
   4. Screens: Provide insect screens at intake louvers and bird screens at exhaust louvers.

5. Hinged Units: Provide secondary frame to which louver frame is attached; non-ferrous hinges.

B. Stationary Louvers: Horizontal blade, extruded aluminum construction, with intermediate mullions matching frame.
1. Free Area: 50 percent, minimum.
2. Static Pressure Loss: 0.05 inch wg maximum per square foot of free area at velocity of 500 fpm, when tested in accordance with AMCA 500-L.
3. Blades: Straight.
4. Frame: 6 inches deep, channel profile; corner joints mitered and , with continuous recessed caulking channel each side.
5. Aluminum Thickness: Frame 12 gage, 0.0808 inch minimum; blades 12 gage, 0.0808 inch minimum.
6. Aluminum Finish: Class II natural anodized; finish welded units after fabrication.

2.03 MATERIALS

A. Extruded Aluminum: Heavy gauge 6063-T5 aluminum.

2.04 FINISHES

A. Class I Color Anodized Finish: AAMA 611 AA-M12C22A42 Integrally colored anodic coating not less than 0.7 mils thick.

B. Color: As selected from manufacturer's standard colors.

2.05 ACCESSORIES

A. Blank-Off Panels: Aluminum face and back sheets, polyisocyanurate foam core, 1-1/2 inch thick, painted black on exterior side; provide where duct connected to louver is smaller than louver frame, sealing off louver area outside duct.

B. Screens: Frame of same material as louver, with reinforced corners; removable, screw attached; installed on inside face of louver frame.

C. Bird Screen: Interwoven wire mesh of steel, 14 gage, 0.0641 inch diameter wire, 1/2 inch open weave, diagonal design.

D. Fasteners and Anchors: Galvanized steel.

E. Flashings: Of same material as louver frame, formed to required shape, single length in one piece per location.

F. Sealant for Setting Sills and Sill Flashing: Non-curing butyl type.

PART 3 EXECUTION

3.01 EXAMINATION

A. Verify that prepared openings and flashings are ready to receive this work and opening dimensions are as indicated on shop drawings.

B. Verify that field measurements are as indicated.

3.02 INSTALLATION

A. Install louver assembly in accordance with manufacturer's instructions.

B. Install louvers level and plumb.

C. Set sill members and sill flashing in continuous bead of sealant.

D. Install flashings and align louver assembly to ensure moisture shed from flashings and diversion of moisture to exterior.

E. Secure louver frames in openings with concealed fasteners.

F. Coordinate with installation of mechanical ductwork.

G. Coordinate with installation of louver actuators.

3.03 ADJUSTING

A. Adjust operable louvers for freedom of movement of control mechanism. Lubricate operating joints.

3.04 CLEANING

A. Strip protective finish coverings.

B. Clean surfaces and components.

END OF SECTION

SECTION 23 3813
COMMERCIAL-KITCHEN HOODS

PART 1 GENERAL

1.01 RELATED REQUIREMENTS

A. Section 10 4400 - Fire Protection Specialties: Hand held fire extinguishers.

B. Section 11 4000 - Foodservice Equipment: General provisions for hoods.

C. Section 11 4001 - Custom Fabricated Foodservice Equipment.

D. Section 21 1300 - Fire-Suppression Sprinkler Systems: Connection of hood fire extinguishing system to sprinkler system.

E. Section 22 1006 - Plumbing Piping Specialties: Floor drains for indirect discharge.

F. Section 22 1006 - Plumbing Piping Specialties: Electrically-operated gas valve for cooking equipment.

G. Section 23 3100 - HVAC Ducts and Casings: Exhaust and make-up air ducts.

H. Section 23 3416 - Centrifugal HVAC Fans: Kitchen exhaust fans.

I. Section 26 0583 - Wiring Connections: Connections to building power system.

J. Section 28 4600 - Fire Detection and Alarm: Connection of hood fire extinguishing system and fire dampers to building fire alarm system.

1.02 REFERENCE STANDARDS

A. ASTM A666 - Standard Specification for Annealed or Cold-Worked Austenitic Stainless Steel Sheet, Strip, Plate, and Flat Bar 2015.

B. NFPA 96 - Standard for Ventilation Control and Fire Protection of Commercial Cooking Operations 2021.

C. NSF 2 - Food Equipment 2021.

D. SMACNA (KVS) - Kitchen Ventilation Systems and Food Service Equipment Fabrication and Installation Guidelines 2001.

E. UL 710 - Standard for Exhaust Hoods for Commercial Cooking Equipment Current Edition, Including All Revisions.

F. UL 1046 - Standard for Grease Filters for Exhaust Ducts Current Edition, Including All Revisions.

1.03 SUBMITTALS

A. See Section 01 3000 - Administrative Requirements, for submittal procedures.

B. Product Data: Manufacturer's data sheets on each product to be used, including:
   1. Preparation instructions and recommendations.
   2. Storage and handling requirements and recommendations.
   3. Installation instructions, adjusting and balancing methods.

C. Shop Drawings: For each custom fabricated unit, provide drawings showing details of construction, dimensions, and interfaces with adjacent construction.

D. Test Reports for Grease Extracting Hoods: Provide test reports substantiating exhaust volume ratings and grease extraction performance.

E. Operation and Maintenance Data.

F. Warranty: Submit manufacturer's warranty and ensure that forms have been completed in Owner's name and registered with manufacturer.

G. Maintenance Materials: Furnish the following for Owner's use in maintenance of project.
   1. See Section 01 6000 - Product Requirements, for additional provisions.

2. Extra Detergent for Water Wash System: 5 gallons.

1.04 QUALITY ASSURANCE

A. Manufacturer Qualifications:
   1. At least five years experience in the design and manufacture of products of similar type to those specified.
   2. For grease extracting hoods, able to provide test data showing performance of hoods to be provided.
   3. Having at least one factory-authorized service agency located within 50 miles of project site.
   4. Able to provide service to project site within 24 hours after receiving a service call.

1.05 DELIVERY, STORAGE, AND HANDLING

A. Store products in manufacturer's unopened packaging until ready for installation.

PART 2 PRODUCTS

2.01 MANUFACTURERS

A. Grease Extracting Hoods:
   1. Ansul, a brand of Tyco Fire Protection Products: www.ansul.com/#sle.
   2. Grease Master: www.greasemaster.com/#sle.
   3. Greenheck Fan Corporation: www.greenheck.com/#sle.
   4. Halton, Halton Food Service Group: www.halton.com/#sle.

2.02 HOOD APPLICATIONS

2.03 HOOD CONSTRUCTION

A. Provide products that comply with NFPA 96, the requirements and recommendations of SMACNA (KVS), and the requirements of the Authorities Having Jurisdiction.

B. Cooking Hoods: Provide Type I hoods, with all external joints and seams continuously welded, liquid-tight, and all internal joints, seams, and attachments sealed liquid-tight and grease-tight.
   1. Provide fire extinguishing system for all cooking hoods.
   2. Provide complete assemblies listed and labeled by UL under UL 710 for its intended use.
   3. Provide hoods and exhaust ducts rated for zero clearance to combustible construction.
   4. Provide complete assemblies certified and labeled by NSF under NSF 2.

C. Construction: Materials, inside and out, are stainless steel complying with ASTM A666, Type 304, stretcher leveled; unless otherwise indicated.
   1. Sheet Thickness: 18 gauge, 0.048 inch, minimum.
   2. Fabrication: Fabricate each individual hood in one piece, with all welds ground and finished to match (inside and out); fabricate flat surfaces exposed to view as double-pan formed panels with internal stiffener members.
   3. Finish on Surfaces Exposed to View: No.4 (brushed directional); provide stainless steel faces on all sides exposed to view.
   4. Finish on Concealed Surfaces: No.4 or No.2B (dull, matte).
   5. Multiple Hoods: Where total hood length in one run is over 12 feet, provide multiple hoods, complete in all respects, of the largest size available and of approximately equal length, mounted end to end.
      a. Provide junction boxes for field interconnection of wiring.
      b. Provide pre-drilled holes for field connections, with stainless steel fasteners; if field welding is necessary, grind and polish welds to match adjacent finish.
   6. Duct Collars: For exhaust and make-up air openings, provide duct collar welded to hood unit; minimum of 8 inches extension from top or back face of unit, with minimum one inch 90 degree flange, unless otherwise indicated.

7. Access Panels: Provide removable or hinged access panels sufficient for maintenance and replacement of operating components inside unit; maximum width of 40 inches.
8. Electrical: Run electrical wiring in conduit or raceways, factory pre-wired, with single connection point per hood.
9. Supports: Stainless steel mounting brackets, struts, and threaded hanger rods.
    a. Hanger Rods: 3/8 inch diameter, minimum.
    b. Hanger Spacing: 48 inches on center, maximum.
    c. Attachment to Structure: Mechanical fittings or inserts, stainless steel.
10. Accessory Panels: Where indicated, provide filler and closure panels of same construction as hoods, to close spaces between hoods and adjacent construction; mount with panel face flush with face of hood.
    a. Where top of ceiling hung hood is lower than the finished ceiling, provide panels to close space between top of hood and ceiling.
    b. Where back of hood must be set away from wall, provide filler panels to close space between hood and wall.

D. Make-Up Air System: Provide motorized damper at louver. Motorized damper to open when hood is energized.
1. Diffusers: Louvered register with opposed blade dampers.
2. Plenum: Insulated with one inch thick foil-face fiberglass insulation, on inside of plenum.

2.04 GREASE EXTRACTING HOODS

A. Grease Extracting Hoods: Pre-engineered, factory-fabricated standard products; high-velocity centrifugal grease extraction without requiring filters, cartridges, moving parts, removable parts, or constantly running water, with grease collected in gutter piped to drain, and as specified above.
1. Performance: Remove 95 percent of extraneous matter in air stream at rated air velocity; provide substantiation.
2. Grease Extracting Baffles: Non-removable, adjustable for balancing.
3. Access Panels: Provide removable panels, with handles, for access to exhaust plenum for cleaning.
4. Label: Provide permanent label indicating rated exhaust performance.

2.05 HOOD ACCESSORIES

A. Fire Extinguishing Systems:
1. Manufacturers:
    a. Amerex: www.amerex-fire.com/#sle.
    b. Ansul, a Tyco Business: www.ansul.com/#sle.
    c. Grease Master: www.greasemaster.com/#sle.
2. Fire extinguishing system to comply with NFPA 96.
3. Exposed Piping Under Hood: Stainless steel or chrome plated.
4. Exposed Piping Outside Hood: Not permitted.
5. Nozzles: Stainless steel or chrome plated brass.
6. Electrical Components: Provide all components required for properly operating system, including but not limited to wiring, raceways, contactors, circuit breakers, switches and solenoids.
7. Fire Alarm System: Provide connection point for building fire alarm system capable of signaling system readiness and to generate signal when system is actuated.
8. Manual Actuators: Wall-mounted pull stations; provide one near each hood and one near exit door.

B. Controls:
1. Fans: Provide manual push button controls for starting and stopping fans and labeled indicator lights showing fan status.

2. Fans: Provide controls for fan operation by time clock, programmable by the week, capable of maintaining time cycle after operation of manual push buttons.
3. Cooking Equipment: Provide manual shutoff and reset button located where indicated; combine with fire extinguishing actuation.
4. Fire Extinguishing System: Provide automatic actuation complying with NFPA 96; provide local and remote manual actuating stations clearly labeled "Hood Fire Protection"; upon actuation of fire extinguishing system, automatically:
   a. Shut off fans serving that hood.
   b. Shut off fuel source to equipment under hood; actuate solenoid gas valves provided as part of gas piping work.
   c. Shut off electric power to equipment under hood; actuate contactors or switches provided as part of electrical work.
   d. Signal building fire alarm system; normally-open contacts.

C. Control Panels: Factory assembled and pre-wired, ready for utility connections.
1. UL listed for use with specific hood.
2. Provide a single control panel combining all control functions for a particular hood, unless otherwise indicated.
3. Provide a single control panel for each group of hoods served by a single exhaust fan.
4. Enclosures: Flush-mounted; stainless steel, to match hood.
5. Provide indicator lights on control panel door showing status of fans and power supply.

D. Lights Inside Hoods: Incandescent in quantity and locations indicated, in UL listed vapor-proof fixtures, pre-wired to junction box on top of hood.
1. Incandescent: Flush mounted, glass lens; 75 watt bulb.
2. Locate switch for operating lights in locations indicated.

E. Grease Filters: Stainless steel, washable, complying with , UL listed and labeled.

PART 3 EXECUTION

3.01 EXAMINATION

A. Verify that overhead supports are installed in correct locations.

B. Do not begin installation until substrates have been properly prepared.

C. If substrate preparation is the responsibility of another installer, notify Architect of unsatisfactory preparation before proceeding.

3.02 PREPARATION

A. Clean surfaces thoroughly prior to installation.

B. Prepare surfaces using the methods recommended by the manufacturer for achieving the best result for the substrate under the project conditions.

3.03 INSTALLATION

A. Install in accordance with manufacturer's instructions and NFPA 96.

B. Install hoods level and plumb, securely fastened, with seismic restraints as specified, and free of vibration during normal operation.

C. Weld hood duct collars to ductwork, liquid-tight.

D. Connect to utilities.

3.04 SYSTEM STARTUP

A. Obtain the services of the manufacturer's representative experienced in the installation, adjustment, and operation of the equipment to supervise the starting and adjusting of equipment.

B. Prepare equipment for startup, start and operate equipment for sufficient period to verify proper operation; correct equipment not operating correctly.

C. Test liquid carrying components for leaks.

D. Demonstrate operation to Owner's designated personnel.

E. Demonstrate operation to authorities having jurisdiction if required by them; comply with their requirements for demonstration.

F. Report deficiencies in writing to Architect.

3.05 CLOSEOUT ACTIVITIES

A. Conduct training of Owner's designated personnel in the operation and maintenance of equipment.

B. Perform at least 2 hours of training, for minimum of 2 people, at project site.

C. Arrange training sessions with Owner at least 2 weeks in advance.

D. Have operation and maintenance data on hand for training sessions.

3.06 CLEANING

A. Clean surfaces of equipment.

3.07 PROTECTION

A. Protect installed products until completion of project.

B. Touch-up, repair or replace damaged products before Date of Substantial Completion.

END OF SECTION

SECTION 23 5100
BREECHINGS, CHIMNEYS, AND STACKS

PART 1 GENERAL

1.01 SECTION INCLUDES

A. Field fabricated breechings.

B. Manufactured breechings.

C. Type B double wall gas vents.

D. Double wall metal stacks.

1.02 RELATED REQUIREMENTS

A. Section 23 0513 - Common Motor Requirements for HVAC Equipment: Induced draft fan motor.

B. Section 23 0716 - HVAC Equipment Insulation.

C. Section 26 0583 - Wiring Connections: Electrical characteristics and wiring connections.

D. Section 26 3213 - Engine Generators: Exhaust silencer.

1.03 REFERENCE STANDARDS

A. ANSI Z21.66 - American National Standard for Automatic Damper Devices for Use with Gas-Fired Appliances 2015 (Reaffirmed 2020).

B. ASME B31.9 - Building Services Piping 2020.

C. ASTM A653/A653M - Standard Specification for Steel Sheet, Zinc-Coated (Galvanized) or Zinc-Iron Alloy-Coated (Galvannealed) by the Hot-Dip Process 2020.

D. ASTM A1011/A1011M - Standard Specification for Steel, Sheet and Strip, Hot-Rolled, Carbon, Structural, High-Strength Low-Alloy, High-Strength Low-Alloy with Improved Formability, and Ultra-High Strength 2018a.

E. MSS SP-58 - Pipe Hangers and Supports - Materials, Design, Manufacture, Selection, Application, and Installation 2018, with Amendment (2019).

F. NFPA 31 - Standard for the Installation of Oil Burning Equipment 2020.

G. NFPA 54 - National Fuel Gas Code 2021.

H. NFPA 82 - Standard on Incinerators and Waste and Linen Handling Systems and Equipment 2019.

I. NFPA 211 - Standard for Chimneys, Fireplaces, Vents, and Solid Fuel-Burning Appliances 2019.

J. SMACNA (DCS) - HVAC Duct Construction Standards Metal and Flexible 2021.

K. UL 103 - Factory-Built Chimneys for Residential Type and Building Heating Appliances Current Edition, Including All Revisions.

L. UL 441 - Standard for Gas Vents Current Edition, Including All Revisions.

1.04 DEFINITIONS

A. Breeching: Vent connector.

B. Chimney: Primarily vertical shaft enclosing at least one vent for conducting flue gases outdoors.

C. Smoke Pipe: Round, single wall vent connector.

D. Vent: That portion of a venting system designed to convey flue gases directly outdoors from a vent connector or from an appliance when a vent connector is not used.

E. Vent Connector: That part of a venting system that conducts the flue gases from the flue collar of an appliance to a chimney or vent, and may include a draft control device.

1.05 SUBMITTALS

A. See Section 01 3000 - Administrative Requirements for submittal procedures.

B. Product Data: Provide data indicating factory built chimneys, including dimensional details of components and flue caps, dimensions and weights, electrical characteristics and connection requirements.

C. Shop Drawings: Indicate general construction, dimensions, weights, support and layout of breechings. Submit layout drawings indicating plan view and elevations where factory built units are used.

D. Manufacturer's Instructions: Include installation instructions, and indicate assembly, support details, and connection requirements.

PART 2 PRODUCTS

2.01 MANUFACTURERS

A. Breechings, Chimneys, and Stacks:
1. AMPCO by Hart & Cooley, Inc; Model VSI: www.ampcostacks.com/#sle.
2. DuraVent; DuraStack Pro (DIS2): www.duravent.com/#sle.
3. Metal-Fab, Inc: www.mtlfab.com/#sle.
4. Security Chimneys International; Secure Stack Pro (CIX2): www.securitychimneys.com/#sle.
5. Selkirk Corporation; Model PS: www.selkirkcommercial.com/#sle.
6. Z-Flex U.S. Inc: www.z-flex.com/#sle.

2.02 BREECHINGS, CHIMNEYS, AND STACKS - GENERAL REQUIREMENTS

A. Regulatory Requirements:
1. Comply with applicable codes for installation of natural gas burning appliances and equipment.
2. Comply with NFPA 31 for installation of oil burning appliances and equipment.
3. Products Requiring Electrical Connection: Listed and classified by Underwriters Laboratories Inc. as suitable for the purpose specified and indicated.

2.03 FIELD FABRICATED BREECHINGS

A. Breechings 24 inches or More in Diameter: Fabricate from ASTM A1011/A1011M Type B carbon steel; weld longitudinal seams and make end joints by welding, lapping and bolting, or with companion flanges.

B. Breechings Less Than 24 inches in Diameter: Fabricate from hot-dipped galvanized steel sheet, ASTM A653/A653M FS, with G90/Z275 coating; make longitudinal seams using pipe lock or flat lock groove seam and make end joints beaded and crimped.

C. Minimum Metal Thicknesses based on SMACNA (DCS):
1. Sizes up to 12 inches: 18 gauge, 0.0478 inch.
2. Sizes 13 to 24 inches: 16 gauge, 0.0598 inch.
3. Sizes 25 to 36 inches: 14 gauge, 0.0747 inch.
4. Sizes 37 to 60 inches: 12 gauge, 0.1046 inch.
5. Sizes over 60 inches: 10 gauge, 0.1345 inch.

D. Provide adjustable self-actuating barometric draft dampers, where indicated on drawings, full size of breeching.

E. Provide cleanout doors of same gauge as breeching where indicated on drawings.

F. Reinforcing: Provide angle frames for rectangular breeching and flanged girth joints or angle frames for round breeching in accordance with SMACNA (DCS), at following intervals:
1. Sizes up to 30 inches: No reinforcing required.
2. Sizes 31 to 36 inches: 1-1/2 by 1-1/2 by 3/16 inches, at 60 inch centers.

3. Sizes 37 to 60 inches: 2 by 2 by 1/4 inch, at 60 inch centers.
4. Sizes over 60 inches: 3 by 3 by 1/2 inch, at 60 inch centers.

2.04 MANUFACTURED BREECHINGS

A. Provide factory-built, modular connector and manifold system, tested to UL 103 with positive pressure rating.

B. Assembly to be UL listed for use with building equipment in compliance with NFPA 211.

C. Fabricate with 1 inch minimum air space between walls and construct inner liner of 304 stainless steel and outer jacket of 304 stainless steel.
1. Protect aluminized steel surfaces exposed to the elements with a minimum of one base coat of primer and one finish coat of corrosion resistant paint suitable for outer jacket skin temperatures of the application.

D. Design, fabricate, and install gas-tight preventing products of combustion leaking into the building.
1. Securely connect inner joints and seal with factory supplied overlapping V-bands and appropriate sealant in accordance with manufacturer's instructions.
2. System design to compensate for all flue gas induced thermal expansion.

2.05 TYPE B DOUBLE WALL GAS VENTS

A. Fabrication: Inner pipe of sheet aluminum, and outer pipe of galvanized sheet steel, tested in compliance with UL 441.

B. Electrically Actuated Vent Dampers: Same size as draft hood collar, constructed of stainless steel or galvanized steel, with corrosion-resistant components, in compliance with ANSI Z21.66.

2.06 DOUBLE WALL METAL STACKS

A. Provide double wall metal stacks, tested to UL 103 and UL listed with positive pressure rating, for use with building heating equipment, in compliance with NFPA 211.

B. Fabricate with 1 inch minimum air space between walls and construct inner liner of 304 stainless steel and outer jacket of AL29-4C stainless steel.
1. Protect aluminized steel surfaces exposed to the elements with a minimum of one base coat of primer and one finish coat of corrosion resistant paint suitable for outer jacket skin temperatures of the application.

C. Accessories, UL Labeled:
1. Ventilated Roof Thimble: Consists of roof penetration, vent flashing with spacers and storm collar.
2. Exit Cone: Consists of inner cone, and outer jacket, to increase stack exit velocity 1.5 times.
3. Stack Cap: Consists of conical rainshield with inverted cone for partial rain protection with low flow resistance.

PART 3 EXECUTION

3.01 INSTALLATION

A. Install in accordance with manufacturer's instructions.

B. Install in accordance with NFPA 54

C. Install breechings with minimum of joints. Align accurately at connections, with internal surfaces smooth.

D. Support breechings from building structure, rigidly with suitable ties, braces, hangers and anchors to hold to shape and prevent buckling. Support vertical breechings, chimneys, and stacks at 12 foot spacing, to adjacent structural surfaces, or at floor penetrations. Refer to SMACNA (DCS) for equivalent duct support configuration and size.

E. Install concrete inserts for support of breechings, chimneys, and stacks in coordination with formwork.

F. Pitch breechings with positive slope up from fuel-fired equipment to chimney or stack.

G. Insulate breechings in accordance with Section 23 0716.

H. For Type B double wall gas vents, maintain UL listed minimum clearances from combustibles. Assemble pipe and accessories as required for complete installation.

I. Install vent dampers, locating close to draft hood collar, and secured to breeching.

J. Assemble and install stack sections in accordance with NFPA 82, industry practices, and in compliance with UL listing. Join sections with acid-resistant joint cement. Connect base section to foundation using anchor lugs.

K. Level and plumb chimney and stacks.

L. Clean breechings, chimneys, and stacks during installation, removing dust and debris.

M. At appliances, provide slip joints permitting removal of appliances without removal or dismantling of breechings, breeching insulation, chimneys, or stacks.

N. Provide maximum 2 feet of breeching to connect appliance to chimney. Provide Type B chimney continuously from appliances.

O. Engine Exhaust:
   1. Install engine exhaust piping in accordance with MSS SP-58 and ASME B31.9.
   2. Install exhaust silencer provided in accordance with Section 26 3213.
   3. Provide sleeves with sufficient length to pass through entire thickness of walls, floors, roofs, partitions, or slabs.
   4. Extend sleeves in floor slabs 2 inches above finished floor.
   5. Firmly pack insulation between pipe and sleeve and caulk both ends with plastic waterproof cement.
   6. Space Between Pipe Insulation and Sleeve: Not less than 0.25 inch thick.

END OF SECTION

SECTION 23 5400
FURNACES

PART 1 GENERAL

1.01 SECTION INCLUDES

A. Forced air furnaces.

B. Thermostats.

1.02 RELATED REQUIREMENTS

A. Section 23 0513 - Common Motor Requirements for HVAC Equipment: Additional requirements for fan motors.

B. Section 23 0548 - Vibration and Seismic Controls for HVAC.

C. Section 23 0713 - Duct Insulation: Duct liner.

D. Section 23 0913 - Instrumentation and Control Devices for HVAC: Thermostats, humidistats, time clocks.

E. Section 23 3100 - HVAC Ducts and Casings.

F. Section 23 5100 - Breechings, Chimneys, and Stacks: Flue or stack.

G. Section 26 0583 - Wiring Connections: Electrical characteristics and wiring connections and installation and wiring of thermostats and other controls components.

1.03 REFERENCE STANDARDS

A. ANSI Z21.47 - American National Standard for Gas-Fired Central Furnaces 2021.

B. ASHRAE Std 103 - Methods of Testing for Annual Fuel Utilization Efficiency of Residential Central Furnaces and Boilers 2022.

C. NFPA 54 - National Fuel Gas Code 2021.

D. NFPA 90A - Standard for the Installation of Air-Conditioning and Ventilating Systems 2021.

E. NFPA 211 - Standard for Chimneys, Fireplaces, Vents, and Solid Fuel-Burning Appliances 2019.

1.04 SUBMITTALS

A. See Section 01 3000 - Administrative Requirements, for submittal procedures.

B. Product Data: Provide rated capacities, weights, accessories, electrical nameplate data, and wiring diagrams.

C. Manufacturer's Instructions: Indicate rigging, assembly, and installation instructions.

D. Operation and Maintenance Data: Include manufacturer's descriptive literature, operating instructions, installation instructions, maintenance and repair data, and parts listing.

E. Warranty: Submit manufacturers warranty and ensure forms have been filled out in Owner's name and registered with manufacturer.

1.05 WARRANTY

A. See Section 01 7800 - Closeout Submittals, for additional warranty requirements.

B. Provide three year manufacturers warranty for solid state ignition modules.

C. Provide five year manufacturers warranty for heat exchangers.

PART 2 PRODUCTS

2.01 MANUFACTURERS

A. Carrier Corporation, a brand of United Technologies Corporation Building & Industrial Systems: www.carrier.com/#sle.

B. Trane Inc, a subsidiary of Ingersoll Rand: www.trane.com/#sle.

C. York International Corporation / Johnson Controls: www.york.com/#sle.

2.02 GAS FIRED FURNACES

A. Annual Fuel Utilization Efficiency (AFUE): 0.95 ("condensing") in accordance with ASHRAE Std 103.

B. Units: Self-contained, packaged, factory assembled, pre-wired unit consisting of cabinet, supply fan, heating element, controls, air filter, humidifier, and accessories; wired for single power connection with control transformer.
   1. Safety certified by CSA in accordance with ANSI Z21.47.
   2. Venting System: Direct.
   3. Combustion: Sealed.
   4. Air Flow Configuration: Upflow.
   5. Heating: Natural gas fired.
   6. Accessories:
      a. Condensate drain.
      b. Concentric roof termination kit.

C. Cabinet: Steel with baked enamel finish, easily removed and secured access doors with safety interlock switches, glass fiber insulation with reflective liner. If not certified for combustible flooring, please provide additional steel base.

D. Primary Heat Exchanger:
   1. Material: Hot-rolled steel.
   2. Shape: Tubular type.

E. Secondary Heat Exchanger:
   1. Material: Aluminized steel.

F. Gas Burner:
   1. Atmospheric type with adjustable combustion air supply.
   2. Gas valve, two stage provides 100 percent safety gas shut-off; 24 volt combining pressure regulation, safety pilot, manual set (On-Off), pilot filtration, automatic electric valve.
   3. Electronic pilot ignition, with electric spark igniter.
   4. Combustion air damper with synchronous spring return damper motor.
   5. Non-corrosive combustion air blower with permanently lubricated motor.

G. Gas Burner Safety Controls:
   1. Thermocouple sensor: Prevents opening of gas valve until pilot flame is proven and stops gas flow on ignition failure.
   2. Flame rollout switch: Installed on burner box and prevents operation.
   3. Vent safety shutoff sensor: Temperature sensor installed on draft hood and prevents operation, manual reset.
   4. Limit Control: Fixed stop at maximum permissible setting, de-energizes burner on excessive bonnet temperature, automatic resets.

H. Supply Fan: Centrifugal type rubber mounted with direct drive with adjustable variable pitch motor pulley.

I. Motor:

1. 1750 rpm single-speed, permanently lubricated, hinge mounted.

J. Air Filters: 1 inch thick urethane, washable type arranged for easy replacement.

K. Operating Controls:
1. Room Thermostat: Cycles burner to maintain room temperature setting.
2. Supply Fan Control: Energize from bonnet temperature independent of burner controls, with adjustable timed off delay and fixed timed on delay, with manual switch for continuous fan operation. Provide continuous low speed fan operation.

2.03 ECONOMIZER DAMPER UNITS

A. Manufacturers:
1. Carrier Corporation: www.carrier.com/#sle.
2. Trane Inc: www.trane.com/#sle.
3. York International Corporation / Johnson Controls: www.york.com/#sle.

B. Cabinet: Steel with baked enamel finish, easily removed and secured access doors, glass fiber insulation.

C. Dampers: Formed steel with nylon bearings and gaskets.

D. Dampers Operator: 24 volt, three position spring return motor with adjustable minimum position switch.

E. Controls:
1. Controls: Room thermostat, discharge air thermostat, adjustable outdoor air "enthalpy" control, return air "enthalpy" sensor position dampers.

2.04 THERMOSTATS

A. Manufacturers:
1. Carrier Corporation: www.carrier.com/#sle.
2. Trane Inc: www.trane.com/#sle.
3. York International Corporation / Johnson Controls: www.york.com/#sle.

B. Room Thermostat: Low voltage, electric solid state microcomputer based room thermostat with remote sensor:
1. System selector switch (heat-off) and fan control switch (auto-on).
2. Preferential rate control to minimize overshoot and deviation from setpoint.
3. Set-up for four separate temperatures per day.
4. Instant override of setpoint for continuous or timed period from one hour to 31 days.
5. Short cycle protection.
6. Programming based on weekdays, Saturday and Sunday.
7. Selection features including degree F or degree C display, 12 or 24 hour clock, keyboard disable, remote sensor, fan on-auto.
8. Battery replacement without program loss.
9. Thermostat Display:
a. Time of day.
b. Actual room temperature.
c. Programmed temperature.
d. Programmed time.
e. Duration of timed override.
f. Day of week.
g. System Mode Indication: Heating, cooling, fan auto, off, and on, auto or on, off.

PART 3 EXECUTION

3.01 EXAMINATION

A. Verify that substrates are ready for installation of units and openings are as indicated on shop drawings.

B. Verify that proper power supply is available and located correctly.

C. Verify that proper fuel supply is available for connection.

3.02 INSTALLATION

A. Install in accordance with manufacturer's instructions and requirements of authorities having jurisdiction.

B. Install in accordance with NFPA 90A.

C. Install gas fired furnaces in accordance with NFPA 54.

D. Provide vent connections in accordance with NFPA 211.

END OF SECTION

SECTION 23 6313
AIR COOLED REFRIGERANT CONDENSERS

PART 1 GENERAL

1.01 SECTION INCLUDES

A. Manufactured units.

B. Casing.

C. Condenser coils.

D. Fan requirements.

E. Controls.

1.02 RELATED REQUIREMENTS

A. Section 03 3000 - Cast-in-Place Concrete: Equipment bases.

B. Section 23 0513 - Common Motor Requirements for HVAC Equipment.

C. Section 23 2300 - Refrigerant Piping.

D. Section 26 0583 - Wiring Connections: Electrical characteristics and wiring connections.

1.03 REFERENCE STANDARDS

A. AHRI 210/240 - Performance Rating of Unitary Air-Conditioning and Air-Source Heat Pump Equipment 2023.

B. ASHRAE Std 15 - Safety Standard for Refrigeration Systems 2019, with All Amendments and Errata.

C. ASHRAE Std 20 - Methods of Laboratory Testing Remote Mechanical-Draft Air-Cooled Refrigerant Condensers 2019.

D. ASHRAE Std 90.1 I-P - Energy Standard for Buildings Except Low-Rise Residential Buildings Most Recent Edition Adopted by Authority Having Jurisdiction, Including All Applicable Amendments and Supplements.

E. NEMA 250 - Enclosures for Electrical Equipment (1000 Volts Maximum) 2020.

F. UL 207 - Standard for Refrigerant-Containing Components and Accessories, Nonelectrical Current Edition, Including All Revisions.

1.04 SUBMITTALS

A. See Section 01 3000 - Administrative Requirements for submittal procedures.

B. Product Data: Provide rated capacities, weights, accessories, electrical requirements, and wiring diagrams.

C. Manufacturer's Instructions: Submit manufacturer's complete installation instructions.

D. Operation and Maintenance Data: Include start-up instructions, maintenance instructions, parts lists, controls, and accessories.

1.05 DELIVERY, STORAGE, AND HANDLING

A. Comply with manufacturer's installation instruction for rigging, unloading and transporting units.

B. Protect units on site from physical damage. Protect coils.

PART 2 PRODUCTS

2.01 MANUFACTURERS

A. Carrier, a part of UTC Building and Industrial Systems, a unit of United Technologies Corp: www.carrier.com/#sle.

B. Trane, a brand of Ingersoll Rand: www.trane.com/#sle.

C. York International Corporation/Johnson Controls, Inc: www.york.com/#sle.

2.02 MANUFACTURED UNITS

A. Provide packaged, factory assembled, pre-wired unit, suitable for outdoor use consisting of casing, condensing coil and fans, integral sub-cooling coil liquid accumulator.

B. Construction and Ratings: In accordance with AHRI 210/240 and UL 207. Testing shall be in accordance with ASHRAE Std 20.

C. Performance Ratings: Energy Efficient Rating (EER)/Coefficient of Performance (COP) not less than prescribed by ASHRAE Std 90.1 I-P, in combination with compressor units.

D. Refrigerant: Use only refrigerants that have ozone depletion potential (ODP) of zero and global warming potential (GWP) of less than 50.

2.03 CASING

A. House components in welded steel frame with steel panels with weather resistant, baked enamel finish.

B. Mount starters, disconnects, and controls in weatherproof panel provided with full opening access doors. Provide mechanical interlock to disconnect power when door is opened.

C. Provide removable access doors or panels with quick fasteners.

2.04 CONDENSER COILS

A. Coils: Aluminum fins mechanically bonded to seamless copper tubing. Provide sub-cooling circuits. Air test under water to 425 psig, and vacuum dehydrate. Seal with holding charge of nitrogen.

B. Coil Guard: Expanded metal with lint screens.

2.05 FAN REQUIREMENTS

A. Vertical discharge direct driven propeller type condenser fans with fan guard on discharge, equipped with roller or ball bearings with grease fittings extended to outside of casing.

B. Motors as indicated, in compliance with Section 23 0513.

2.06 CONTROLS

A. Provide factory wired and mounted control panel, NEMA 250, containing fan motor starters, fan cycling thermostats, compressor interlock, and control transformer.

B. Provide controls to permit operation down to 0 degrees F ambient temperature.

C. Provide thermostat to cycle fan motors in response to outdoor ambient temperature.

D. Provide head pressure switch to cycle fan motors in response to refrigerant condensing pressure.

E. Provide solid state control to vary speed of one condenser fan motor in response to refrigerant condensing pressure.

F. Provide electronic low ambient control consisting of mixing damper assembly, controlled to maintain constant refrigerant condensing pressure.

PART 3 EXECUTION

3.01 INSTALLATION

A. Install in accordance with manufacturer's instructions.

B. Provide for connection to electrical service. See Section 26 0583.

C. Align condensers on concrete foundations. See Section 03 3000

D. Provide connection to refrigeration piping system. See Section 23 2300. Comply with ASHRAE Std 15.

E. Provide cooling season start-up, winter season shut-down service, for first year of operation.

F. Shut-down system if initial start-up and testing takes place in winter and machines are to remain inoperative. Repeat start-up and testing operation at beginning of first cooling season.

END OF SECTION

SECTION 23 8200
CONVECTION HEATING AND COOLING UNITS

PART 1 GENERAL

1.01 SECTION INCLUDES

A. Electric convectors.

B. Electric cabinet unit heaters.

1.02 RELATED REQUIREMENTS

A. Section 26 0583 - Wiring Connections: Electrical characteristics and wiring connections. Installation of room thermostats. Electrical supply to units.

1.03 REFERENCE STANDARDS

1.04 SUBMITTALS

A. See Section 01 3000 - Administrative Requirements for submittal procedures.

B. Product Data: Provide typical catalog of information including arrangements.

PART 2 PRODUCTS

2.01 ELECTRIC CABINET UNIT HEATERS

A. Manufacturers:
   1. INDEECO (Industrial Engineering and Equipment Company): www.indeeco.com/#sle.
   2. Marley Engineered Products: www.marleymep.com/#sle.
   3. Trane, a brand of Ingersoll Rand: www.trane.com/#sle.

B. Provide products listed, classified, and labeled by Underwriters Laboratories Inc. (UL), Intertek (ETL), or testing firm acceptable to Authority Having Jurisdiction as suitable for the purpose indicated.

C. Heating Elements: Provide open-wire, finned tubular, or resistance wire enclosed in steel sheath.

D. Finish:
   1. Factory applied, painted finish.
   2. Color: As indicated on drawings.

E. Fan: Centrifugal forward-curved double-width wheels, statically and dynamically balanced, direct driven.

F. Motor: Tap wound multiple speed permanent split capacitor with sleeve bearings, resiliently mounted.

G. Controls:
   1. Step-down transformer.
   2. Auxiliary relay.
   3. 2-speed fan switch.
   4. Built-in line-voltage thermostat.

H. Filter: Easily removed, 1 inch thick glass fiber throw-away type, located to filter air before coil.

I. Fresh Air Dampers: Where indicated, manual type, set to allow maximum of 25 percent fresh air to enter the space.

PART 3 EXECUTION

3.01 EXAMINATION

A. Verify that surfaces are suitable for installation.

B. Verify that field measurements are as indicated on drawings.

3.02 INSTALLATION

A. Install in accordance with manufacturer's recommendations.

B. Do not damage equipment or finishes.

C. For any equipment supplied with NFC (Near Field communication) enabled chip the chip must be intact and operable when turned over to the owner. If damaged during construction chip shall be replaced with new.

D. Unit Heaters:
   1. Hang from building structure, with pipe hangers anchored to building, not from piping or electrical conduit.
   2. Mount as high as possible to maintain greatest headroom unless otherwise indicated.

E. Cabinet Unit Heaters:
   1. Install as indicated.
   2. Coordinate to ensure correct recess size for recessed units.

F. Units with Electric Heating Elements:
   1. Install as indicated including electrical devices furnished by manufacturer but not factory installed.
   2. Install wiring in accordance with the manufacturer's wiring diagram submittal and Section 26 0583.

3.03 FIELD QUALITY CONTROL

A. See Section 01 4000 - Quality Requirements for additional requirements.

3.04 CLEANING

A. After construction and painting is completed, clean exposed surfaces of units.

B. Vacuum clean coils and inside of units.

C. Touch-up marred or scratched surfaces of factory-finished cabinets using finish materials furnished by the manufacturer.

D. Install new filters.

3.05 PROTECTION

A. Provide finished cabinet units with protective covers during the balance of construction.

END OF SECTION

SECTION 23 8216
AIR COILS

PART 1 GENERAL

1.01 SECTION INCLUDES

A. Refrigerant coils.

1.02 RELATED REQUIREMENTS

A. Section 23 0719 - HVAC Piping Insulation.

B. Section 23 2114 - Hydronic Specialties.

C. Section 23 2214 - Steam and Condensate Heating Specialties.

D. Section 23 2300 - Refrigerant Piping.

E. Section 23 3100 - HVAC Ducts and Casings: Installation of duct coils.

F. Section 26 0583 - Wiring Connections: Electrical characteristics and wiring connections.

1.03 REFERENCE STANDARDS

A. SMACNA (DCS) - HVAC Duct Construction Standards Metal and Flexible 2021.

1.04 SUBMITTALS

A. See Section 01 3000 - Administrative Requirements, for submittal procedures.

B. Product Data: Provide coil and frame configurations, dimensions, materials, rows, connections, and rough-in dimensions.

C. Shop Drawings: Indicate coil and frame configurations, dimensions, materials, rows, connections, and rough-in dimensions.

1.05 DELIVERY, STORAGE, AND HANDLING

A. Protect coil fins from crushing and bending by leaving in shipping cases until installation, and by storing indoors.

B. Protect coils from entry of dirt and debris with pipe caps or plugs.

PART 2 PRODUCTS

2.01 REFRIGERANT COILS

A. Manufacturers:
   1. Aerofin Corporation: www.aerofin.com/#sle.
   2. Luvata UK Ltd: www.luvata.com/#sle.
   3. Trane, a brand of Ingersoll Rand: www.trane.com/#sle.
   4. York/JCI..
   5. Carrier.

B. Tubes: 5/8 inch OD seamless copper or brass arranged in parallel or staggered pattern, expanded into fins, silver brazed joints.

C. Fins: Aluminum or copper continuous plate type with full fin collars. Solder coat copper fin coils.

D. Casing: Die formed channel frame of 16 gauge, 0.0598 inch galvanized steel with 3/8 inch mounting holes on 3 inch centers. Provide tube supports for coils longer than 36 inches.

E. Headers: Seamless copper or brass tubes with silver brazed joints.

F. Liquid Distributors: Brass or copper venturi type distributor with seamless copper distributor tubes, 5/16 inch outside diameter; maximum 12 circuits per distributor.

G. Testing: Air test under water at 300 psi for working pressure of 250 psi; clean, dehydrate, and seal with dry nitrogen charge.

H. Configuration: Down feed with bottom suction to prevent trapping of oil.

PART 3 EXECUTION

3.01 INSTALLATION

A. Install in accordance with manufacturer's written instructions.

B. Install in ducts and casings in accordance with SMACNA (DCS).
   1. Support coil sections independent of piping on steel channel or double angle frames and secure to casings.
   2. Provide frames for maximum three coil sections.
   3. Arrange supports to avoid piercing drain pans.
   4. Provide airtight seal between coil and duct or casing.
   5. Refer to Section 23 3100.

C. Protect coils to prevent damage to fins and flanges. Comb out bent fins.

D. Install coils level. Install cleanable tube coils with 1:50 pitch.

E. Make connections to coils with unions and flanges.

F. Refrigerant Coils: Provide sight glass in liquid line within 12 inches of coil. Refer to Section 23 2300.

G. Insulate headers located outside air flow as specified for piping. Refer to Section 23 0719.

END OF SECTION

SECTION 26 0505
SELECTIVE DEMOLITION FOR ELECTRICAL

PART 1 GENERAL

1.01 SECTION INCLUDES

A. Electrical demolition.

1.02 SUBMITTALS

A. See Section 01 3000 - Administrative Requirements, for submittal procedures.

B. Sustainable Design Documentation: Submit certification of removal and appropriate disposal of abandoned cables containing lead stabilizers.

PART 2 PRODUCTS

2.01 MATERIALS AND EQUIPMENT

A. Materials and equipment for patching and extending work: As specified in individual sections.

PART 3 EXECUTION

3.01 EXAMINATION

A. Verify field measurements and circuiting arrangements are as indicated.

B. Verify that abandoned wiring and equipment serve only abandoned facilities.

C. Report discrepancies to Architect before disturbing existing installation.

D. Beginning of demolition means installer accepts existing conditions.

3.02 PREPARATION

A. Disconnect electrical systems in walls, floors, and ceilings to be removed.

B. Coordinate utility service outages with utility company.

C. Provide temporary wiring and connections to maintain existing systems in service during construction. When work must be performed on energized equipment or circuits, use personnel experienced in such operations.

D. Existing Electrical Service: Maintain existing system in service until new system is complete and ready for service. Disable system only to make switchovers and connections. Minimize outage duration.

3.03 DEMOLITION AND EXTENSION OF EXISTING ELECTRICAL WORK

A. Perform work for removal and disposal of equipment and materials containing toxic substances regulated under the Federal Toxic Substances Control Act (TSCA) in accordance with applicable federal, state, and local regulations. Applicable equipment and materials include, but are not limited to:
   1. PCB-containing electrical equipment, including transformers, capacitors, and switches.
   2. PCB- and DEHP-containing lighting ballasts.
   3. Mercury-containing lamps and tubes, including fluorescent lamps, high intensity discharge (HID), arc lamps, ultra-violet, high pressure sodium, mercury vapor, ignitron tubes, neon, and incandescent.

B. Remove, relocate, and extend existing installations to accommodate new construction.

C. Remove abandoned wiring to source of supply.

D. Remove exposed abandoned conduit, including abandoned conduit above accessible ceiling finishes. Cut conduit flush with walls and floors, and patch surfaces.

E. Disconnect abandoned outlets and remove devices. Remove abandoned outlets if conduit servicing them is abandoned and removed. Provide blank cover for abandoned outlets that are not removed.

F. Disconnect and remove abandoned panelboards and distribution equipment.

G. Disconnect and remove electrical devices and equipment serving utilization equipment that has been removed.

H. Disconnect and remove abandoned luminaires. Remove brackets, stems, hangers, and other accessories.

I. Repair adjacent construction and finishes damaged during demolition and extension work.

J. Maintain access to existing electrical installations that remain active. Modify installation or provide access panel as appropriate.

END OF SECTION

SECTION 26 0519
LOW-VOLTAGE ELECTRICAL POWER CONDUCTORS AND CABLES

PART 1 GENERAL

1.01 SECTION INCLUDES

A. Single conductor building wire.

B. Nonmetallic-sheathed cable.

C. Service entrance cable.

D. Armored cable.

E. Metal-clad cable.

F. Power and control tray cable.

G. Wiring connectors.

H. Electrical tape.

I. Heat shrink tubing.

J. Oxide inhibiting compound.

K. Wire pulling lubricant.

L. Cable ties.

M. Firestop sleeves.

1.02 RELATED REQUIREMENTS

A. Section 07 8400 - Firestopping.

B. Section 26 0526 - Grounding and Bonding for Electrical Systems: Additional requirements for grounding conductors and grounding connectors.

C. Section 26 0553 - Identification for Electrical Systems: Identification products and requirements.

1.03 REFERENCE STANDARDS

A. ASTM B3 - Standard Specification for Soft or Annealed Copper Wire 2013 (Reapproved 2018).

B. ASTM B8 - Standard Specification for Concentric-Lay-Stranded Copper Conductors, Hard, Medium-Hard, or Soft 2011 (Reapproved 2017).

C. ASTM B33 - Standard Specification for Tin-Coated Soft or Annealed Copper Wire for Electrical Purposes 2010, with Editorial Revision (2020).

D. ASTM B787/B787M - Standard Specification for 19 Wire Combination Unilay-Stranded Copper Conductors for Subsequent Insulation 2004 (Reapproved 2020).

E. ASTM D3005 - Standard Specification for Low-Temperature Resistant Vinyl Chloride Plastic Pressure-Sensitive Electrical Insulating Tape 2017.

F. ASTM D4388 - Standard Specification for Nonmetallic Semi-Conducting and Electrically Insulating Rubber Tapes 2020.

G. NECA 1 - Standard for Good Workmanship in Electrical Construction 2015.

H. NECA 120 - Standard for Installing Armored Cable (AC) and Type Metal-Clad (MC) Cable 2018.

I. NEMA WC 70 - Power Cables Rated 2000 Volts or Less for the Distribution of Electrical Energy 2021.

J. NETA ATS - Standard For Acceptance Testing Specifications For Electrical Power Equipment And Systems 2021.

K. NFPA 70 - National Electrical Code Most Recent Edition Adopted by Authority Having Jurisdiction, Including All Applicable Amendments and Supplements.

L. UL 4 - Armored Cable Current Edition, Including All Revisions.

M. UL 44 - Thermoset-Insulated Wires and Cables Current Edition, Including All Revisions.

N. UL 83 - Thermoplastic-Insulated Wires and Cables Current Edition, Including All Revisions.

O. UL 267 - Outline of Investigation for Wire-Pulling Compounds Most Recent Edition, Including All Revisions.

P. UL 486A-486B - Wire Connectors Current Edition, Including All Revisions.

Q. UL 486C - Splicing Wire Connectors Current Edition, Including All Revisions.

R. UL 486D - Sealed Wire Connector Systems Current Edition, Including All Revisions.

S. UL 510 - Polyvinyl Chloride, Polyethylene, and Rubber Insulating Tape Current Edition, Including All Revisions.

T. UL 854 - Service-Entrance Cables Current Edition, Including All Revisions.

U. UL 1277 - Electrical Power and Control Tray Cables with Optional Optical-Fiber Members Current Edition, Including All Revisions.

V. UL 1569 - Metal-Clad Cables Current Edition, Including All Revisions.

1.04 ADMINISTRATIVE REQUIREMENTS

A. Coordination:
1. Coordinate sizes of raceways, boxes, and equipment enclosures installed under other sections with the actual conductors to be installed, including adjustments for conductor sizes increased for voltage drop.
2. Coordinate with electrical equipment installed under other sections to provide terminations suitable for use with the conductors to be installed.
3. Notify Architect of any conflicts with or deviations from Contract Documents. Obtain direction before proceeding with work.

1.05 SUBMITTALS

A. Product Data: Provide manufacturer's standard catalog pages and data sheets for conductors and cables, including detailed information on materials, construction, ratings, listings, and available sizes, configurations, and stranding.

B. Field Quality Control Test Reports.

1.06 QUALITY ASSURANCE

A. Comply with requirements of NFPA 70.

B. Manufacturer Qualifications: Company specializing in manufacturing the products specified in this section with minimum three years documented experience.

C. Product Listing Organization Qualifications: An organization recognized by OSHA as a Nationally Recognized Testing Laboratory (NRTL) and acceptable to authorities having jurisdiction.

1.07 DELIVERY, STORAGE, AND HANDLING

A. Receive, inspect, handle, and store conductors and cables in accordance with manufacturer's instructions.

PART 2 PRODUCTS

2.01 CONDUCTOR AND CABLE APPLICATIONS

A. Do not use conductors and cables for applications other than as permitted by NFPA 70 and product listing.

B. Provide single conductor building wire installed in suitable raceway unless otherwise indicated, permitted, or required.

C. Service entrance cable is permitted only as follows:
   1. Where not otherwise restricted, may be used:
      a. For overhead service drop, installed in raceway to service head.
      b. For underground service entrance, installed in raceway.

D. Metal-clad cable is permitted only as follows:
   1. Where not otherwise restricted, may be used:
      a. Where concealed above accessible ceilings for final connections from junction boxes to luminaires.
         1) Maximum Length: 6 feet.
   2. In addition to other applicable restrictions, may not be used:
      a. Unless approved by Owner.
      b. Where not approved for use by the authority having jurisdiction.
      c. Where exposed to view.
      d. Where exposed to damage.
      e. For damp, wet, or corrosive locations, unless provided with a PVC jacket listed as suitable for those locations.
      f. For isolated ground circuits, unless provided with an additional isolated/insulated grounding conductor.
      g. For patient care areas of health care facilities requiring redundant grounding.

2.02 CONDUCTOR AND CABLE GENERAL REQUIREMENTS

A. Provide products that comply with requirements of NFPA 70.

B. Provide products listed, classified, and labeled as suitable for the purpose intended.

C. Provide new conductors and cables manufactured not more than one year prior to installation.

D. Unless specifically indicated to be excluded, provide all required conduit, boxes, wiring, connectors, etc. as required for a complete operating system.

E. Comply with NEMA WC 70.

F. Thermoplastic-Insulated Conductors and Cables: Listed and labeled as complying with UL 83.

G. Thermoset-Insulated Conductors and Cables: Listed and labeled as complying with UL 44.

H. Conductors for Grounding and Bonding: Also comply with Section 26 0526.

I. Conductors and Cables Installed in Cable Tray: Listed and labeled as suitable for cable tray use.

J. Conductors and Cables Installed Where Exposed to Direct Rays of Sun: Listed and labeled as sunlight resistant.

K. Conductors and Cables Installed Exposed in Spaces Used for Environmental Air (only where specifically permitted): Plenum rated, listed and labeled as suitable for use in return air plenums.

L. Conductor Material:
   1. Provide copper conductors only. Aluminum conductors are not acceptable for this project. Conductor sizes indicated are based on copper.
   2. Copper Conductors: Soft drawn annealed, 98 percent conductivity, uncoated copper conductors complying with ASTM B3, ASTM B8, or ASTM B787/B787M unless otherwise indicated.
   3. Tinned Copper Conductors: Comply with ASTM B33.

M. Minimum Conductor Size:
   1. Branch Circuits: 12 AWG.
   2. Control Circuits: 14 AWG.

N. Where conductor size is not indicated, size to comply with NFPA 70 but not less than applicable minimum size requirements specified.

O. Conductor Color Coding:
   1. Color code conductors as indicated unless otherwise required by the authority having jurisdiction. Maintain consistent color coding throughout project.
   2. Color Coding Method: Integrally colored insulation.
   3. Color Code:
      a. 240/120 V, 1 Phase, 3 Wire System:
         1) Phase A: Black.
         2) Phase B: Red.
         3) Neutral/Grounded: White.
      b. Equipment Ground, All Systems: Green.
      c. For modifications or additions to existing wiring systems, comply with existing color code when existing code complies with NFPA 70 and is approved by the authority having jurisdiction.
      d. For control circuits, comply with manufacturer's recommended color code.

2.03 SINGLE CONDUCTOR BUILDING WIRE

A. Description: Single conductor insulated wire.

B. Conductor Stranding:
   1. Feeders and Branch Circuits:
      a. Size 10 AWG and Smaller: Solid.
      b. Size 8 AWG and Larger: Stranded.

C. Insulation Voltage Rating: 600 V.

D. Insulation:
   1. Copper Building Wire: Type THHN/THWN or THHN/THWN-2, except as indicated below.
      a. Size 4 AWG and Larger: Type XHHW-2.
      b. Installed Underground: Type XHHW-2.

2.04 SERVICE ENTRANCE CABLE

A. Service Entrance Cable for Above-Ground Use: NFPA 70, Type SE multiple-conductor cable listed and labeled as complying with UL 854, Style R.

B. Service Entrance Cable for Underground Use: NFPA 70, Type USE single-conductor cable listed and labeled as complying with UL 854, Type USE-2, and with UL 44 Type RHH/RHW-2.

C. Conductor Stranding: Stranded.

D. Insulation Voltage Rating: 600 V.

2.05 ARMORED CABLE

A. Description: NFPA 70, Type AC cable listed and labeled as complying with UL 4, and listed for use in classified firestop systems to be used.

B. Conductor Stranding:
   1. Size 10 AWG and Smaller: Solid.
   2. Size 8 AWG and Larger: Stranded.

C. Insulation Voltage Rating: 600 V.

D. Insulation: Type THHN.

E. Grounding: Combination of interlocking armor and integral bonding wire.
   1. Provide additional full-size integral insulated equipment grounding conductor for redundant grounding, suitable for general purpose, non-essential electrical systems in non-hazardous patient care areas of health care facilities.

F. Armor: Steel, interlocked tape.

2.06 METAL-CLAD CABLE

A. Description: NFPA 70, Type MC cable listed and labeled as complying with UL 1569, and listed for use in classified firestop systems to be used.

B. Conductor Stranding:
   1. Size 10 AWG and Smaller: Solid.
   2. Size 8 AWG and Larger: Stranded.

C. Insulation Voltage Rating: 600 V.

D. Insulation: Type THHN, THHN/THWN, or THHN/THWN-2.

E. Grounding: Full-size integral equipment grounding conductor.

F. Armor: Steel, interlocked tape.

G. Provide PVC jacket applied over cable armor where indicated or required for environment of installed location.

2.07 POWER AND CONTROL TRAY CABLE

A. Description: NFPA 70, Type TC cable listed and labeled as complying with UL 1277.

B. Conductor Stranding: Stranded.

C. Insulation Voltage Rating: 600 V.

D. Insulation: Type XHHW or XHHW-2.

E. Grounding: Full-size integral equipment grounding conductor.

F. Jacket: PVC or Chlorinated Polyethylene (CPE).

2.08 WIRING CONNECTORS

A. Description: Wiring connectors appropriate for the application, suitable for use with the conductors to be connected, and listed as complying with UL 486A-486B or UL 486C as applicable.

B. Connectors for Grounding and Bonding: Comply with Section 26 0526.

C. Wiring Connectors for Splices and Taps:
   1. Copper Conductors Size 8 AWG and Smaller: Use twist-on insulated spring connectors or compression connectors.
   2. Copper Conductors Size 6 AWG and Larger: Use mechanical connectors or compression connectors.

D. Wiring Connectors for Terminations:
   1. Provide terminal lugs for connecting conductors to equipment furnished with terminations designed for terminal lugs.
   2. Provide compression adapters for connecting conductors to equipment furnished with mechanical lugs when only compression connectors are specified.
   3. Where over-sized conductors are larger than the equipment terminations can accommodate, provide connectors suitable for reducing to appropriate size, but not less than required for the rating of the overcurrent protective device.
   4. Provide motor pigtail connectors for connecting motor leads in order to facilitate disconnection.
   5. Copper Conductors Size 8 AWG and Larger: Use mechanical connectors or compression connectors where connectors are required.

E. Do not use insulation-piercing or insulation-displacement connectors designed for use with conductors without stripping insulation.

F. Do not use push-in wire connectors as a substitute for twist-on insulated spring connectors.

G. Twist-on Insulated Spring Connectors: Rated 600 V, 221 degrees F for standard applications and 302 degrees F for high temperature applications; pre-filled with sealant and listed as complying with UL

486D for damp and wet locations.

H. Mechanical Connectors: Provide bolted type.

I. Compression Connectors: Provide circumferential type or hex type crimp configuration.

2.09 ACCESSORIES

A. Electrical Tape:
   1. Vinyl Color Coding Electrical Tape: Integrally colored to match color code indicated; listed as complying with UL 510; minimum thickness of 7 mil; resistant to abrasion, corrosion, and sunlight; suitable for continuous temperature environment up to 221 degrees F.
   2. Vinyl Insulating Electrical Tape: Complying with ASTM D3005 and listed as complying with UL 510; minimum thickness of 7 mil; resistant to abrasion, corrosion, and sunlight; conformable for application down to 0 degrees F and suitable for continuous temperature environment up to 221 degrees F.
   3. Rubber Splicing Electrical Tape: Ethylene Propylene Rubber (EPR) tape, complying with ASTM D4388; minimum thickness of 30 mil; suitable for continuous temperature environment up to 194 degrees F and short-term 266 degrees F overload service.
   4. Electrical Filler Tape: Rubber-based insulating moldable putty, minimum thickness of 125 mil; suitable for continuous temperature environment up to 176 degrees F.
   5. Varnished Cambric Electrical Tape: Cotton cambric fabric tape, with or without adhesive, oil-primed and coated with high-grade insulating varnish; minimum thickness of 7 mil; suitable for continuous temperature environment up to 221 degrees F.
   6. Moisture Sealing Electrical Tape: Insulating mastic compound laminated to flexible, all-weather vinyl backing; minimum thickness of 90 mil.

B. Heat Shrink Tubing: Heavy-wall, split-resistant, with factory-applied adhesive; rated 600 V; suitable for direct burial applications; listed as complying with UL 486D.

C. Wire Pulling Lubricant:
   1. Listed and labeled as complying with UL 267.
   2. Suitable for use with conductors/cables and associated insulation/jackets to be installed.
   3. Suitable for use at installation temperature.

D. Cable Ties: Material and tensile strength rating suitable for application.

E. Sealing Systems for Roof Penetrations: Premanufactured components and accessories as required to preserve integrity of roofing system and maintain roof warranty; suitable for cables and roofing system to be installed; designed to accommodate existing penetrations where applicable.

F. Firestop Sleeves: Listed; provide as required to preserve fire resistance rating of building elements.

PART 3 EXECUTION

3.01 EXAMINATION

A. Verify that interior of building has been protected from weather.

B. Verify that work likely to damage wire and cable has been completed.

C. Verify that raceways, boxes, and equipment enclosures are installed and are properly sized to accommodate conductors and cables in accordance with NFPA 70.

D. Verify that field measurements are as indicated.

E. Verify that conditions are satisfactory for installation prior to starting work.

3.02 PREPARATION

A. Clean raceways thoroughly to remove foreign materials before installing conductors and cables.

3.03 INSTALLATION

A. Circuiting Requirements:
   1. Unless dimensioned, circuit routing indicated is diagrammatic.
   2. Arrange circuiting to minimize splices.
   3. Maintain separation of Class 1, Class 2, and Class 3 remote-control, signaling, and power-limited circuits in accordance with NFPA 70.
   4. Maintain separation of wiring for emergency systems in accordance with NFPA 70.
   5. Circuiting Adjustments: Unless otherwise indicated, when branch circuits are indicated as separate, combining them together in a single raceway is permitted, under the following conditions:
      a. Provide no more than four current-carrying conductors in a single raceway. Dedicated neutral conductors are considered current-carrying conductors.
      b. Increase size of conductors as required to account for ampacity derating.
      c. Size raceways, boxes, etc. to accommodate conductors.
   6. Common Neutrals: Unless otherwise indicated, sharing of neutral/grounded conductors among single phase branch circuits of different phases installed in the same raceway is not permitted. Provide dedicated neutral/grounded conductor for each individual branch circuit.

B. Install products in accordance with manufacturer's instructions.

C. Perform work in accordance with NECA 1 (general workmanship).

D. Install armored cable (Type AC) in accordance with NECA 120.

E. Install metal-clad cable (Type MC) in accordance with NECA 120.

F. Installation in Raceway:
   1. Tape ends of conductors and cables to prevent infiltration of moisture and other contaminants.
   2. Pull all conductors and cables together into raceway at same time.
   3. Do not damage conductors and cables or exceed manufacturer's recommended maximum pulling tension and sidewall pressure.
   4. Use suitable wire pulling lubricant where necessary, except when lubricant is not recommended by the manufacturer.

G. Exposed Cable Installation (only where specifically permitted):
   1. Route cables parallel or perpendicular to building structural members and surfaces.
   2. Protect cables from physical damage.

H. Paralleled Conductors: Install conductors of the same length and terminate in the same manner.

I. Secure and support conductors and cables in accordance with NFPA 70 using suitable supports and methods approved by the authority having jurisdiction. Provide independent support from building structure. Do not provide support from raceways, piping, ductwork, or other systems.
   1. Installation Above Suspended Ceilings: Do not provide support from ceiling support system. Do not provide support from ceiling grid or allow conductors and cables to lay on ceiling tiles.
   2. Installation in Vertical Raceways: Provide supports where vertical rise exceeds permissible limits.

J. Terminate cables using suitable fittings.
   1. Armored Cable (Type AC):
      a. Use listed fittings and anti-short, insulating bushings.
      b. Cut cable armor only using specialized tools to prevent damaging conductors or insulation. Do not use hacksaw or wire cutters to cut armor.
   2. Metal-Clad Cable (Type MC):
      a. Use listed fittings.
      b. Cut cable armor only using specialized tools to prevent damaging conductors or insulation. Do not use hacksaw or wire cutters to cut armor.

K. Install conductors with a minimum of 12 inches of slack at each outlet.

L. Where conductors are installed in enclosures for future termination by others, provide a minimum of 5 feet of slack.

M. Neatly train and bundle conductors inside boxes, wireways, panelboards and other equipment enclosures.

N. Group or otherwise identify neutral/grounded conductors with associated ungrounded conductors inside enclosures in accordance with NFPA 70.

O. Make wiring connections using specified wiring connectors.
   1. Make splices and taps only in accessible boxes. Do not pull splices into raceways or make splices in conduit bodies or wiring gutters.
   2. Remove appropriate amount of conductor insulation for making connections without cutting, nicking or damaging conductors.
   3. Do not remove conductor strands to facilitate insertion into connector.
   4. Clean contact surfaces on conductors and connectors to suitable remove corrosion, oxides, and other contaminates. Do not use wire brush on plated connector surfaces.
   5. Mechanical Connectors: Secure connections according to manufacturer's recommended torque settings.
   6. Compression Connectors: Secure connections using manufacturer's recommended tools and dies.

P. Insulate splices and taps that are made with uninsulated connectors using methods suitable for the application, with insulation and mechanical strength at least equivalent to unspliced conductors.
   1. Dry Locations: Use insulating covers specifically designed for the connectors, electrical tape, or heat shrink tubing.
      a. For taped connections, first apply adequate amount of rubber splicing electrical tape or electrical filler tape, followed by outer covering of vinyl insulating electrical tape.
      b. For taped connections likely to require re-entering, including motor leads, first apply varnished cambric electrical tape, followed by adequate amount of rubber splicing electrical tape, followed by outer covering of vinyl insulating electrical tape.
   2. Damp Locations: Use insulating covers specifically designed for the connectors, electrical tape, or heat shrink tubing.
      a. For connections with insulating covers, apply outer covering of moisture sealing electrical tape.
      b. For taped connections, follow same procedure as for dry locations but apply outer covering of moisture sealing electrical tape.
   3. Wet Locations: Use heat shrink tubing.

Q. Insulate ends of spare conductors using vinyl insulating electrical tape.

R. Identify conductors and cables in accordance with Section 26 0553.

S. Install firestopping to preserve fire resistance rating of partitions and other elements, using materials and methods specified in Section 07 8400.

T. Unless specifically indicated to be excluded, provide final connections to all equipment and devices, including those furnished by others, as required for a complete operating system.

3.04 FIELD QUALITY CONTROL

A. Inspect and test in accordance with NETA ATS, except Section 4.

B. Perform inspections and tests listed in NETA ATS, Section 7.3.2. The insulation resistance test is only required for conductors larger than #12 AWG. The resistance test for parallel conductors listed as optional is required.
   1. Disconnect surge protective devices (SPDs) prior to performing any high potential testing. Replace SPDs damaged by performing high potential testing with SPDs connected.

C. Correct deficiencies and replace damaged or defective conductors and cables.

END OF SECTION

SECTION 26 0526
GROUNDING AND BONDING FOR ELECTRICAL SYSTEMS

PART 1 GENERAL

1.01 SECTION INCLUDES

A. Grounding and bonding requirements.

B. Conductors for grounding and bonding.

C. Connectors for grounding and bonding.

D. Ground bars.

E. Ground rod electrodes.

F. Ground access wells.

1.02 RELATED REQUIREMENTS

A. Section 26 0519 - Low-Voltage Electrical Power Conductors and Cables: Additional requirements for conductors for grounding and bonding, including conductor color coding.
   1. Includes oxide inhibiting compound.

B. Section 26 0553 - Identification for Electrical Systems: Identification products and requirements.

C. Section 26 5600 - Exterior Lighting: Additional grounding and bonding requirements for pole-mounted luminaires.

1.03 REFERENCE STANDARDS

A. IEEE 81 - IEEE Guide for Measuring Earth Resistivity, Ground Impedance, and Earth Surface Potentials of a Grounding System 2012.

B. NECA 1 - Standard for Good Workmanship in Electrical Construction 2015.

C. NEMA GR 1 - Grounding Rod Electrodes and Grounding Rod Electrode Couplings 2017.

D. NETA ATS - Standard For Acceptance Testing Specifications For Electrical Power Equipment And Systems 2021.

E. NFPA 70 - National Electrical Code Most Recent Edition Adopted by Authority Having Jurisdiction, Including All Applicable Amendments and Supplements.

F. NFPA 99 - Health Care Facilities Code 2021, with Amendment.

G. UL 467 - Grounding and Bonding Equipment Current Edition, Including All Revisions.

1.04 SUBMITTALS

A. Product Data: Provide manufacturer's standard catalog pages and data sheets for grounding and bonding system components.

1.05 QUALITY ASSURANCE

A. Comply with requirements of NFPA 70.

B. Manufacturer Qualifications: Company specializing in manufacturing the products specified in this section with minimum three years documented experience.

C. Product Listing Organization Qualifications: An organization recognized by OSHA as a Nationally Recognized Testing Laboratory (NRTL) and acceptable to authorities having jurisdiction.

1.06 DELIVERY, STORAGE, AND HANDLING

A. Receive, inspect, handle, and store products in accordance with manufacturer's instructions.

PART 2 PRODUCTS

2.01 GROUNDING AND BONDING REQUIREMENTS

A. Existing Work: Where existing grounding and bonding system components are indicated to be reused, they may be reused only where they are free from corrosion, integrity and continuity are verified, and where acceptable to the authority having jurisdiction.

B. Do not use products for applications other than as permitted by NFPA 70 and product listing.

C. Unless specifically indicated to be excluded, provide all required components, conductors, connectors, conduit, boxes, fittings, supports, accessories, etc. as necessary for a complete grounding and bonding system.

D. Where conductor size is not indicated, size to comply with NFPA 70 but not less than applicable minimum size requirements specified.

E. Grounding System Resistance:
   1. Achieve specified grounding system resistance under normally dry conditions unless otherwise approved by Architect. Precipitation within the previous 48 hours does not constitute normally dry conditions.
   2. Grounding Electrode System: Not greater than 5 ohms to ground, when tested according to IEEE 81 using "fall-of-potential" method.
   3. Between Grounding Electrode System and Major Electrical Equipment Frames, System Neutral, and Derived Neutral Points: Not greater than 0.5 ohms, when tested using "point-to-point" methods.

F. Grounding Electrode System:
   1. Provide connection to required and supplemental grounding electrodes indicated to form grounding electrode system.
      a. Provide continuous grounding electrode conductors without splice or joint.
      b. Install grounding electrode conductors in raceway where exposed to physical damage. Bond grounding electrode conductor to metallic raceways at each end with bonding jumper.
   2. Metal Underground Water Pipe(s):
      a. Provide connection to underground metal domestic and fire protection (where present) water service pipe(s) that are in direct contact with earth for at least 10 feet at an accessible location not more than 5 feet from the point of entrance to the building.
      b. Provide bonding jumper(s) around insulating joints/pipes as required to make pipe electrically continuous.
      c. Provide bonding jumper around water meter of sufficient length to permit removal of meter without disconnecting jumper.
   3. Ground Rod Electrode(s):
      a. Space electrodes not less than 10 feet from each other and any other ground electrode.
      b. Where location is not indicated, locate electrode(s) at least 5 feet outside building perimeter foundation as near as possible to electrical service entrance; where possible, locate in softscape (uncovered) area.
      c. Provide ground access well for first connected electrode.
   4. Provide additional ground electrode(s) as required to achieve specified grounding electrode system resistance.
   5. Ground Bar: Provide ground bar, separate from service equipment enclosure, for common connection point of grounding electrode system bonding jumpers as permitted in NFPA 70. Connect grounding electrode conductor provided for service-supplied system grounding to this ground bar.
      a. Ground Bar Size: 1/4 by 2 by 12 inches unless otherwise indicated or required.

b. Where ground bar location is not indicated, locate in accessible location as near as possible to service disconnect enclosure.
c. Ground Bar Mounting Height: 18 inches above finished floor unless otherwise indicated.

G. Service-Supplied System Grounding:
1. For each service disconnect, provide grounding electrode conductor to connect neutral (grounded) service conductor to grounding electrode system. Unless otherwise indicated, make connection at neutral (grounded) bus in service disconnect enclosure.
2. For each service disconnect, provide main bonding jumper to connect neutral (grounded) bus to equipment ground bus where not factory-installed. Do not make any other connections between neutral (grounded) conductors and ground on load side of service disconnect.

H. Grounding for Separate Building or Structure Supplied by Feeder(s) or Branch Circuits:
1. Provide grounding electrode system for each separate building or structure.
2. Provide equipment grounding conductor routed with supply conductors.
3. For each disconnecting means, provide grounding electrode conductor to connect equipment ground bus to grounding electrode system.
4. Do not make any connections and remove any factory-installed jumpers between neutral (grounded) conductors and ground.

I. Separately Derived System Grounding:
1. Separately derived systems include, but are not limited to:
a. Transformers (except autotransformers such as buck-boost transformers).
b. Uninterruptible power supplies (UPS), when configured as separately derived systems.
c. Generators, when neutral is switched in the transfer switch.
2. Provide grounding electrode conductor to connect derived system grounded conductor to nearest effectively grounded metal building frame. Unless otherwise indicated, make connection at neutral (grounded) bus in source enclosure.
3. Provide bonding jumper to connect derived system grounded conductor to nearest metal building frame and nearest metal water piping in the area served by the derived system, where not already used as a grounding electrode for the derived system. Make connection at same location as grounding electrode conductor connection.
4. Outdoor Source: Where the source of the separately derived system is located outside the building or structure supplied, provide connection to grounding electrode at source in accordance with NFPA 70.
5. Provide system bonding jumper to connect system grounded conductor to equipment ground bus. Make connection at same location as grounding electrode conductor connection. Do not make any other connections between neutral (grounded) conductors and ground on load side of separately derived system disconnect.
6. Where the source and first disconnecting means are in separate enclosures, provide supply-side bonding jumper between source and first disconnecting means.

J. Bonding and Equipment Grounding:
1. Provide bonding for equipment grounding conductors, equipment ground busses, metallic equipment enclosures, metallic raceways and boxes, device grounding terminals, and other normally non-current-carrying conductive materials enclosing electrical conductors/equipment or likely to become energized as indicated and in accordance with NFPA 70.
2. Provide insulated equipment grounding conductor in each feeder and branch circuit raceway. Do not use raceways as sole equipment grounding conductor.
3. Where circuit conductor sizes are increased for voltage drop, increase size of equipment grounding conductor proportionally in accordance with NFPA 70.
4. Unless otherwise indicated, connect wiring device grounding terminal to branch circuit equipment grounding conductor and to outlet box with bonding jumper.

5. Terminate branch circuit equipment grounding conductors on solidly bonded equipment ground bus only. Do not terminate on neutral (grounded) or isolated/insulated ground bus.
6. Provide bonding jumper across expansion or expansion/deflection fittings provided to accommodate conduit movement.
7. Provide bonding for interior metal piping systems in accordance with NFPA 70. This includes, but is not limited to:
   a. Metal water piping where not already effectively bonded to metal underground water pipe used as grounding electrode.
   b. Metal gas piping.
8. Provide bonding for interior metal air ducts.
9. Provide bonding for metal building frame.
10. Provide bonding for metal siding not effectively bonded through attachment to metal building frame.
11. Provide redundant grounding and bonding for patient care areas of health care facilities in accordance with NFPA 70 and NFPA 99.

K. Communications Systems Grounding and Bonding:
1. Provide intersystem bonding termination at service equipment or metering equipment enclosure and at disconnecting means for any additional buildings or structures in accordance with NFPA 70.
2. Provide bonding jumper in raceway from intersystem bonding termination to each communications room or backboard and provide ground bar for termination.
   a. Bonding Jumper Size: 6 AWG, unless otherwise indicated or required.
   b. Raceway Size: 3/4 inch trade size unless otherwise indicated or required.
   c. Ground Bar Size: 1/4 by 2 by 12 inches unless otherwise indicated or required.
   d. Ground Bar Mounting Height: 18 inches above finished floor unless otherwise indicated.

L. Pole-Mounted Luminaires: Also comply with Section 26 5600.

2.02 GROUNDING AND BONDING COMPONENTS

A. General Requirements:
1. Provide products listed, classified, and labeled as suitable for the purpose intended.
2. Provide products listed and labeled as complying with UL 467 where applicable.

B. Conductors for Grounding and Bonding, in Addition to Requirements of Section 26 0526:
1. Use insulated copper conductors unless otherwise indicated.
   a. Exceptions:
      1) Use bare copper conductors where installed underground in direct contact with earth.
      2) Use bare copper conductors where directly encased in concrete (not in raceway).

C. Connectors for Grounding and Bonding:
1. Description: Connectors appropriate for the application and suitable for the conductors and items to be connected; listed and labeled as complying with UL 467.
2. Unless otherwise indicated, use exothermic welded connections for underground, concealed and other inaccessible connections.
3. Unless otherwise indicated, use mechanical connectors or exothermic welded connections for accessible connections.

D. Ground Bars:
1. Description: Copper rectangular ground bars with mounting brackets and insulators.
2. Size: As indicated.
3. Holes for Connections: As indicated or as required for connections to be made.

E. Ground Rod Electrodes:
1. Comply with NEMA GR 1.
2. Material: Copper-bonded (copper-clad) steel.

3. Size: 3/4 inch diameter by 10 feet length, unless otherwise indicated.

F. Ground Access Wells:
1. Description: Open bottom round or rectangular well with access cover for testing and inspection; suitable for the expected load at the installed location.
a. Areas Exposed to Vehicular Traffic: Rated for not less than 22500 pounds vertical design load.
2. Size: As required to provide adequate access for testing and inspection, but not less than minimum size requirements specified.
a. Round Wells: Not less than 8 inches in diameter.
b. Rectangular Wells: Not less than 12 by 12 inches.
3. Depth: As required to extend below frost line to prevent frost upheaval, but not less than 10 inches.
4. Cover: Factory-identified by permanent means with word "GROUND".

G. Oxide Inhibiting Compound: Comply with Section 26 0519.

PART 3 EXECUTION

3.01 EXAMINATION

A. Verify that work likely to damage grounding and bonding system components has been completed.

B. Verify that field measurements are as indicated.

C. Verify that conditions are satisfactory for installation prior to starting work.

3.02 INSTALLATION

A. Install products in accordance with manufacturer's instructions.

B. Perform work in accordance with NECA 1 (general workmanship).

C. Ground Rod Electrodes: Unless otherwise indicated, install ground rod electrodes vertically. Where encountered rock prohibits vertical installation, install at 45 degree angle or bury horizontally in trench at least 30 inches (750 mm) deep in accordance with NFPA 70 or provide ground plates.
1. Outdoor Installations: Unless otherwise indicated, install with top of rod 6 inches below finished grade.

D. Make grounding and bonding connections using specified connectors.
1. Remove appropriate amount of conductor insulation for making connections without cutting, nicking or damaging conductors. Do not remove conductor strands to facilitate insertion into connector.
2. Remove nonconductive paint, enamel, or similar coating at threads, contact points, and contact surfaces.
3. Exothermic Welds: Make connections using molds and weld material suitable for the items to be connected in accordance with manufacturer's recommendations.
4. Mechanical Connectors: Secure connections according to manufacturer's recommended torque settings.
5. Compression Connectors: Secure connections using manufacturer's recommended tools and dies.

E. Identify grounding and bonding system components in accordance with Section 26 0553.

3.03 FIELD QUALITY CONTROL

A. Inspect and test in accordance with NETA ATS except Section 4.

B. Perform inspections and tests listed in NETA ATS, Section 7.13.

C. Perform ground electrode resistance tests under normally dry conditions. Precipitation within the previous 48 hours does not constitute normally dry conditions.

D. Investigate and correct deficiencies where measured ground resistances do not comply with specified requirements.

END OF SECTION

SECTION 26 0529
HANGERS AND SUPPORTS FOR ELECTRICAL SYSTEMS

PART 1 GENERAL

1.01 SECTION INCLUDES

A. Support and attachment requirements and components for equipment, conduit, cable, boxes, and other electrical work.

1.02 RELATED REQUIREMENTS

A. Section 03 3000 - Cast-in-Place Concrete: Concrete equipment pads.

B. Section 26 0533.13 - Conduit for Electrical Systems: Additional support and attachment requirements for conduits.

C. Section 26 0533.16 - Boxes for Electrical Systems: Additional support and attachment requirements for boxes.

D. Section 26 0548 - Vibration and Seismic Controls for Electrical Systems.

E. Section 26 5100 - Interior Lighting: Additional support and attachment requirements for interior luminaires.

F. Section 26 5600 - Exterior Lighting: Additional support and attachment requirements for exterior luminaires.

1.03 REFERENCE STANDARDS

A. ASTM A123/A123M - Standard Specification for Zinc (Hot-Dip Galvanized) Coatings on Iron and Steel Products 2017.

B. ASTM A153/A153M - Standard Specification for Zinc Coating (Hot-Dip) on Iron and Steel Hardware 2016a.

C. ASTM B633 - Standard Specification for Electrodeposited Coatings of Zinc on Iron and Steel 2019.

D. MFMA-4 - Metal Framing Standards Publication 2004.

E. NECA 1 - Standard for Good Workmanship in Electrical Construction 2015.

F. NFPA 70 - National Electrical Code Most Recent Edition Adopted by Authority Having Jurisdiction, Including All Applicable Amendments and Supplements.

G. NFPA 101 - Life Safety Code Most Recent Edition Adopted by Authority Having Jurisdiction, Including All Applicable Amendments and Supplements.

1.04 ADMINISTRATIVE REQUIREMENTS

A. Coordination:
   1. Coordinate sizes and arrangement of supports and bases with actual equipment and components to be installed.
   2. Coordinate work to provide additional framing and materials required for installation.
   3. Coordinate compatibility of support and attachment components with mounting surfaces at installed locations.
   4. Coordinate arrangement of supports with ductwork, piping, equipment and other potential conflicts.
   5. Notify Architect of conflicts with or deviations from Contract Documents. Obtain direction before proceeding with work.

B. Sequencing:
   1. Do not install products on or provide attachment to concrete surfaces until concrete has cured; see Section 03 3000.

1.05 SUBMITTALS

A. Product Data: Provide manufacturer's standard catalog pages and data sheets for channel/strut framing systems, nonpenetrating rooftop supports, and post-installed concrete/masonry anchors.

B. Shop Drawings: Include details for fabricated hangers and supports where materials or methods other than those indicated are proposed for substitution.

1.06 QUALITY ASSURANCE

1.07 DELIVERY, STORAGE, AND HANDLING

A. Receive, inspect, handle, and store products in accordance with manufacturer's instructions.

PART 2 PRODUCTS

2.01 SUPPORT AND ATTACHMENT COMPONENTS

A. General Requirements:
   1. Comply with the following. Where requirements differ, comply with most stringent.
      a. NFPA 70.
      b. Requirements of authorities having jurisdiction.
   2. Provide required hangers, supports, anchors, fasteners, fittings, accessories, and hardware as necessary for complete installation of electrical work.
   3. Provide products listed, classified, and labeled as suitable for purpose intended, where applicable.
   4. Do not use products for applications other than as permitted by NFPA 70 and product listing.
   5. Steel Components: Use corrosion-resistant materials suitable for environment where installed.
      a. Outdoor and Damp or Wet Indoor Locations: Use stainless steel or approved equivalent unless otherwise indicated.
      b. Zinc-Plated Steel: Electroplated in accordance with ASTM B633.
      c. Galvanized Steel: Hot-dip galvanized after fabrication in accordance with ASTM A123/A123M or ASTM A153/A153M.

B. Components for Vibration Isolation and/or Seismic Controls: See Section 26 0548.

C. Conduit and Cable Supports: Straps and clamps suitable for conduit or cable to be supported.
   1. Conduit Straps: One-hole or two-hole type; steel or malleable iron.
   2. Conduit Clamps: Bolted type unless otherwise indicated.

D. Outlet Box Supports: Hangers and brackets suitable for boxes to be supported.

E. Metal Channel/Strut Framing Systems:
   1. Description: Factory-fabricated, continuous-slot, metal channel/strut and associated fittings, accessories, and hardware required for field assembly of supports.
   2. Comply with MFMA-4.

F. Hanger Rods: Threaded, zinc-plated steel unless otherwise indicated.
   1. Minimum Size, Unless Otherwise Indicated or Required:
      a. Equipment Supports: 1/2-inch diameter.
      b. Busway Supports: 1/2-inch diameter.
      c. Single Conduit up to 1-inch (27 mm) Trade Size: 1/4-inch diameter.
      d. Single Conduit Larger than 1-inch (27 mm) Trade Size: 3/8-inch diameter.
      e. Trapeze Support for Multiple Conduits: 3/8-inch diameter.
      f. Outlet Boxes: 1/4-inch diameter.
      g. Luminaires: 1/4-inch diameter.

G. Nonpenetrating Rooftop Supports for Low-Slope Roofs:
   1. Description: Steel pedestals with thermoplastic or rubber bases that rest on top of roofing membrane, not requiring attachment to roof structure and not penetrating roofing assembly, with support fixtures as specified.

2. Base Sizes: As required to distribute load sufficiently to prevent indentation of roofing assembly.
3. Attachment/Support Fixtures: As recommended by manufacturer, same type as indicated for equivalent indoor hangers and supports.
4. Mounting Height: Provide minimum clearance of 6 inches under supported component to top of roofing.

H. Anchors and Fasteners:
1. Unless otherwise indicated and where not otherwise restricted, use anchor and fastener types indicated for specified applications.
2. Concrete: Use preset concrete inserts or expansion anchors.
3. Solid or Grout-Filled Masonry: Use expansion anchors or screw anchors.
4. Hollow Masonry: Use toggle bolts.
5. Hollow Stud Walls: Use toggle bolts.
6. Steel: Use beam clamps, machine bolts, or welded threaded studs.
7. Sheet Metal: Use sheet metal screws.
8. Wood: Use wood screws.
9. Plastic and lead anchors are not permitted.
10. Hammer-driven anchors and fasteners are not permitted.
11. Preset Concrete Inserts: Continuous metal channel/strut and spot inserts specifically designed to be cast in concrete ceilings, walls, and floors.
    a. Manufacturer: Same as manufacturer of metal channel/strut framing system.
    b. Comply with MFMA-4.
    c. Channel Material: Use galvanized steel.
12. Post-Installed Concrete and Masonry Anchors: Evaluated and recognized by ICC Evaluation Service, LLC (ICC-ES) for compliance with applicable building code.

PART 3 EXECUTION

3.01 EXAMINATION

A. Verify that field measurements are as indicated.

B. Verify that mounting surfaces are ready to receive support and attachment components.

C. Verify that conditions are satisfactory for installation prior to starting work.

3.02 INSTALLATION

A. Install products in accordance with manufacturer's instructions.

B. Install hangers and supports in accordance with NECA 1.

C. Install anchors and fasteners in accordance with ICC Evaluation Services, LLC (ICC-ES) evaluation report conditions of use where applicable.

D. Provide independent support from building structure. Do not provide support from piping, ductwork, or other systems.

E. Unless specifically indicated or approved by Architect, do not provide support from suspended ceiling support system or ceiling grid.

F. Unless specifically indicated or approved by Architect, do not provide support from roof deck.

G. Do not penetrate or otherwise notch or cut structural members without approval of Structural Engineer.

H. Provide required vibration isolation and/or seismic controls; see Section 26 0548.

I. Equipment Support and Attachment:
1. Use metal, fabricated supports or supports assembled from metal channel/strut to support equipment as required.

2. Use metal channel/strut to support surface-mounted equipment in wet or damp locations to provide space between equipment and mounting surface.
3. Securely fasten floor-mounted equipment. Do not install equipment such that it relies on its own weight for support.

J. Conduit Support and Attachment: See Section 26 0533.13 for additional requirements.

K. Box Support and Attachment: See Section 26 0533.16 for additional requirements.

L. Interior Luminaire Support and Attachment: See Section 26 5100 for additional requirements.

M. Exterior Luminaire Support and Attachment: See Section 26 5600 for additional requirements.

N. Preset Concrete Inserts: Use manufacturer provided closure strips to inhibit concrete seepage during concrete pour.

O. Secure fasteners in accordance with manufacturer's recommended torque settings.

P. Remove temporary supports.

Q. Identify independent electrical component support wires above accessible ceilings, where permitted, with color distinguishable from ceiling support wires in accordance with NFPA 70.

3.03 FIELD QUALITY CONTROL

A. Inspect support and attachment components for damage and defects.

B. Repair cuts and abrasions in galvanized finishes using zinc-rich paint recommended by manufacturer. Replace components that exhibit signs of corrosion.

C. Correct deficiencies and replace damaged or defective support and attachment components.

END OF SECTION

SECTION 26 0533.13
CONDUIT FOR ELECTRICAL SYSTEMS

PART 1 GENERAL

1.01 SECTION INCLUDES

A. Galvanized steel rigid metal conduit (RMC).

B. Stainless steel rigid metal conduit (RMC).

C. Aluminum rigid metal conduit (RMC).

D. Galvanized steel intermediate metal conduit (IMC).

E. Stainless steel intermediate metal conduit (IMC).

F. PVC-coated galvanized steel rigid metal conduit (RMC).

G. Flexible metal conduit (FMC).

H. Liquidtight flexible metal conduit (LFMC).

I. Galvanized steel electrical metallic tubing (EMT).

J. Stainless steel electrical metallic tubing (EMT).

K. Rigid polyvinyl chloride (PVC) conduit.

L. Reinforced thermosetting resin conduit (RTRC).

1.02 RELATED REQUIREMENTS

A. Section 03 3000 - Cast-in-Place Concrete: Concrete encasement of conduits.

B. Section 07 8400 - Firestopping.

C. Section 26 0519 - Low-Voltage Electrical Power Conductors and Cables: Cable assemblies consisting of conductors protected by integral metal armor.

D. Section 26 0526 - Grounding and Bonding for Electrical Systems.
   1. Includes additional requirements for fittings for grounding and bonding.

E. Section 26 0529 - Hangers and Supports for Electrical Systems.

F. Section 26 0533.16 - Boxes for Electrical Systems.

G. Section 26 0548 - Vibration and Seismic Controls for Electrical Systems.

H. Section 26 0553 - Identification for Electrical Systems: Identification products and requirements.

I. Section 26 2100 - Low-Voltage Electrical Service Entrance: Additional requirements for electrical service conduits.

1.03 REFERENCE STANDARDS

A. ANSI C80.1 - American National Standard for Electrical Rigid Steel Conduit (ERSC) 2020.

B. ANSI C80.3 - American National Standard for Electrical Metallic Tubing -- Steel (EMT-S) 2020.

C. ANSI C80.5 - American National Standard for Electrical Rigid Metal Conduit -- Aluminum (ERMC-A) 2020.

D. ANSI C80.6 - American National Standard for Electrical Intermediate Metal Conduit 2018.

E. NECA 1 - Standard for Good Workmanship in Electrical Construction 2015.

F. NECA 101 - Standard for Installing Steel Conduits (Rigid, IMC, EMT) 2020.

G. NECA 102 - Standard for Installing Aluminum Rigid Metal Conduit 2004.

H. NECA 111 - Standard for Installing Nonmetallic Raceways (RNC, ENT, LFNC) 2017.

I. NEMA FB 1 - Fittings, Cast Metal Boxes, and Conduit Bodies for Conduit, Electrical Metallic Tubing, and Cable 2014.

J. NEMA RN 1 - Polyvinyl-Chloride (PVC) Externally Coated Galvanized Rigid Steel Metal Conduit and Intermediate Metal Conduit 2018.

K. NEMA TC 2 - Electrical Polyvinyl Chloride (PVC) Conduit 2020.

L. NEMA TC 3 - Polyvinyl Chloride (PVC) Fittings for Use with Rigid PVC Conduit and Tubing 2021.

M. NEMA TC 14 (SERIES) - Reinforced Thermosetting Resin Conduit and Fittings Series 2015.

N. NFPA 70 - National Electrical Code Most Recent Edition Adopted by Authority Having Jurisdiction, Including All Applicable Amendments and Supplements.

O. UL 1 - Flexible Metal Conduit Current Edition, Including All Revisions.

P. UL 6 - Electrical Rigid Metal Conduit-Steel Current Edition, Including All Revisions.

Q. UL 6A - Electrical Rigid Metal Conduit-Aluminum, Red Brass, and Stainless Steel Current Edition, Including All Revisions.

R. UL 360 - Liquid-Tight Flexible Metal Conduit Current Edition, Including All Revisions.

S. UL 514A - Metallic Outlet Boxes Current Edition, Including All Revisions.

T. UL 514B - Conduit, Tubing, and Cable Fittings Current Edition, Including All Revisions.

U. UL 651 - Schedule 40, 80, Type EB and A Rigid PVC Conduit and Fittings Current Edition, Including All Revisions.

V. UL 797 - Electrical Metallic Tubing-Steel Current Edition, Including All Revisions.

W. UL 797A - Electrical Metallic Tubing - Aluminum and Stainless Steel Current Edition, Including All Revisions.

X. UL 1203 - Explosion-Proof and Dust-Ignition-Proof Electrical Equipment for Use in Hazardous (Classified) Locations Current Edition, Including All Revisions.

Y. UL 1242 - Electrical Intermediate Metal Conduit-Steel Current Edition, Including All Revisions.

Z. UL 2419 - Outline of Investigation for Electrically Conductive Corrosion Resistant Compounds Current Edition, Including All Revisions.

1.04 ADMINISTRATIVE REQUIREMENTS

A. Coordination:
1. Coordinate minimum sizes of conduits with actual type and quantity of conductors to be installed, including adjustments for conductor sizes increased for voltage drop.
2. Coordinate arrangement of conduits with structural members, ductwork, piping, equipment, and other potential conflicts.
3. Verify exact conduit termination locations required for boxes, enclosures, and equipment.
4. Coordinate work to provide roof penetrations that preserve integrity of roofing system and do not void roof warranty.
5. Notify Architect of conflicts with or deviations from Contract Documents. Obtain direction before proceeding with work.

B. Sequencing:
1. Do not begin installation of conductors and cables until installation of conduit between termination points is complete.

1.05 SUBMITTALS

A. Product Data: Provide manufacturer's standard catalog pages and data sheets for conduits and fittings.

B. Shop Drawings:
1. Indicate proposed arrangement for conduits to be installed within structural concrete slabs, where permitted.
2. Include proposed locations of roof penetrations and proposed methods for sealing.

C. Project Record Documents: Record actual routing for conduits installed underground, conduits embedded within concrete slabs, and conduits 2-inch (53 mm) trade size and larger.

1.06 QUALITY ASSURANCE

A. Product Listing Organization Qualifications: Organization recognized by OSHA as Nationally Recognized Testing Laboratory (NRTL) and acceptable to authorities having jurisdiction.

1.07 DELIVERY, STORAGE, AND HANDLING

A. Receive, inspect, handle, and store conduit and fittings in accordance with manufacturer's instructions.

PART 2 PRODUCTS

2.01 CONDUIT APPLICATIONS

A. Do not use conduit and associated fittings for applications other than as permitted by NFPA 70, manufacturer's instructions, and product listing.

B. Unless otherwise indicated and where not otherwise restricted, use conduit types indicated for specified applications. Where more than one listed application applies, comply with most restrictive requirements. Where conduit type for particular application is not specified, use galvanized steel rigid metal conduit.

C. Underground:
   1. Under Slab on Grade: Use PVC-coated galvanized steel rigid metal conduit or rigid PVC conduit.
   2. Exterior, Direct-Buried: Use PVC-coated galvanized steel rigid metal conduit or rigid PVC conduit.
   3. Exterior, Embedded Within Concrete: Use galvanized steel rigid metal conduit, PVC-coated galvanized steel rigid metal conduit, or rigid PVC conduit.
   4. Where rigid polyvinyl (PVC) conduit is provided, transition to PVC-coated galvanized steel rigid metal conduit where emerging from underground.
   5. Where rigid polyvinyl (PVC) conduit larger than 2 inch (53 mm) trade size is provided, use galvanized steel rigid metal conduit elbows or PVC-coated galvanized steel rigid metal conduit elbows for bends.
   6. Where galvanized steel rigid metal conduit (RMC) or galvanized steel intermediate metal conduit (IMC) is installed in direct contact with earth where soil has resistivity of less than 2000 ohm-centimeters or is characterized as severely corrosive based on soils report or local experience, use corrosion protection tape, factory-applied corrosion protection coating, or field-applied corrosion protection compound acceptable to authorities having jurisdiction to provide supplementary corrosion protection.
   7. Where galvanized rigid metal conduit (RMC), galvanized steel intermediate metal conduit (IMC), or galvanized steel electrical metallic tubing (EMT) emerges from concrete into soil, use corrosion protection tape, factory-applied corrosion protection coating, or field-applied corrosion protection compound acceptable to authorities having jurisdiction to provide supplementary corrosion protection for minimum of 4 inches on either side of where conduit emerges.

D. Embedded Within Concrete:
   1. Within Slab on Grade (within structural slabs only where approved by Structural Engineer): Use galvanized steel rigid metal conduit.
   2. Within Slab Above Ground (within structural slabs only where approved by Structural Engineer): Use galvanized steel rigid metal conduit.

E. Concealed Within Masonry Walls: Use galvanized steel rigid metal conduit or electrical metallic tubing (EMT).

F. Concealed Within Hollow Stud Walls: Use galvanized steel rigid metal conduit or electrical metallic tubing (EMT).

G. Concealed Above Accessible Ceilings: Use galvanized steel rigid metal conduit or electrical metallic tubing (EMT).

H. Interior, Damp or Wet Locations: Use galvanized steel rigid metal conduit (RMC), stainless steel rigid metal conduit (RMC), galvanized steel intermediate metal conduit (IMC), stainless steel intermediate metal conduit (IMC), galvanized steel electrical metallic tubing (EMT), or stainless steel electrical metallic tubing (EMT).

I. Exposed, Interior, Not Subject to Physical Damage: Use galvanized steel rigid metal conduit or electrical metallic tubing (EMT).

J. Exposed, Interior, Subject to Physical Damage: Use galvanized steel rigid metal conduit.
   1. Locations subject to physical damage include, but are not limited to:
      a. Where exposed below 8 feet, except within electrical and communication rooms or closets.
      b. Where exposed below 20 feet in warehouse areas.
      c. Loading docks.

K. Exposed, Exterior: Use galvanized steel rigid metal conduit or PVC-coated galvanized steel rigid metal conduit.

L. Concealed, Exterior, Not Embedded in Concrete or in Contact With Earth: Use galvanized steel rigid metal conduit.

M. Corrosive Locations Above Ground: Use stainless steel rigid metal conduit (RMC), stainless steel intermediate metal conduit (IMC), PVC-coated galvanized steel rigid metal conduit (RMC), stainless steel electrical metallic tubing (EMT), or reinforced thermosetting resin conduit (RTRC).
   1. Corrosive locations include, but are not limited to:
      a. Cooling towers.

N. Flexible Connections to Vibrating Equipment:
   1. Dry Locations: Use flexible metal conduit (FMC).
   2. Damp, Wet, or Corrosive Locations: Use liquidtight flexible metal conduit (LFMC).
   3. Maximum Length: 6 feet unless otherwise indicated.
   4. Vibrating equipment includes, but is not limited to:
      a. Transformers.
      b. Motors.

2.02 CONDUIT - GENERAL REQUIREMENTS

A. Comply with NFPA 70.

B. Existing Work: Where existing conduits are indicated to be reused, they may be reused only where they comply with specified requirements, are free from corrosion, and integrity is verified by pulling mandrel through them.

C. Electrical Service Conduits: See Section 26 2100 for additional requirements.

D. Fittings for Grounding and Bonding: See Section 26 0526 for additional requirements.

E. Provide conduit, fittings, supports, and accessories required for complete raceway system.

F. Provide products listed, classified, and labeled as suitable for purpose intended.

G. Minimum Conduit Size, Unless Otherwise Indicated:
   1. Branch Circuits: 3/4 inch (21 mm) trade size.
   2. Branch Circuit Homeruns: 3/4-inch trade size.
   3. Control Circuits: 3/4 inch (21 mm) trade size.
   4. Flexible Connections to Luminaires: 3/4 inch (21 mm) trade size.
   5. Underground, Interior: 3/4-inch trade size.
   6. Underground, Exterior: 1-inch trade size.

H. Where conduit size is not indicated, size to comply with NFPA 70 but not less than applicable minimum size requirements specified.

2.03 GALVANIZED STEEL RIGID METAL CONDUIT (RMC)

A. Description: NFPA 70, Type RMC galvanized steel rigid metal conduit complying with ANSI C80.1 and listed and labeled as complying with UL 6.

B. Fittings:
   1. Nonhazardous Locations: Use fittings complying with NEMA FB 1 and listed and labeled as complying with UL 514B or UL 6.
   2. Hazardous/Classified Locations: Use fittings listed and labeled as complying with UL 1203 for classification of installed location.
   3. Material: Use steel or malleable iron.
   4. Connectors and Couplings: Use threaded type fittings only. Threadless fittings, including set screw and compression/gland types, are not permitted.

2.04 STAINLESS STEEL RIGID METAL CONDUIT (RMC)

A. Description: NFPA 70, Type RMC stainless steel rigid metal conduit complying with ANSI C80.1 and listed and labeled as complying with UL 6A.

B. Fittings:
   1. Nonhazardous Locations: Use fittings complying with NEMA FB 1 and listed and labeled as complying with UL 514B or UL 6A.
   2. Material: Use stainless steel with corrosion resistance equivalent to conduit.
   3. Connectors and Couplings: Use threaded type fittings only. Threadless fittings, including set screw and compression/gland types, are not permitted.

2.05 GALVANIZED STEEL INTERMEDIATE METAL CONDUIT (IMC)

A. Description: NFPA 70, Type IMC galvanized steel intermediate metal conduit complying with ANSI C80.6 and listed and labeled as complying with UL 1242.

B. Fittings:
   1. Nonhazardous Locations: Use fittings complying with NEMA FB 1 and listed and labeled as complying with UL 514B or UL 1242.
   2. Material: Use steel or malleable iron.
   3. Connectors and Couplings: Use threaded type fittings only. Threadless fittings, including set screw and compression/gland types, are not permitted.

2.06 STAINLESS STEEL INTERMEDIATE METAL CONDUIT (IMC)

A. Description: NFPA 70, Type IMC galvanized steel intermediate metal conduit complying with ANSI C80.6 and listed and labeled as complying with UL 1242.

B. Fittings:
   1. Nonhazardous Locations: Use fittings complying with NEMA FB 1 and listed and labeled as complying with UL 514B or UL 1242.

2.07 PVC-COATED GALVANIZED STEEL RIGID METAL CONDUIT (RMC)

A. Description: NFPA 70, Type RMC galvanized steel rigid metal conduit with external polyvinyl chloride (PVC) coating complying with NEMA RN 1 and listed and labeled as complying with UL 6.

B. Exterior Coating: Polyvinyl chloride (PVC), nominal thickness of 40 mil, 0.040 inch.

C. PVC-Coated Boxes and Fittings:
   1. Manufacturer: Same as manufacturer of PVC-coated conduit to be installed.
   2. Nonhazardous Locations: Use boxes and fittings listed and labeled as complying with UL 514A, UL 514B, or UL 6.
   3. Material: Use steel or malleable iron.
   4. Exterior Coating: Polyvinyl chloride (PVC), minimum thickness of 40 mil, 0.040 inch.

D. PVC-Coated Supports: Furnish with exterior coating of polyvinyl chloride (PVC), minimum thickness of 15 mil, 0.015 inch.

2.08 FLEXIBLE METAL CONDUIT (FMC)

A. Description: NFPA 70, Type FMC standard-wall steel flexible metal conduit listed and labeled as complying with UL 1, and listed for use in classified firestop systems.

B. Fittings:
   1. Description: Fittings complying with NEMA FB 1 and listed and labeled as complying with UL 514B.
   2. Material: Use steel or malleable iron.

2.09 LIQUIDTIGHT FLEXIBLE METAL CONDUIT (LFMC)

A. Description: NFPA 70, Type LFMC polyvinyl chloride (PVC) jacketed steel flexible metal conduit listed and labeled as complying with UL 360.

B. Fittings:
   1. Description: Fittings complying with NEMA FB 1 and listed and labeled as complying with UL 514B.
   2. Material: Use steel or malleable iron.

2.10 GALVANIZED STEEL ELECTRICAL METALLIC TUBING (EMT)

A. Description: NFPA 70, Type EMT galvanized steel electrical metallic tubing complying with ANSI C80.3 and listed and labeled as complying with UL 797.

B. Fittings:
   1. Description: Fittings complying with NEMA FB 1 and listed and labeled as complying with UL 514B.
   2. Material: Use steel or malleable iron.

2.11 STAINLESS STEEL ELECTRICAL METALLIC TUBING (EMT)

A. Description: NFPA 70, Type EMT stainless steel electrical metallic tubing complying with ANSI C80.3 and listed and labeled as complying with UL 797A.

B. Fittings:
   1. Description: Fittings complying with NEMA FB 1 and listed and labeled as complying with UL 514B.
   2. Connectors and Couplings: Use compression/gland or set-screw type.

2.12 REINFORCED THERMOSETTING RESIN CONDUIT (RTRC)

A. Description: NFPA 70, Type RTRC reinforced thermosetting resin conduit complying with NEMA TC 14 (SERIES).

B. Supports: As recommended by manufacturer.

C. Fittings: Same type and manufacturer as conduit to be connected.
   1. Cement-Tight and Watertight Joints: Use adhesive and manufacturer's standard gaskets.

2.13 ACCESSORIES

A. Corrosion Protection Tape: PVC-based, minimum thickness of 20 mil, 0.020 inch.

B. Conduit Joint Compound: Corrosion-resistant, electrically conductive compound listed as complying with UL 2419; suitable for use with conduit to be installed.

C. Epoxy Adhesive for RTRC Conduit and Fittings: As recommended by manufacturer of conduit and fittings to be installed.

D. Pull Strings: Use nylon or polyester tape with average breaking strength of not less than 1,250 lbf.

E. Sealing Compound for Hazardous/Classified Location Sealing Fittings: Listed for use with particular fittings to be installed.

F. Sealing Systems for Roof Penetrations: Premanufactured components and accessories as required to preserve integrity of roofing system and maintain roof warranty; suitable for conduits and roofing system to be installed; designed to accommodate existing penetrations where applicable.

G. Flashing Panels for Exterior Wall Penetrations: Premanufactured components and accessories as required to preserve integrity of building envelope; suitable for conduits and facade materials to be installed.

H. Firestop Sleeves: Listed; provide as required to preserve fire resistance rating of building elements.

I. Duct Bank Spacers: Nonmetallic; designed for maintaining conduit/duct spacing for concrete encasement in open trench installation; suitable for conduit/duct arrangement to be installed.

PART 3 EXECUTION

3.01 EXAMINATION

A. Verify that field measurements are as indicated.

B. Verify that mounting surfaces are ready to receive conduits.

C. Verify that conditions are satisfactory for installation prior to starting work.

3.02 INSTALLATION

A. Install products in accordance with manufacturer's instructions.

B. Install conduit in accordance with NECA 1.

C. Install galvanized steel rigid metal conduit (RMC) in accordance with NECA 101.

D. Install intermediate metal conduit (IMC) in accordance with NECA 101.

E. Install PVC-coated galvanized steel rigid metal conduit (RMC) using only tools approved by manufacturer.

F. Conduit Routing:
   1. Unless dimensioned, conduit routing indicated is diagrammatic.
   2. When conduit destination is indicated without specific routing, determine exact routing required.
   3. Conceal conduits unless specifically indicated to be exposed.
   4. Conduits in the following areas may be exposed, unless otherwise indicated:
      a. Electrical rooms.
      b. Mechanical equipment rooms.
      c. Within joists in areas with no ceiling.
   5. Conduits installed underground or embedded in concrete may be routed in shortest possible manner unless otherwise indicated. Route other conduits parallel or perpendicular to building structure and surfaces, following surface contours where practical.
   6. Arrange conduit to maintain adequate headroom, clearances, and access.
   7. Arrange conduit to provide no more than equivalent of four 90-degree bends between pull points.
   8. Arrange conduit to provide no more than 150 feet between pull points.
   9. Route conduits above water and drain piping where possible.
   10. Arrange conduit to prevent moisture traps. Provide drain fittings at low points and at sealing fittings where moisture may collect.
   11. Maintain minimum clearance of 6 inches between conduits and piping for other systems.
   12. Maintain minimum clearance of 12 inches between conduits and hot surfaces. This includes, but is not limited to:
      a. Heaters.
      b. Hot water piping.

c. Flues.

13. Group parallel conduits in same area on common rack.

G. Conduit Support:
1. Secure and support conduits in accordance with NFPA 70 using suitable supports and methods approved by authorities having jurisdiction; see Section 26 0529.
2. Provide independent support from building structure. Do not provide support from piping, ductwork, or other systems.
3. Installation Above Suspended Ceilings: Do not provide support from ceiling support system. Do not provide support from ceiling grid or allow conduits to lay on ceiling tiles.
4. Use conduit strap to support single surface-mounted conduit.
   a. Use clamp back spacer with conduit strap for damp and wet locations to provide space between conduit and mounting surface.
5. Use metal channel/strut with accessory conduit clamps to support multiple parallel surface-mounted conduits.
6. Use conduit clamp to support single conduit from beam clamp or threaded rod.
7. Use trapeze hangers assembled from threaded rods and metal channel/strut with accessory conduit clamps to support multiple parallel suspended conduits.
8. Use nonpenetrating rooftop supports to support conduits routed across rooftops, where approved.
9. Use of spring steel conduit clips for support of conduits is not permitted.
10. Use of wire for support of conduits is not permitted.
11. Where conduit support intervals specified in NFPA 70 and NECA standards differ, comply with most stringent requirements.

H. Connections and Terminations:
1. Use approved zinc-rich paint or conduit joint compound on field-cut threads of galvanized steel conduits prior to making connections.
2. Where two threaded conduits must be joined and neither can be rotated, use three-piece couplings or split couplings. Do not use running threads.
3. Use suitable adapters where required to transition from one type of conduit to another.
4. Provide drip loops for liquidtight flexible conduit connections to prevent drainage of liquid into connectors.
5. Terminate threaded conduits in boxes and enclosures using threaded hubs or double lock nuts for dry locations and raintight hubs for wet locations.
6. Provide insulating bushings, insulated throats, or listed metal fittings with smooth, rounded edges at conduit terminations to protect conductors.
7. Secure joints and connections to provide mechanical strength and electrical continuity.

I. Penetrations:
1. Do not penetrate or otherwise notch or cut structural members, including footings and grade beams, without approval of Structural Engineer.
2. Make penetrations perpendicular to surfaces unless otherwise indicated.
3. Provide sleeves for penetrations as indicated or as required to facilitate installation. Set sleeves flush with exposed surfaces unless otherwise indicated or required.
4. Conceal bends for conduit risers emerging above ground.
5. Where conduits penetrate waterproof membrane, seal as required to maintain integrity of membrane.
6. Install firestopping to preserve fire resistance rating of partitions and other elements; see Section 07 8400.

J. Underground Installation:
1. Minimum Cover, Unless Otherwise Indicated or Required:

a. Underground, Exterior: 18 inches.
b. Under Slab on Grade: 12 inches to bottom of slab.

2. Provide underground warning tape along entire conduit length for service entrance where not concrete-encased; see Section 26 0553.

K. Concrete Encasement: Where conduits not otherwise embedded within concrete are indicated to be concrete-encased, provide minimum concrete cover of 3 inches on all sides unless otherwise indicated; see Section 03 3000.

L. Conduit Movement Provisions: Where conduits are subject to movement, provide expansion and expansion/deflection fittings to prevent damage to enclosed conductors or connected equipment. This includes, but is not limited to:

1. Where conduits cross structural joints intended for expansion, contraction, or deflection.
2. Where calculated in accordance with NFPA 70 for reinforced thermosetting resin conduit (RTRC) conduit installed above ground to compensate for thermal expansion and contraction.
3. Where conduits are subject to earth movement by settlement or frost.

M. Conduit Sealing:

1. Use foam conduit sealant to prevent entry of moisture and gases. This includes, but is not limited to:
   a. Where conduits enter building from outside.
   b. Where service conduits enter building from underground distribution system.
   c. Where conduits enter building from underground.
   d. Where conduits may transport moisture to contact live parts.
2. Where conduits cross barriers between areas of potential substantial temperature differential, use foam conduit sealant at accessible point near penetration to prevent condensation. This includes, but is not limited to:
   a. Where conduits pass from outdoors into conditioned interior spaces.
   b. Where conduits pass from unconditioned interior spaces into conditioned interior spaces.

N. Provide pull string in each empty conduit and in conduits where conductors and cables are to be installed by others. Leave minimum slack of 12 inches at each end.

O. Provide grounding and bonding; see Section 26 0526.

P. Identify conduits; see Section 26 0553.

3.03 FIELD QUALITY CONTROL

A. Repair cuts and abrasions in galvanized finishes using zinc-rich paint recommended by manufacturer. Replace components that exhibit signs of corrosion.

B. Where coating of PVC-coated galvanized steel rigid metal conduit (RMC) contains cuts or abrasions, repair in accordance with manufacturer's instructions.

C. Correct deficiencies and replace damaged or defective conduits.

3.04 CLEANING

A. Clean interior of conduits to remove moisture and foreign matter.

3.05 PROTECTION

A. Immediately after installation of conduit, use suitable manufactured plugs to provide protection from entry of moisture and foreign material and do not remove until ready for installation of conductors.

END OF SECTION

SECTION 26 0533.16
BOXES FOR ELECTRICAL SYSTEMS

PART 1 GENERAL

1.01 SECTION INCLUDES

A. Outlet and device boxes up to 100 cubic inches, including those used as junction and pull boxes.

B. Cabinets and enclosures, including junction and pull boxes larger than 100 cubic inches.

C. Boxes and enclosures for integrated power, data, and audio/video.

D. Floor boxes.

E. Underground boxes/enclosures.

F. Accessories.

1.02 RELATED REQUIREMENTS

A. Section 08 3100 - Access Doors and Panels: Panels for maintaining access to concealed boxes.

B. Section 26 0526 - Grounding and Bonding for Electrical Systems.

C. Section 26 0529 - Hangers and Supports for Electrical Systems.

D. Section 26 0533.13 - Conduit for Electrical Systems:
   1. Conduit bodies and other fittings.
   2. Additional requirements for locating boxes to limit conduit length and/or number of bends between pulling points.

E. Section 26 0548 - Vibration and Seismic Controls for Electrical Systems.

F. Section 26 0553 - Identification for Electrical Systems: Identification products and requirements.

G. Section 26 2726 - Wiring Devices:
   1. Wall plates.
   2. Floor box service fittings.
   3. Poke-through assemblies.
   4. Access floor boxes.
   5. Additional requirements for locating boxes for wiring devices.

1.03 REFERENCE STANDARDS

A. NECA 1 - Standard for Good Workmanship in Electrical Construction 2015.

B. NECA 130 - Standard for Installing and Maintaining Wiring Devices 2016.

C. NEMA 250 - Enclosures for Electrical Equipment (1000 Volts Maximum) 2020.

D. NEMA FB 1 - Fittings, Cast Metal Boxes, and Conduit Bodies for Conduit, Electrical Metallic Tubing, and Cable 2014.

E. NEMA OS 1 - Sheet-Steel Outlet Boxes, Device Boxes, Covers, and Box Supports 2013 (Reaffirmed 2020).

F. NFPA 70 - National Electrical Code Most Recent Edition Adopted by Authority Having Jurisdiction, Including All Applicable Amendments and Supplements.

G. SCTE 77 - Specifications for Underground Enclosure Integrity 2017.

H. UL 50 - Enclosures for Electrical Equipment, Non-Environmental Considerations Current Edition, Including All Revisions.

I. UL 50E - Enclosures for Electrical Equipment, Environmental Considerations Current Edition, Including All Revisions.

J. UL 508A - Industrial Control Panels Current Edition, Including All Revisions.

K. UL 514A - Metallic Outlet Boxes Current Edition, Including All Revisions.

1.04 ADMINISTRATIVE REQUIREMENTS

A. Coordination:
1. Coordinate the work with other trades to avoid placement of ductwork, piping, equipment, or other potential obstructions within the dedicated equipment spaces and working clearances for electrical equipment required by NFPA 70.
2. Coordinate arrangement of electrical equipment with the dimensions and clearance requirements of the actual equipment to be installed.
3. Coordinate minimum sizes of boxes with the actual installed arrangement of conductors, clamps, support fittings, and devices, calculated according to NFPA 70.
4. Coordinate minimum sizes of pull boxes with the actual installed arrangement of connected conduits, calculated according to NFPA 70.
5. Coordinate the placement of boxes with millwork, furniture, devices, equipment, etc. installed under other sections or by others.
6. Coordinate the work with other trades to preserve insulation integrity.
7. Coordinate the work with other trades to provide walls suitable for installation of flush-mounted boxes where indicated.
8. Notify Architect of any conflicts with or deviations from Contract Documents. Obtain direction before proceeding with work.

1.05 SUBMITTALS

A. Product Data: Provide manufacturer's standard catalog pages and data sheets for cabinets and enclosures, boxes for hazardous (classified) locations, floor boxes, and underground boxes/enclosures.
1. Underground Boxes/Enclosures: Include reports for load testing in accordance with SCTE 77 certified by a professional engineer or an independent testing agency upon request.

B. Maintenance Materials: Furnish the following for Owner's use in maintenance of project.
1. See Section 01 6000 - Product Requirements, for additional provisions.
2. Keys for Lockable Enclosures: Two of each different key.

1.06 QUALITY ASSURANCE

A. Comply with requirements of NFPA 70.

B. Product Listing Organization Qualifications: An organization recognized by OSHA as a Nationally Recognized Testing Laboratory (NRTL) and acceptable to authorities having jurisdiction.

1.07 DELIVERY, STORAGE, AND HANDLING

A. Receive, inspect, handle, and store products in accordance with manufacturer's instructions.

PART 2 PRODUCTS

2.01 BOXES

A. General Requirements:
1. Do not use boxes and associated accessories for applications other than as permitted by NFPA 70 and product listing.
2. Provide all boxes, fittings, supports, and accessories required for a complete raceway system and to accommodate devices and equipment to be installed.
3. Provide products listed, classified, and labeled as suitable for the purpose intended.
4. Where box size is not indicated, size to comply with NFPA 70 but not less than applicable minimum size requirements specified.
5. Provide grounding terminals within boxes where equipment grounding conductors terminate.

B. Outlet and Device Boxes Up to 100 cubic inches, Including Those Used as Junction and Pull Boxes:
1. Use sheet-steel boxes for dry locations unless otherwise indicated or required.

2. Use cast iron boxes or cast aluminum boxes for damp or wet locations unless otherwise indicated or required; furnish with compatible weatherproof gasketed covers.
3. Use suitable concrete type boxes where flush-mounted in concrete.
4. Use suitable masonry type boxes where flush-mounted in masonry walls.
5. Use raised covers suitable for the type of wall construction and device configuration where required.
6. Use shallow boxes only where required by the type of wall construction.
7. Do not use "through-wall" boxes designed for access from both sides of wall.
8. Sheet-Steel Boxes: Comply with NEMA OS 1, and list and label as complying with UL 514A.
9. Cast Metal Boxes: Comply with NEMA FB 1, and list and label as complying with UL 514A; furnish with threaded hubs.
10. Boxes for Supporting Luminaires and Ceiling Fans: Listed as suitable for the type and weight of load to be supported; furnished with fixture stud to accommodate mounting of luminaire where required.
11. Boxes for Ganged Devices: Use multigang boxes of single-piece construction. Do not use field-connected gangable boxes unless specifically indicated or permitted.
12. Minimum Box Size, Unless Otherwise Indicated:
    a. Wiring Devices (Other Than Communications Systems Outlets): 4 inch square by 2-1/8 inch deep (100 by 54 mm) trade size.
    b. Communications Systems Outlets: 4 inch square by 2-1/8 inch (100 by 54 mm) trade size.
    c. Ceiling Outlets: 4 inch octagonal or square by 2-1/8 inch deep (100 by 54 mm) trade size.
13. Wall Plates: Comply with Section 26 2726.

C. Cabinets and Enclosures, Including Junction and Pull Boxes Larger Than 100 cubic inches:
1. Comply with NEMA 250, and list and label as complying with UL 50 and UL 50E, or UL 508A.
2. NEMA 250 Environment Type, Unless Otherwise Indicated:
    a. Indoor Clean, Dry Locations: Type 1, painted steel.
    b. Outdoor Locations: Type 3R, painted steel.
3. Junction and Pull Boxes Larger Than 100 cubic inches:
    a. Provide screw-cover or hinged-cover enclosures unless otherwise indicated.
4. Cabinets and Hinged-Cover Enclosures, Other Than Junction and Pull Boxes:
    a. Provide lockable hinged covers, all locks keyed alike unless otherwise indicated.
5. Finish for Painted Steel Enclosures: Manufacturer's standard grey unless otherwise indicated.

D. Boxes and Enclosures for Integrated Power, Data, and Audio/Video: Size and configuration as indicated or as required with partitions to separate services; field-connected gangable boxes may not be used.

E. Underground Boxes/Enclosures:
1. Description: In-ground, open bottom boxes furnished with flush, non-skid covers with legend indicating type of service and stainless steel tamper resistant cover bolts.
2. Size: As indicated on drawings.
3. Depth: As required to extend below frost line to prevent frost upheaval, but not less than 12 inches.
4. Provide logo on cover to indicate type of service.
5. Applications:
    a. Sidewalks and Landscaped Areas Subject Only to Occasional Nondeliberate Vehicular Traffic: Use polymer concrete enclosures, with minimum SCTE 77 Tier 8 load rating.
    b. Parking Lots, in Areas Subject Only To Occasional Nondeliberate Vehicular Traffic: Use polymer concrete enclosures, with minimum SCTE 77 Tier 15 load rating.
    c. Do not use polymer concrete enclosures in areas subject to deliberate vehicular traffic.
6. Polymer Concrete Underground Boxes/Enclosures: Comply with SCTE 77.
    a. Combination fiberglass/polymer concrete boxes/enclosures are acceptable.

2.02 ACCESSORIES

A. Flashing Panels for Exterior Wall Penetrations: Premanufactured components and accessories as required to preserve integrity of building envelope; suitable for boxes and facade materials to be installed.

PART 3 EXECUTION

3.01 EXAMINATION

A. Verify that field measurements are as indicated.

B. Verify that mounting surfaces are ready to receive boxes.

C. Verify that conditions are satisfactory for installation prior to starting work.

3.02 INSTALLATION

A. Install products in accordance with manufacturer's instructions.

B. Install boxes in accordance with NECA 1 (general workmanship) and, where applicable, NECA 130, including mounting heights specified in those standards where mounting heights are not indicated.

C. Arrange equipment to provide minimum clearances in accordance with manufacturer's instructions and NFPA 70.

D. Provide separate boxes for emergency power and normal power systems.

E. Unless otherwise indicated, provide separate boxes for line voltage and low voltage systems.

F. Flush-mount boxes in finished areas unless specifically indicated to be surface-mounted.

G. Unless otherwise indicated, boxes may be surface-mounted where exposed conduits are indicated or permitted.

H. Box Locations:
   1. Locate boxes to be accessible. Provide access panels in accordance with Section 08 3100 as required where approved by the Architect.
   2. Unless dimensioned, box locations indicated are approximate.
   3. Locate boxes as required for devices installed under other sections or by others.
   4. Locate boxes so that wall plates do not span different building finishes.
   5. Locate boxes so that wall plates do not cross masonry joints.
   6. Unless otherwise indicated, where multiple outlet boxes are installed at the same location at different mounting heights, install along a common vertical center line.
   7. Do not install flush-mounted boxes on opposite sides of walls back-to-back. Provide minimum 12 inches horizontal separation unless otherwise indicated.
   8. Acoustic-Rated Walls: Do not install flush-mounted boxes on opposite sides of walls back-to-back; provide minimum 24 inches horizontal separation.
   9. Fire Resistance Rated Walls: Install flush-mounted boxes such that the required fire resistance will not be reduced.
      a. Do not install flush-mounted boxes on opposite sides of walls back-to-back; provide minimum 24 inches separation where wall is constructed with individual noncommunicating stud cavities or protect both boxes with listed putty pads.
      b. Do not install flush-mounted boxes with area larger than 16 square inches or such that the total aggregate area of openings exceeds 100 square inches for any 100 square feet of wall area.
   10. Locate junction and pull boxes as indicated, as required to facilitate installation of conductors, and to limit conduit length and/or number of bends between pulling points in accordance with Section 26 0533.13.
   11. Locate junction and pull boxes in the following areas, unless otherwise indicated or approved by the Architect:

a. Concealed above accessible suspended ceilings.
b. Within joists in areas with no ceiling.
c. Electrical rooms.
d. Mechanical equipment rooms.

I. Box Supports:
1. Secure and support boxes in accordance with NFPA 70 and Section 26 0529 using suitable supports and methods approved by the authority having jurisdiction.
2. Provide required seismic controls in accordance with Section 26 0548.
3. Provide independent support from building structure except for cast metal boxes (other than boxes used for fixture support) supported by threaded conduit connections in accordance with NFPA 70. Do not provide support from piping, ductwork, or other systems.
4. Installation Above Suspended Ceilings: Do not provide support from ceiling grid or ceiling support system.

J. Install boxes plumb and level.

K. Flush-Mounted Boxes:
1. Install boxes in noncombustible materials such as concrete, tile, gypsum, plaster, etc. so that front edge of box or associated raised cover is not set back from finished surface more than 1/4 inch or does not project beyond finished surface.
2. Install boxes in combustible materials such as wood so that front edge of box or associated raised cover is flush with finished surface.
3. Repair rough openings around boxes in noncombustible materials such as concrete, tile, gypsum, plaster, etc. so that there are no gaps or open spaces greater than 1/8 inch at the edge of the box.

L. Install boxes as required to preserve insulation integrity.

M. Underground Boxes/Enclosures:
1. Install enclosure on gravel base, minimum 6 inches deep.
2. Flush-mount enclosures located in concrete or paved areas.
3. Mount enclosures located in landscaped areas with top at 1 inch above finished grade.
4. Install additional bracing inside enclosures in accordance with manufacturer's instructions to minimize box sidewall deflections during backfilling. Backfill with cover bolted in place.

N. Install permanent barrier between ganged wiring devices when voltage between adjacent devices exceeds 300 V.

O. Install firestopping to preserve fire resistance rating of partitions and other elements, using materials and methods specified in Section 07 8400.

P. Close unused box openings.

Q. Install blank wall plates on junction boxes and on outlet boxes with no devices or equipment installed or designated for future use.

R. Provide grounding and bonding in accordance with Section 26 0526.

S. Identify boxes in accordance with Section 26 0553.

3.03 CLEANING

A. Clean interior of boxes to remove dirt, debris, plaster and other foreign material.

3.04 PROTECTION

A. Immediately after installation, protect boxes from entry of moisture and foreign material until ready for installation of conductors.

END OF SECTION

SECTION 26 0548
VIBRATION AND SEISMIC CONTROLS FOR ELECTRICAL SYSTEMS

PART 1 GENERAL

1.01 SECTION INCLUDES

A. Vibration isolation requirements.

B. Seismic control requirements.
   1. Includes requirements for seismic qualification of equipment not specified in this section.

C. Vibration-isolated equipment support bases.

D. Vibration isolators.

E. Seismic restraint systems.

1.02 RELATED REQUIREMENTS

A. Section 01 4533 - Code-Required Special Inspections and Procedures.

B. Section 03 3000 - Cast-in-Place Concrete.

C. Section 26 0529 - Hangers and Supports for Electrical Systems.

1.03 DEFINITIONS

A. Electrical Component: Where referenced in this section in regards to seismic controls, applies to any portion of the electrical system subject to seismic evaluation in accordance with applicable codes, including distributed systems (e.g., conduit, cable tray).

B. Seismic Restraint: Structural members or assemblies of members or manufactured elements specifically designed and applied for transmitting seismic forces between components and the seismic force-resisting system of the structure.

1.04 REFERENCE STANDARDS

A. ASCE 7 - Minimum Design Loads and Associated Criteria for Buildings and Other Structures Most Recent Edition Cited by Referring Code or Reference Standard.

B. ASCE 19 - Structural Applications of Steel Cables for Buildings 2016.

C. ASHRAE (HVACA) - ASHRAE Handbook - HVAC Applications Most Recent Edition Cited by Referring Code or Reference Standard.

D. ASTM E580/E580M - Standard Practice for Installation of Ceiling Suspension Systems for Acoustical Tile and Lay-in Panels in Areas Subject to Earthquake Ground Motions 2022.

E. FEMA 413 - Installing Seismic Restraints for Electrical Equipment 2004.

F. FEMA E-74 - Reducing the Risks of Nonstructural Earthquake Damage 2012.

G. ICC (IBC) - International Building Code Most Recent Edition Adopted by Authority Having Jurisdiction, Including All Applicable Amendments and Supplements.

H. ICC-ES AC156 - Acceptance Criteria for Seismic Certification by Shake-Table Testing of Nonstructural Components 2010, with Editorial Revision (2015).

I. MFMA-4 - Metal Framing Standards Publication 2004.

J. NECA 1 - Standard for Good Workmanship in Electrical Construction 2015.

K. NFPA 70 - National Electrical Code Most Recent Edition Adopted by Authority Having Jurisdiction, Including All Applicable Amendments and Supplements.

L. SMACNA (SRM) - Seismic Restraint Manual Guidelines for Mechanical Systems 2008.

1.05 ADMINISTRATIVE REQUIREMENTS

A. Coordination:

1. Coordinate selection and arrangement of vibration isolation and/or seismic control components with the actual equipment to be installed.
2. Coordinate the work with other trades to provide additional framing and materials required for installation.
3. Coordinate compatibility of support and attachment components with mounting surfaces at the installed locations.
4. Seismic Controls:
   a. Coordinate the arrangement of seismic restraints with ductwork, piping, equipment and other potential conflicts installed under other sections or by others.
   b. Coordinate the work with other trades to accommodate relative positioning of essential and nonessential components in consideration of seismic interaction.
5. Notify Architect of any conflicts with or deviations from Contract Documents. Obtain direction before proceeding with work.

B. Sequencing:
1. Do not install products on or provide attachment to concrete surfaces until concrete has fully cured in accordance with Section 03 3000.

1.06 SUBMITTALS

A. Design Documents: Prepare and submit all information required for plan review and permitting by authorities having jurisdiction, including but not limited to floor plans, details, and calculations.

B. Product Data: Provide manufacturer's standard catalog pages and data sheets for products, including materials, fabrication details, dimensions, and finishes.
1. Vibration Isolators: Include rated load capacities and deflections; include information on color coding or other identification methods for spring element load capacities.
2. Seismic Controls: Include seismic load capacities.

C. Shop Drawings - Vibration Isolation Systems:
1. Include dimensioned plan views and sections indicating proposed arrangement of vibration isolators; indicate equipment weights and static deflections.
2. Vibration-Isolated Equipment Support Bases: Include base weights, including concrete fill where applicable; indicate equipment mounting provisions.

D. Shop Drawings - Seismic Controls:
1. Include dimensioned plan views and sections indicating proposed electrical component locations and distributed system routing, with locations and details of gravity supports and seismic restraints and associated attachments.
2. Identify mounting conditions required for equipment seismic qualification.
3. Identify anchor manufacturer, type, minimum embedment, minimum spacing, minimum member thickness, and minimum edge distance requirements.
4. Indicate proposed arrangement of distributed system trapeze support groupings.
5. Indicate proposed locations for distributed system flexible fittings and/or connections.
6. Indicate locations of seismic separations where applicable.

E. Seismic Design Data:
1. Compile information on project-specific characteristics of actual installed electrical components necessary for determining seismic design forces required to design appropriate seismic controls.
2. Include structural calculations, stamped or sealed by seismic controls designer, demonstrating suitability of seismic controls for seismic design forces.

F. Certification for seismically qualified equipment; identify basis for certification.

1.07 QUALITY ASSURANCE

A. Comply with NFPA 70.

B. Comply with applicable building code.

C. Seismic Controls Designer Qualifications: Registered professional engineer licensed in the State in which the Project is located and with minimum five years experience designing seismic restraints for nonstructural components.
   1. Designer may be employed by the manufacturer of the seismic restraint products.

D. Manufacturer Qualifications: Company specializing in manufacturing the products specified in this section with minimum three years documented experience.

1.08 DELIVERY, STORAGE, AND HANDLING

A. Receive, inspect, handle, and store products in accordance with manufacturer's instructions.

PART 2 PRODUCTS

2.01 VIBRATION ISOLATION REQUIREMENTS

A. Design and provide vibration isolation systems to reduce vibration transmission to supporting structure from vibration-producing electrical equipment and/or electrical connections to vibration-isolated equipment.

B. Comply with applicable general recommendations of ASHRAE (HVACA), where not in conflict with other specified requirements:

C. General Requirements:
   1. Select vibration isolators to provide required static deflection.
   2. Select vibration isolators for uniform deflection based on distributed operating weight of actual installed equipment.
   3. Select seismic type vibration isolators to comply with seismic design requirements, including conditions of equipment seismic certification where applicable.
   4. Select vibration isolators for outdoor equipment to comply with wind design requirements.
   5. Select vibration-isolated equipment support bases and associated vibration isolators to provide minimum 2-inch operating clearance beneath base unless otherwise indicated.

D. Equipment Isolation:
   1. Transformers:
      a. Specified vibration isolators are in addition to any factory-installed internal core and coil assembly vibration isolators unless otherwise indicated.
      b. Floor-Mounted Transformers, Nonseismic Applications: Use resilent material isolator pads, resilient material isolator mounts, or open (unhoused) spring isolators.
      c. Floor-Mounted Transformers, Seismic Applications: Use seismic type resilient material isolator mounts or seismic type restrained spring isolators.
      d. Suspended Transformers, Nonseismic Applications: Use resilient material isolator hangers, spring isolator hangers, or combination resilient material/spring isolator hangers.
      e. Suspended Transformers, Seismic Applications: Use seismic type resilient material isolator hangers, seismic type spring isolator hangers, or seismic type combination resilient material/spring isolator hangers.
      f. Wall-Mounted Transformers, Nonseismic Applications: Use resilient material isolator mounts.
      g. Wall-Mounted Transformers, Seismic Applications: Use seismic type resilient material isolator mounts.
      h. Minimum Static Deflection:
         1) Transformers Mounted on Grade-Level Slabs: 0.25 inch deflection unless otherwise indicated.
         2) Transformers Mounted at Above-Grade Levels: 0.5 inch deflection unless otherwise indicated.

2. Engine Generators:
    a. Specified vibration isolators are in addition to any factory-installed internal vibration isolators between generator set and integral base unless otherwise indicated; obtain generator set manufacturer approval of applied vibration isolation.
    b. Nonseismic Applications, Isolators Not Located Below Sub-Base Fuel Tank: Use housed spring isolators or restrained spring isolators.
    c. Nonseismic Applications, Isolators Located Below Sub-Base Fuel Tank: Use restrained spring isolators.
    d. Seismic Applications: Use seismic type restrained spring isolators.
    e. Provide vibration-isolated concrete inertia bases where indicated.
    f. Minimum Static Deflection:
        1) Generators Mounted on Grade-Level Slabs: 1 inch deflection unless otherwise indicated.
        2) Generators Mounted at Above-Grade Levels: 2 inch deflection unless otherwise indicated.

E. Conduit Isolation:
1. Use flexible conduit or cable for electrical connections to vibration-isolated equipment, including equipment installed under other sections or by others.
    a. Minimum Length: 3 feet unless otherwise indicated.
2. Vibration Isolators:
    a. Provide vibration isolators for conduit supports:
        1) Located within 50 feet of connected vibration-isolated equipment where flexible connection to equipment is not possible.
        2) For conduits over 2 inch trade size located below or within 50 feet of noise-sensitive areas indicated.
    b. Minimum Static Deflection:
        1) First Three Supports Closest to Isolated Equipment: Same as static deflection of equipment; maximum of 2 inch deflection required.
        2) Remainder of Supports: 0.75 inch deflection unless otherwise indicated.
    c. Suspended Conduits, Nonseismic Applications: Use resilient material isolator hangers, spring isolator hangers, or combination resilient material/spring isolator hangers.
    d. Suspended Conduits, Seismic Applications: Use seismic type resilient material isolator hangers, seismic type spring isolator hangers, or seismic type combination resilient material/spring isolator hangers.
    e. Use modular seal or approved resilient material where vibration-isolated conduits penetrate building elements (e.g., walls, floors) arranged to prevent vibration transmission to structure.

2.02 SEISMIC CONTROL REQUIREMENTS

A. Design and provide electrical component restraints, supports, and attachments suitable for seismic loads determined in accordance with applicable codes, as well as gravity and operating loads and other structural design considerations of the installed location. Consider wind loads for outdoor electrical components.

B. Seismic Design Criteria: As indicated on drawings.

C. Seismic Qualification of Equipment:
1. Provide special certification for electrical equipment furnished under other sections and assigned a component importance factor (Ip) of 1.5, certifying that equipment will remain operable following a design level earthquake.
2. Seismic qualification to be by shake table testing in accordance with recognized testing standard procedure, such as ICC-ES AC156, acceptable to authorities having jurisdiction.

3. Notify Architect and obtain direction where mounting restrictions required by conditions of seismic certification conflict with specified requirements.
4. Seismically qualified equipment to be furnished with factory-installed labels referencing certificate of compliance and associated mounting restrictions.

D. Seismic Restraints:
1. Provide seismic restraints for electrical components except where exempt according to applicable codes and specified seismic design criteria, as approved by authorities having jurisdiction.
2. Seismic Restraint Exemptions:
   a. Raceway Exemptions, All Seismic Design Categories:
      1) Conduits less than 2-1/2 inch trade size.
      2) Trapeze supported raceways weighing less than 10 pounds per foot.
      3) Hanger supported raceways where each hanger in the raceway run is 12 inches or less in length from the raceway support to the supporting structure; rod hangers, where used, to be equipped with swivels.
   b. Lighting Exemptions, All Seismic Design Categories:
      1) Suspended luminaires where attachments are designed to accommodate 1.4 times the operating weight acting in both the vertical and horizontal directions and connections to structure allow for 360 degree range of motion in the horizontal plane; arrange to prevent impact between luminaires and the structure or other nonstructural components.
      2) Lay-in luminaires weighing less than 56 pounds secured to ceiling grid and provided with safety wires in accordance with ASTM E580/E580M.
3. Comply with applicable general recommendations of the following, where not in conflict with applicable codes, seismic design criteria, or other specified requirements:
   a. ASHRAE (HVACA).
   b. FEMA 413.
   c. FEMA E-74.
   d. SMACNA (SRM).
4. Seismic restraint capacities to be verified by a Nationally Recognized Testing Laboratory (NRTL) or certified by an independent third-party registered professional engineer acceptable to authorities having jurisdiction.
5. Seismic Type Vibration Isolators:
   a. Comply with seismic design requirements, including conditions of equipment seismic certification where applicable.
6. Seismic Restraint Systems:
   a. Except where otherwise restricted, use of either cable or rigid restraints is permitted.
   b. Use only cable restraints to restrain vibration-isolated electrical components, including distributed systems.
   c. Use only one restraint system type for a given electrical component or distributed system (e.g., conduit, cable tray) run; mixing of cable and rigid restraints on a given component/run is not permitted.
   d. Size restraint elements, including anchorage, to resist seismic loads as necessary to restrain electrical component in all lateral directions; consider bracket geometry in anchor load calculations.
   e. Use rod stiffener clips to attach bracing to hanger rods as required to prevent rod buckling from vertical (upward) compressive load introduced by cable or rigid restraints loaded in tension, in excess of downward tensile load due to supported electrical component weight.
   f. Select hanger rods and associated anchorage as required to accommodate vertical (downward) tensile load introduced by rigid restraints loaded in compression, in addition to downward tensile load due to supported electrical component weight.

g. Clevis hangers may only be used for attachment of transverse restraints; do not use for attachment of longitudinal restraints.
h. Where seismic restraints are attached to clevis hangers, provide clevis bolt reinforcement accessory to prevent clevis hanger deformation.
i. Do not introduce lateral loads on open bar joist chords or the weak axis of beams, or loads in any direction at other than panel points unless approved by project Structural Engineer of Record.
j. Manufacturer's certified seismic restraint design may be submitted as an alternative to project-specific design and documentation, subject to approval of authorities having jurisdiction.

E. Seismic Attachments:
1. Attachments to be bolted, welded, or otherwise positively fastened without consideration of frictional resistance produced by the effects of gravity.
2. Post-Installed Concrete and Masonry Anchors: Evaluated and recognized by ICC Evaluation Service, LLC (ICC-ES) or qualified evaluation service acceptable to authorities having jurisdiction for compliance with applicable building code, and qualified for seismic applications; concrete anchors to be qualified for installation in both cracked and uncracked concrete.
3. Do not use power-actuated fasteners.
4. Do not use friction clips (devices that rely on mechanically applied friction to resist loads). Beam clamps may be used for supporting sustained loads where provided with restraining straps.
5. Comply with anchor minimum embedment, minimum spacing, minimum member thickness, and minimum edge distance requirements.
6. Concrete Housekeeping Pads:
a. Increase size of pad as required to comply with anchor requirements.
b. Provide pad reinforcement and doweling to ensure integrity of pad and connection and to provide adequate load path from pad to supporting structure.

F. Seismic Interactions:
1. Include provisions to prevent seismic impact between electrical components and other structural or nonstructural components.
2. Include provisions such that failure of a component, either essential or nonessential, does not cause the failure of an essential component.

G. Seismic Relative Displacement Provisions:
1. Use suitable fittings or flexible connections to accommodate:
a. Relative displacements at connections between components, including distributed systems (e.g., conduit, cable tray); do not exceed load limits for equipment utility connections.
b. Relative displacements between component supports attached to dissimilar parts of structure that may move differently during an earthquake.
c. Design displacements at seismic separations.
d. Anticipated drifts between floors.

2.03 VIBRATION-ISOLATED EQUIPMENT SUPPORT BASES

A. Vibration-Isolated Structural Steel Bases:
1. Description: Engineered structural steel frames with integral mounting provisions for vibration isolators, sized and configured for mounting of equipment.

B. Vibration-Isolated Concrete Inertia Bases:
1. Description: Concrete-filled engineered steel forms with integral mounting provisions for vibration isolators, sized and configured for mounting of equipment.
2. Minimum Base Depth: 6 inches.
3. Minimum Base Mass (Including Concrete): 1.5 times weight of supported equipment.
4. Concrete Reinforcement: Welded or tied reinforcing bars running both ways in a single layer.

5. Concrete: Filled on site with minimum 3000 psi concrete in accordance with Section 03 3000.

2.04 VIBRATION ISOLATORS

A. General Requirements:
   1. Resilient Materials for Vibration Isolators: Oil, ozone, and oxidant resistant.
   2. Spring Elements for Spring Isolators:
      a. Color code or otherwise identify springs to indicate load capacity.
      b. Lateral Stability: Minimum lateral stiffness to vertical stiffness ratio of 0.8.
      c. Designed to operate in the linear portion of their load versus deflection curve over deflection range of not less than 50 percent above specified deflection.
      d. Designed to provide additional travel to solid of not less than 50 percent of rated deflection at rated load.
      e. Selected to provide designed deflection of not less than 75 percent of specified deflection.
      f. Selected to function without undue stress or overloading.
   3. Seismic Snubbing Elements for Seismic Isolators:
      a. Air Gap: Between 0.125 inches and 0.25 inches unless otherwise indicated.
      b. Points of Contact: Cushioned with resilient material, minimum 0.25 inch thick; capable of being visually inspected for damage and replaced.

B. Vibration Isolators for Nonseismic Applications:
   1. Resilient Material Isolator Pads:
      a. Description: Single or multiple layer pads utilizing elastomeric (e.g., neoprene, rubber) or fiberglass isolator material.
      b. Pad Thickness: As required for specified minimum static deflection; minimum 0.25 inch thickness.
      c. Multiple Layer Pads: Provide bonded, galvanized sheet metal separation plate between each layer.
   2. Resilient Material Isolator Mounts, Nonseismic:
      a. Description: Mounting assemblies for bolting equipment to supporting structure utilizing elastomeric (e.g., neoprene, rubber) or fiberglass isolator material; fail-safe type.
   3. Open (Unhoused) Spring Isolators:
      a. Description: Isolator assembly consisting of single or multiple free-standing, laterally stable steel spring(s) without a housing.
      b. Bottom Load Plate: Nonskid, molded, elastomeric isolator material or steel with nonskid elastomeric isolator pad with provisions for bolting to supporting structure as required.
      c. Furnished with integral leveling device for positioning and securing supported equipment.
   4. Housed Spring Isolators:
      a. Description: Isolator assembly consisting of single or multiple free-standing, laterally stable steel spring(s) within a metal housing.
      b. Furnished with integral elastomeric snubbing elements, nonadjustable type, for limiting equipment movement and preventing metal-to-metal contact between housing elements.
      c. Bottom Load Plate: Steel with nonskid, elastomeric isolator pad with provisions for bolting to supporting structure as required.
      d. Furnished with integral leveling device for positioning and securing supported equipment.
   5. Restrained Spring Isolators, Nonseismic:
      a. Description: Isolator assembly consisting of single or multiple free-standing, laterally stable steel spring(s) within a metal housing designed to prevent movement of supported equipment above an adjustable vertical limit stop.
      b. Bottom Load Plate: Steel with nonskid, elastomeric isolator pad with provisions for bolting to supporting structure as required.
      c. Furnished with integral leveling device for positioning and securing supported equipment.

d. Provides constant free and operating height.

6. Resilient Material Isolator Hangers, Nonseismic:
   a. Description: Isolator assembly designed for installation in hanger rod suspension system utilizing elastomeric (e.g., neoprene, rubber) or fiberglass isolator material for the lower hanger rod connection.
7. Spring Isolator Hangers, Nonseismic:
   a. Description: Isolator assembly designed for installation in hanger rod suspension system utilizing single or multiple free-standing, laterally stable steel spring(s) in series with an elastomeric element for the lower hanger rod connection.
   b. Designed to accommodate misalignment of bottom hanger rod up to 30 degrees (plus/minus 15 degrees) without short-circuiting of isolation.
8. Combination Resilient Material/Spring Isolator Hangers, Nonseismic:
   a. Description: Isolator assembly designed for installation in hanger rod suspension system utilizing single or multiple free-standing, laterally stable steel spring(s) for the lower hanger rod connection and elastomeric (e.g., neoprene, rubber) or fiberglass isolator material for the upper hanger rod connection.
   b. Designed to accommodate misalignment of bottom hanger rod up to 30 degrees (plus/minus 15 degrees) without short-circuiting of isolation.

C. Vibration Isolators for Seismic Applications:
1. Restrained Spring Isolators, Seismic:
   a. Description: Isolator assembly consisting of single or multiple free-standing, laterally stable steel spring(s) in series with elastomeric (e.g., neoprene, rubber) isolator material within a metal housing designed to prevent movement of supported equipment above an adjustable vertical limit stop; specifically designed and rated for seismic applications with integral snubbing in all directions.
   b. Bottom Load Plate: Steel with provisions for bolting to supporting structure as required.
   c. Furnished with integral leveling device for positioning and securing supported equipment.
   d. Provides constant free and operating height.
2. Resilient Material Isolator Hangers, Seismic:
   a. Description: Isolator assembly designed for installation in hanger rod suspension system utilizing elastomeric (e.g., neoprene, rubber) isolator material for the lower hanger rod connection; specifically designed and rated for seismic applications with vertical limit stop to prevent upward travel of hanger rod and cushion impact.
3. Spring Isolator Hangers, Seismic:
   a. Description: Isolator assembly designed for installation in hanger rod suspension system utilizing single or multiple free-standing, laterally stable steel spring(s) in series with an elastomeric element for the lower hanger rod connection; specifically designed and rated for seismic applications with vertical limit stop to prevent upward travel of hanger rod and cushion impact.
   b. Designed to accommodate misalignment of bottom hanger rod up to 30 degrees (plus/minus 15 degrees) without short-circuiting of isolation.
4. Combination Resilient Material/Spring Isolator Hangers, Seismic:
   a. Description: Isolator assembly designed for installation in hanger rod suspension system utilizing single or multiple free-standing, laterally stable steel spring(s) for the lower hanger rod connection and elastomeric (e.g., neoprene, rubber) isolator material for the upper hanger rod connection; specifically designed and rated for seismic applications with vertical limit stop to prevent upward travel of hanger rod and cushion impact.
   b. Designed to accommodate misalignment of bottom hanger rod up to 30 degrees (plus/minus 15 degrees) without short-circuiting of isolation.

2.05 SEISMIC RESTRAINT SYSTEMS

A. Description: System components and accessories specifically designed for field assembly and attachment of seismic restraints.

B. Cable Restraints:
   1. Comply with ASCE 19.
   2. Cables: Pre-stretched, galvanized steel wire rope with certified break strength.
   3. Cable Connections: Use only swaged end fittings. Cable clips and wedge type end fittings are not permitted in accordance with ASCE 19.
   4. Use protective thimbles for cable loops where potential for cable damage exists.

C. Rigid Restraints: Use MFMA-4 steel channel (strut), steel angle, or steel pipe for structural element; suitable for both compressive and tensile design loads.

PART 3 EXECUTION

3.01 EXAMINATION

A. Verify that field measurements are as shown on the drawings.

B. Verify that mounting surfaces are ready to receive vibration isolation and/or seismic control components and associated attachments.

C. Verify that conditions are satisfactory for installation prior to starting work.

3.02 CODE-REQUIRED SPECIAL INSPECTIONS

A. Arrange work to accommodate tests and/or inspections performed by Special Inspection Agency employed by Owner or Architect in accordance with Section 01 4533 and statement of special inspections as required by applicable building code.

B. Frequency of Special Inspections: Where special inspections are designated as continuous or periodic, arrange work accordingly.
   1. Continuous Special Inspections: Special Inspection Agency to be present in the area where the work is being performed and observe the work at all times the work is in progress.
   2. Periodic Special Inspections: Special Inspection Agency to be present in the area where work is being performed and observe the work part-time or intermittently and at the completion of the work.

C. Seismic special inspections include, but are not limited to:
   1. Seismically Qualified Equipment: Verification that label, anchorage, and mounting comply with certificate of compliance.

D. Prior to starting work, Contractor to submit written statement of responsibility to authorities having jurisdiction and to Owner acknowledging awareness of special requirements contained in the statement of special inspections.

E. Special Inspection Agency services do not relieve Contractor from performing inspections and testing specified elsewhere.

3.03 INSTALLATION

A. Install products in accordance with manufacturer's instructions.

B. Install products in accordance with applicable requirements of NECA 1 (general workmanship).

C. Install anchors and fasteners in accordance with ICC Evaluation Services, LLC (ICC-ES) evaluation report conditions of use where applicable.

D. Secure fasteners according to manufacturer's recommended torque settings.

E. Install flexible conduit and cable connections to provide sufficient slack for vibration isolation and/or seismic relative displacements as indicated or as required.

F. Vibration Isolation Systems:
   1. Vibration-Isolated Equipment Support Bases:
      a. Provide specified minimum clearance beneath base.
   2. Spring Isolators:
      a. Position equipment at operating height; provide temporary blocking as required.
      b. Lift equipment free of isolators prior to lateral repositioning to avoid damage to isolators.
      c. Level equipment by adjusting isolators gradually in sequence to raise equipment uniformly such that excessive weight or stress is not placed on any single isolator.
   3. Isolator Hangers:
      a. Use precompressed isolator hangers where required to facilitate installation and prevent damage to equipment utility connection provisions.
      b. Locate isolator hangers at top of hanger rods in accordance with manufacturer's instructions.
   4. Clean debris from beneath vibration-isolated equipment that could cause short-circuiting of isolation.
   5. Use elastomeric grommets for attachments where required to prevent short-circuiting of isolation.
   6. Adjust isolators to be free of isolation short circuits during normal operation.
   7. Do not overtighten fasteners such that resilient material isolator pads are compressed beyond manufacturer's maximum recommended deflection.

G. Seismic Controls:
   1. Provide specified snubbing element air gap; remove any factory-installed spacers, debris or other obstructions.
   2. Use only specified components, anchorage, and hardware evaluated by seismic design. Comply with conditions of seismic certification where applicable.
   3. Where mounting hole diameter exceeds bolt diameter by more than 0.125 inch, use epoxy grout, elastomeric grommet, or welded washer to reduce clearance to 0.125 inch or less.
   4. Equipment with Sheet Metal Housings:
      a. Use Belleville washers to distribute stress over a larger surface area of the sheet metal connection interface as approved by manufacturer.
      b. Attach additional steel as approved by manufacturer where required to transfer loads to structure.
      c. Where mounting surface is irregular, do not shim housing; reinforce housing with additional steel as approved by manufacturer.
   5. Concrete Housekeeping Pads:
      a. Size in accordance with seismic design to meet anchor requirements.
      b. Install pad reinforcement and doweling in accordance with seismic design to ensure integrity of pad and associated connection to slab.
   6. Seismic Restraint Systems:
      a. Do not attach seismic restraints and gravity supports to dissimilar parts of structure that may move differently during an earthquake.
      b. Install restraints within permissible angles in accordance with seismic design.
      c. Install cable restraints straight between component/run and structural attachment; do not bend around other nonstructural components or structural elements.
      d. Install cable restraints for vibration-isolated components slightly slack to prevent short-circuiting of isolation.
      e. Install hanger rod stiffeners where indicated using only specified clamps; do not weld stiffeners to hanger rod.

3.04 FIELD QUALITY CONTROL

A. Inspect vibration isolation and/or seismic control components for damage and defects.

B. Vibration Isolation Systems:
   1. Verify isolator static deflections.
   2. Verify required clearance beneath vibration-isolated equipment support bases.
   3. Verify vibration isolation performance during normal operation; investigate sources of isolation short circuits.

C. Seismic Controls:
   1. Verify snubbing element air gaps.

D. Correct deficiencies and replace damaged or defective vibration isolation and/or seismic control components.

END OF SECTION

SECTION 26 0553
IDENTIFICATION FOR ELECTRICAL SYSTEMS

PART 2 PRODUCTS

1.01 IDENTIFICATION REQUIREMENTS

A. Identification for Equipment:
   1. Use identification nameplate to identify each piece of electrical distribution and control equipment and associated sections, compartments, and components.
      a. Panelboards:
         1) Identify ampere rating.
         2) Identify voltage and phase.
         3) Identify power source and circuit number. Include location when not within sight of equipment.
         4) Use typewritten circuit directory to identify load(s) served for panelboards with a door. Identify spares and spaces using pencil.
         5) For power panelboards without a door, use identification nameplate to identify load(s) served for each branch device. Identify spares and spaces.
      b. Transformers:
         1) Identify kVA rating.
         2) Identify voltage and phase for primary and secondary.
         3) Identify power source and circuit number. Include location when not within sight of equipment.
         4) Identify load(s) served. Include location when not within sight of equipment.
      c. Enclosed switches, circuit breakers, and motor controllers:
         1) Identify voltage and phase.
         2) Identify power source and circuit number. Include location when not within sight of equipment.
         3) Identify load(s) served. Include location when not within sight of equipment.
      d. Transfer Switches:
         1) Identify voltage and phase.
         2) Identify power source and circuit number for both normal power source and standby power source. Include location when not within sight of equipment.
         3) Identify load(s) served. Include location when not within sight of equipment.
         4) Identify short circuit current rating based on the specific overcurrent protective device type and settings protecting the transfer switch.
      e. Electricity Meters:
         1) Identify load(s) metered.
   2. Service Equipment:
      a. Use identification nameplate to identify each service disconnecting means.
      b. For buildings or structures supplied by more than one service, or any combination of branch circuits, feeders, and services, use identification nameplate or means of identification acceptable to authority having jurisdiction at each service disconnecting means to identify all other services, feeders, and branch circuits supplying that building or structure. Verify format and descriptions with authority having jurisdiction.
   3. Emergency System Equipment:
      a. Use identification nameplate or voltage marker to identify emergency system equipment in accordance with NFPA 70.
      b. Use identification nameplate at each piece of service equipment to identify type and location of on-site emergency power sources.

4. Use identification nameplate to identify disconnect location for equipment with remote disconnecting means.
5. Use identification label or handwritten text using indelible marker on inside of door at each fused switch to identify required NEMA fuse class and size.
6. Use identification label or handwritten text using indelible marker on inside of door at each motor controller to identify nameplate horsepower, full load amperes, code letter, service factor, voltage, and phase of motor(s) controlled.
7. Use identification label to identify overcurrent protective devices for branch circuits serving fire alarm circuits. Identify with text "FIRE ALARM CIRCUIT".
8. Use field-painted floor markings, floor marking tape, or warning labels to identify required equipment working clearances where indicated or where required by the authority having jurisdiction.
    a. Field-Painted Floor Markings: Alternating black and white stripes, 3 inches wide, painted in accordance with Section 09 9123 and 09 9113.
9. Available Fault Current Documentation: Use identification label to identify the available fault current and date calculations were performed at locations requiring documentation by NFPA 70 including but not limited to the following.
    a. Service equipment.
    b. Elevator control panels.
10. Arc Flash Hazard Warning Labels: Comply with Section 26 0573.
11. Use warning signs to identify electrical hazards for entrances to all rooms and other guarded locations that contain exposed live parts operating at 600 V nominal or less with the word message "DANGER; Electrical hazard; Authorized personnel only" or approved equivalent.
12. Use warning labels, identification nameplates, or identification labels to identify electrical hazards for equipment where multiple power sources are present with the message "DANGER; Hazardous voltage; Multiple power sources may be present; Disconnect all electric power including remote disconnects before servicing" or approved equivalent.

B. Identification for Conductors and Cables:
1. Color Coding for Power Conductors 600 V and Less: Comply with Section 26 0519.
2. Use identification nameplate or identification label to identify color code for ungrounded and grounded power conductors inside door or enclosure at each piece of feeder or branch-circuit distribution equipment when premises has feeders or branch circuits served by more than one nominal voltage system.
3. Use wire and cable markers to identify circuit number or other designation indicated for power, control, and instrumentation conductors and cables at the following locations:
    a. At each source and load connection.
    b. Within boxes when more than one circuit is present.
    c. Within equipment enclosures when conductors and cables enter or leave the enclosure.
4. Use wire and cable markers to identify connected grounding electrode system components for grounding electrode conductors.
5. Use underground warning tape to identify direct buried cables.

C. Identification for Raceways:
1. Use voltage markers to identify highest voltage present for accessible conduits at maximum intervals of 20 feet.
2. Use voltage markers, color-coded bands, or factory-painted conduits to identify systems other than normal power system for accessible conduits.
    a. Maximum Intervals: 20 feet.
    b. Color-Coded Bands: Use field-painting or vinyl color coding electrical tape to mark bands 3 inches wide.
        1) Field-Painting: Comply with Section 09 9123 and 09 9113.

2) Vinyl Color Coding Electrical Tape: Comply with Section 26 0519.

c. Color Code:

3. Use identification labels, handwritten text using indelible marker, or plastic marker tags to identify circuits enclosed for accessible conduits at wall penetrations, at floor penetrations, at roof penetrations, and at equipment terminations when source is not within sight.
4. Use identification labels, handwritten text using indelible marker, or plastic marker tags to identify spare conduits at each end. Identify purpose and termination location.
5. Use underground warning tape to identify underground raceways.
6. Use voltage markers to identify highest voltage present for wireways at maximum intervals of 20 feet.

D. Identification for Boxes:
1. Use voltage markers to identify highest voltage present.
2. Use voltage markers or color coded boxes to identify systems other than normal power system.
a. Color-Coded Boxes: Field-painted in accordance with Section 09 9123 and 09 9113 per the same color code used for raceways.
b. For exposed boxes in public areas, do not color code.
3. Use identification labels or handwritten text using indelible marker to identify circuits enclosed.
a. For exposed boxes in public areas, use only identification labels.

E. Identification for Devices:
1. Wiring Device and Wallplate Finishes: Comply with Section 26 2726.
2. Factory Pre-Marked Wallplates: Comply with Section 26 2726.
3. Use identification label to identify fire alarm system devices.
4. Use identification label or engraved wallplate to identify load controlled for wall-mounted control devices controlling loads that are not visible from the control location and for multiple wall-mounted control devices installed at one location.

F. Identification for Luminaires:
1. Use permanent red dot on luminaire frame to identify luminaires connected to emergency power system.

1.02 IDENTIFICATION NAMEPLATES AND LABELS

A. Identification Nameplates:
1. Materials:
a. Indoor Clean, Dry Locations: Use plastic nameplates.
b. Outdoor Locations: Use plastic, stainless steel, or aluminum nameplates suitable for exterior use.
2. Plastic Nameplates: Two-layer or three-layer laminated acrylic or electrically non-conductive phenolic with beveled edges; minimum thickness of 1/16 inch; engraved text.
a. Exception: Provide minimum thickness of 1/8 inch when any dimension is greater than 4 inches.
3. Stainless Steel Nameplates: Minimum thickness of 1/32 inch; engraved or laser-etched text.
4. Aluminum Nameplates: Anodized; minimum thickness of 1/32 inch; engraved or laser-etched text.
5. Mounting Holes for Mechanical Fasteners: Two, centered on sides for sizes up to 1 inch high; Four, located at corners for larger sizes.

B. Identification Labels:
1. Materials: Use self-adhesive laminated plastic labels; UV, chemical, water, heat, and abrasion resistant.
2. Text: Use factory pre-printed or machine-printed text. Do not use handwritten text unless otherwise indicated.

C. Format for Equipment Identification:

1. Minimum Size: 1 inch by 2.5 inches.
2. Legend:
   a. System designation where applicable:
      1) Emergency Power System: Identify with text "EMERGENCY".
      2) Fire Alarm System: Identify with text "FIRE ALARM".
   b. Equipment designation or other approved description.
3. Text: All capitalized unless otherwise indicated.
4. Minimum Text Height:
   a. System Designation: 1 inch.
   b. Equipment Designation: 1/2 inch.
   c. Exception: Provide minimum text height of 1 inch for equipment located more than 10 feet above floor or working platform.
5. Color:
   a. Normal Power System: White text on black background.
   b. Emergency Power System: White text on red background.
   c. Fire Alarm System: White text on red background.

D. Format for General Information and Operating Instructions:
1. Minimum Size: 1 inch by 2.5 inches.
2. Legend: Include information or instructions indicated or as required for proper and safe operation and maintenance.
3. Text: All capitalized unless otherwise indicated.
4. Minimum Text Height: 1/4 inch.
5. Color: Black text on white background unless otherwise indicated.
   a. Exceptions:
      1) Provide white text on red background for general information or operational instructions for emergency systems.
      2) Provide white text on red background for general information or operational instructions for fire alarm systems.

E. Format for Caution and Warning Messages:
1. Minimum Size: 2 inches by 4 inches.
2. Legend: Include information or instructions indicated or as required for proper and safe operation and maintenance.
3. Text: All capitalized unless otherwise indicated.
4. Minimum Text Height: 1/2 inch.
5. Color: Black text on yellow background unless otherwise indicated.

F. Format for Receptacle Identification:
1. Minimum Size: 3/8 inch by 1.5 inches.
2. Legend: Power source and circuit number or other designation indicated.
   a. Include voltage and phase for other than 120 V, single phase circuits.
3. Text: All capitalized unless otherwise indicated.
4. Minimum Text Height: 3/16 inch.
5. Color: Black text on clear background.

G. Format for Control Device Identification:
1. Minimum Size: 3/8 inch by 1.5 inches.
2. Legend: Load controlled or other designation indicated.
3. Text: All capitalized unless otherwise indicated.
4. Minimum Text Height: 3/16 inch.
5. Color: Black text on clear background.

H. Format for Fire Alarm Device Identification:

1. Minimum Size: 3/8 inch by 1.5 inches.
2. Legend: Designation indicated and device zone or address.
3. Text: All capitalized unless otherwise indicated.
4. Minimum Text Height: 3/16 inch.
5. Color: Red text on white background.

1.03 WIRE AND CABLE MARKERS

A. Markers for Conductors and Cables: Use wrap-around self-adhesive vinyl self-laminating, heat-shrink sleeve, plastic sleeve, or vinyl split sleeve type markers suitable for the conductor or cable to be identified.

B. Markers for Conductor and Cable Bundles: Use plastic marker tags secured by nylon cable ties.

C. Legend: Power source and circuit number or other designation indicated.

D. Text: Use factory pre-printed or machine-printed text, all capitalized unless otherwise indicated.

E. Minimum Text Height: 1/8 inch.

F. Color: Black text on white background unless otherwise indicated.

1.04 VOLTAGE MARKERS

A. Markers for Conduits: Use factory pre-printed self-adhesive vinyl or vinyl snap-around type markers.

B. Markers for Boxes and Equipment Enclosures: Use factory pre-printed self-adhesive vinyl type markers.

C. Minimum Size:
1. Markers for Equipment: 1 1/8 by 4 1/2 inches.
2. Markers for Conduits: As recommended by manufacturer for conduit size to be identified.
3. Markers for Pull Boxes: 1 1/8 by 4 1/2 inches.
4. Markers for Junction Boxes: 1/2 by 2 1/4 inches.

D. Legend:
1. Markers for Voltage Identification: Highest voltage present.
2. Markers for System Identification:
a. Emergency Power System: Text "EMERGENCY".

E. Color: Black text on orange background unless otherwise indicated.

1.05 UNDERGROUND WARNING TAPE

A. Materials: Use foil-backed detectable type polyethylene tape suitable for direct burial, unless otherwise indicated.

B. Foil-backed Detectable Type Tape: 3 inches wide, with minimum thickness of 5 mil, unless otherwise required for proper detection.

C. Legend: Type of service, continuously repeated over full length of tape.

D. Color:
1. Tape for Buried Power Lines: Black text on red background.
2. Tape for Buried Communication, Alarm, and Signal Lines: Black text on orange background.

1.06 FLOOR MARKING TAPE

A. Floor Marking Tape for Equipment Working Clearance Identification: Self-adhesive vinyl or polyester tape with overlaminate, 3 inches wide, with alternating black and white stripes.

1.07 WARNING SIGNS AND LABELS

A. Comply with ANSI Z535.2 or ANSI Z535.4 as applicable.

B. Warning Signs:
1. Materials:
a. Indoor Dry, Clean Locations: Use factory pre-printed rigid plastic or self-adhesive vinyl signs.

b. Outdoor Locations: Use factory pre-printed rigid aluminum signs.

2. Rigid Signs: Provide four mounting holes at corners for mechanical fasteners.
3. Minimum Size: 7 by 10 inches unless otherwise indicated.

C. Warning Labels:

1. Materials: Use factory pre-printed or machine-printed self-adhesive polyester or self-adhesive vinyl labels; UV, chemical, water, heat, and abrasion resistant; produced using materials recognized to UL 969.
   a. Do not use labels designed to be completed using handwritten text.
2. Machine-Printed Labels: Use thermal transfer process printing machines and accessories recommended by label manufacturer.
3. Minimum Size: 2 by 4 inches unless otherwise indicated.

PART 3 EXECUTION

2.01 PREPARATION

A. Clean surfaces to receive adhesive products according to manufacturer's instructions.

2.02 INSTALLATION

A. Install products in accordance with manufacturer's instructions.

B. Install identification products to be plainly visible for examination, adjustment, servicing, and maintenance. Unless otherwise indicated, locate products as follows:

1. Surface-Mounted Equipment: Enclosure front.
2. Flush-Mounted Equipment: Inside of equipment door.
3. Free-Standing Equipment: Enclosure front; also enclosure rear for equipment with rear access.
4. Elevated Equipment: Legible from the floor or working platform.
5. Branch Devices: Adjacent to device.
6. Interior Components: Legible from the point of access.
7. Conduits: Legible from the floor.
8. Boxes: Outside face of cover.
9. Conductors and Cables: Legible from the point of access.
10. Devices: Outside face of cover.

C. Install identification products centered, level, and parallel with lines of item being identified.

D. Secure nameplates to exterior surfaces of enclosures using stainless steel screws and to interior surfaces using self-adhesive backing or epoxy cement.

E. Install self-adhesive labels and markers to achieve maximum adhesion, with no bubbles or wrinkles and edges properly sealed.

F. Install underground warning tape above buried lines with one tape per trench at 3 inches below finished grade.

G. Secure rigid signs using stainless steel screws.

H. Mark all handwritten text, where permitted, to be neat and legible.

2.03 FIELD QUALITY CONTROL

A. See Section 01 4000 - Quality Requirements, for additional requirements.

B. Replace self-adhesive labels and markers that exhibit bubbles, wrinkles, curling or other signs of improper adhesion.

END OF SECTION

SECTION 26 0573
POWER SYSTEM STUDIES

PART 1 GENERAL

1.01 SECTION INCLUDES

A. Short-circuit study.

B. Protective device coordination study.

C. Arc flash and shock risk assessment.
   1. Includes arc flash hazard warning labels.

D. Criteria for the selection and adjustment of equipment and associated protective devices not specified in this section, as determined by studies to be performed.

1.02 RELATED REQUIREMENTS

A. Section 26 0553 - Identification for Electrical Systems: Additional requirements for arc flash hazard warning labels.

B. Section 26 2100 - Low-Voltage Electrical Service Entrance.

C. Section 26 2416 - Panelboards.

D. Section 26 2813 - Fuses.

E. Section 26 2816.13 - Enclosed Circuit Breakers.

F. Section 26 2816.16 - Enclosed Switches.

G. Section 26 2913 - Enclosed Controllers.

1.03 REFERENCE STANDARDS

A. ANSI Z535.4 - American National Standard for Product Safety Signs and Labels 2011 (Reaffirmed 2017).

B. IEEE 141 - IEEE Recommended Practice for Electrical Power Distribution for Industrial Plants 1993 (Reaffirmed 1999).

C. IEEE 242 - IEEE Recommended Practice for Protection and Coordination of Industrial and Commercial Power Systems 2001, with Errata (2003).

D. IEEE 399 - IEEE Recommended Practice for Industrial and Commercial Power Systems Analysis 1997.

E. IEEE 551 - IEEE Recommended Practice for Calculating Short-Circuit Currents in Industrial and Commercial Power Systems 2006.

F. IEEE 1584 - IEEE Guide for Performing Arc-Flash Hazard Calculations 2018, with Errata (2019).

G. NEMA MG 1 - Motors and Generators 2021.

H. NETA ATS - Standard For Acceptance Testing Specifications For Electrical Power Equipment And Systems 2021.

I. NFPA 70 - National Electrical Code Most Recent Edition Adopted by Authority Having Jurisdiction, Including All Applicable Amendments and Supplements.

J. NFPA 70E - Standard for Electrical Safety in the Workplace 2021.

1.04 ADMINISTRATIVE REQUIREMENTS

A. Coordination:
   1. Existing Installations: Coordinate with equipment manufacturer(s) to obtain data necessary for completion of studies.
   2. Coordinate the work to provide equipment and associated protective devices complying with criteria for selection and adjustment, as determined by studies to be performed.

3. Notify Architect of any conflicts with or deviations from Contract Documents. Obtain direction before proceeding with work.

B. Sequencing:
1. Submit study reports prior to or concurrent with product submittals.
2. Do not order equipment until matching study reports and product submittals have both been evaluated by Architect.
3. Verify naming convention for equipment identification prior to creation of final drawings, reports, and arc flash hazard warning labels (where applicable).

C. Scheduling:
1. Arrange access to existing facility for data collection with Owner.
2. Where work of this section involves interruption of existing electrical service, arrange service interruption with Owner.

1.05 SUBMITTALS

A. Study reports, stamped or sealed and signed by study preparer.

B. Product Data: In addition to submittal requirements specified in other sections, include manufacturer's standard catalog pages and data sheets for equipment and protective devices indicating information relevant to studies.
1. Include characteristic time-current trip curves for protective devices.
2. Include impedance data for engine generators.
3. Identify modifications made in accordance with studies that:
a. Can be made at no additional cost to Owner.
b. As submitted will involve a change to the contract sum.

C. Field quality control reports.

D. Certification that field adjustable protective devices have been set in accordance with requirements of studies.

E. Project Record Documents: Revise studies as required to reflect as-built conditions.
1. Include hard copies with operation and maintenance data submittals.
2. Include computer software files used to prepare studies with file name(s) cross-referenced to specific pieces of equipment and systems.

1.06 POWER SYSTEM STUDIES

A. Scope of Studies:
1. Except where study descriptions below indicate exclusions, analyze system at each bus from primary protective devices of utility source down to each piece of equipment involved, including parts of system affecting calculations being performed (e.g. fault current contribution from motors).
2. Include in analysis alternate sources and operating modes (including known future configurations) to determine worst case conditions.

B. General Study Requirements:
1. Comply with NFPA 70.
2. Perform studies utilizing computer software complying with specified requirements; manual calculations are not permitted.

C. Data Collection:
1. Compile information on project-specific characteristics of actual installed equipment, protective devices, feeders, etc. as necessary to develop single-line diagram of electrical distribution system and associated input data for use in system modeling.
a. Utility Source Data: Include primary voltage, maximum and minimum three-phase and line-to-ground fault currents, impedance, X/R ratio, and primary protective device information.

1) Obtain up-to-date information from Utility Company.

b. Generators: Include manufacturer/model, kW and voltage ratings, and impedance.

c. Motors: Include manufacturer/model, type (e.g. induction, synchronous), horsepower rating, voltage rating, full load amps, and locked rotor current or NEMA MG 1 code letter designation.

d. Transformers: Include primary and secondary voltage ratings, kVA rating, winding configuration, percent impedance, and X/R ratio.

e. Protective Devices:

1) Circuit Breakers: Include manufacturer/model, type (e.g. thermal magnetic, electronic trip), frame size, trip rating, voltage rating, interrupting rating, available field-adjustable trip response settings, and features (e.g. zone selective interlocking).

2) Fuses: Include manufacturer/model, type/class (e.g. Class J), size/rating, and speed (e.g. time delay, fast acting).

f. Protective Relays: Include manufacturer/model, type, settings, current/potential transformer ratio, and associated protective device.

g. Conductors: Include feeder size, material (e.g. copper, aluminum), insulation type, voltage rating, number per phase, raceway type, and actual length.

2. Existing Installations:

a. Collect data on existing electrical distribution system necessary for completion of studies, including field verification of available existing data (e.g. construction documents, previous studies). Include actual settings for field-adjustable devices.

D. Short-Circuit Study:

1. Comply with IEEE 551 and applicable portions of IEEE 141, IEEE 242, and IEEE 399.

2. For purposes of determining equipment short circuit current ratings, consider conditions that may result in maximum available fault current, including but not limited to:

a. Maximum utility fault currents.

b. Maximum motor contribution.

c. Known operating modes (e.g. utility as source, generator as source, utility/generator in parallel, bus tie breaker open/close positions).

3. For each bus location, calculate the maximum available three-phase bolted symmetrical and asymmetrical fault currents. For grounded systems, also calculate the maximum available line-to-ground bolted fault currents.

E. Protective Device Coordination Study:

1. Comply with applicable portions of IEEE 242 and IEEE 399.

2. Analyze alternate scenarios considering known operating modes (e.g. utility as source, generator as source, utility/generator in parallel, bus tie breaker open/close positions).

3. Analyze protective devices and associated settings for suitable margins between time-current curves to provide adequate protection for equipment and conductors while achieving full selective coordination.

F. Arc Flash and Shock Risk Assessment:

1. Comply with NFPA 70E.

2. Perform incident energy and arc flash boundary calculations in accordance with IEEE 1584 (as referenced in NFPA 70E Annex D), where applicable.

a. Where reasonable, study preparer may assume a maximum clearing time of two seconds in accordance with IEEE 1584, provided that the conditions are such that a worker's egress from an arc flash event would not be inhibited.

b. For single-phase systems, study preparer to perform calculations assuming three-phase system in accordance with IEEE 1584 using single phase bolted fault current, yielding conservative results.

3. For equipment with main devices mounted in separate compartmentalized sections, perform calculations on both the line and load side of the main device.
4. Analyze alternate scenarios considering conditions that may result in maximum incident energy, including but not limited to:
    a. Maximum and minimum utility fault currents.
    b. Maximum and minimum motor contribution.
    c. Known operating modes (e.g. utility as source, generator as source, utility/generator in parallel, bus tie breaker open/close positions).

G. Study Reports:
1. General Requirements:
    a. Identify date of study and study preparer.
    b. Identify study methodology and software product(s) used.
    c. Identify scope of studies, assumptions made, implications of possible alternate scenarios, and any exclusions from studies.
    d. Identify base used for per unit values.
    e. Include single-line diagram and associated input data used for studies; identify buses on single-line diagram as referenced in reports, and indicate bus voltage.
    f. Include conclusions and recommendations.
2. Short-Circuit Study:
    a. For each scenario, identify at each bus location:
        1) Calculated maximum available symmetrical and asymmetrical fault currents (both three-phase and line-to-ground where applicable).
        2) Fault point X/R ratio.
        3) Associated equipment short circuit current ratings.
    b. Identify locations where the available fault current exceeds the equipment short circuit current rating, along with recommendations.
3. Protective Device Coordination Study:
    a. For each scenario, include time-current coordination curves plotted on log-log scale graphs.
    b. For each graph include (where applicable):
        1) Partial single-line diagram identifying the portion of the system illustrated.
        2) Protective Devices: Time-current curves with applicable tolerance bands for each protective device in series back to the source, plotted up to the maximum available fault current at the associated bus.
        3) Conductors: Damage curves.
        4) Transformers: Inrush points and damage curves.
        5) Generators: Full load current, overload curves, decrement curves, and short circuit withstand points.
        6) Motors: Full load current, starting curves, and damage curves.
        7) Capacitors: Full load current and damage curves.
    c. For each protective device, identify fixed and adjustable characteristics with available ranges and recommended settings.
        1) Circuit Breakers: Include long time pickup and delay, short time pickup and delay, and instantaneous pickup.
        2) Include ground fault pickup and delay.
        3) Include fuse ratings.
        4) Protective Relays: Include current/potential transformer ratios, tap, time dial, and instantaneous pickup.
    d. Identify cases where either full selective coordination or adequate protection is not achieved, along with recommendations.
4. Arc Flash and Shock Risk Assessment:

a. For the worst case for each scenario, identify at each bus location:
   1) Calculated incident energy and associated working distance.
   2) Calculated arc flash boundary.
   3) Bolted fault current.
   4) Arcing fault current.
   5) Clearing time.
   6) Arc gap distance.

b. For purposes of producing arc flash hazard warning labels, summarize the maximum incident energy and associated data reflecting the worst case condition of all scenarios at each bus location.

1.07 QUALITY ASSURANCE

A. Study Preparer Qualifications: Professional electrical engineer licensed in the State in which the Project is located and with minimum five years experience in preparation of studies of similar type and complexity using specified computer software.
   1. Study preparer may be employed by manufacturer of electrical distribution equipment.
   2. Study preparer may be employed by field testing agency.

B. Computer Software for Study Preparation: Use the latest edition of commercially available software utilizing specified methodologies.

PART 2 PRODUCTS

2.01 ARC FLASH HAZARD WARNING LABELS

A. Provide warning labels complying with ANSI Z535.4 to identify arc flash hazards for each work location analyzed by the arc flash and shock risk assessment.
   1. Materials: Comply with Section 26 0553.
   2. Legend: Provide custom legend in accordance with NFPA 70E based on equipment-specific data as determined by arc flash and shock risk assessment.
      a. Include the following information:
         1) Arc flash boundary.
         2) Available incident energy and corresponding working distance.
         3) Nominal system voltage.
         4) Limited approach boundary.
         5) Restricted approach boundary.
         6) Study preparer, report reference, and date calculations were performed.

PART 3 EXECUTION

3.01 INSTALLATION

A. Install arc flash warning labels in accordance with Section 26 0553.

3.02 FIELD QUALITY CONTROL

A. See Section 01 4000 - Quality Requirements, for additional requirements.

B. Provide the services of field testing agency or equipment manufacturer's representative to perform inspection, testing, and adjusting.

C. Inspect and test in accordance with NETA ATS, except Section 4.

D. Adjust equipment and protective devices for compliance with studies and recommended settings.

E. Notify Architect of any conflicts with or deviations from studies. Obtain direction before proceeding.

F. Submit detailed reports indicating inspection and testing results, and final adjusted settings.

3.03 CLOSEOUT ACTIVITIES

A. Training: Include as part of the base bid training for Owner's personnel on electrical safety pertaining to arc flash and shock hazards.
   1. Use site-specific arc flash and shock risk assessment report as training reference, supplemented with additional training materials as required.
   2. Instructor: Representative of entity performing study.
   3. Location: At project site.

END OF SECTION

SECTION 26 0583
WIRING CONNECTIONS

PART 1 GENERAL

1.01 SECTION INCLUDES

A. Electrical connections to equipment.

1.02 RELATED REQUIREMENTS

A. Section 26 0519 - Low-Voltage Electrical Power Conductors and Cables.

B. Section 26 0533.13 - Conduit for Electrical Systems.

C. Section 26 0533.16 - Boxes for Electrical Systems.

D. Section 26 2726 - Wiring Devices.

E. Section 26 2816.16 - Enclosed Switches.

F. Section 26 2913 - Enclosed Controllers.

1.03 REFERENCE STANDARDS

A. NEMA WD 1 - General Color Requirements for Wiring Devices 1999 (Reaffirmed 2020).

B. NEMA WD 6 - Wiring Devices - Dimensional Specifications 2016.

C. NFPA 70 - National Electrical Code Most Recent Edition Adopted by Authority Having Jurisdiction, Including All Applicable Amendments and Supplements.

1.04 ADMINISTRATIVE REQUIREMENTS

A. Coordination:
   1. Obtain and review shop drawings, product data, manufacturer's wiring diagrams, and manufacturer's instructions for equipment furnished under other sections.
   2. Determine connection locations and requirements.

B. Sequencing:
   1. Install rough-in of electrical connections before installation of equipment is required.
   2. Make electrical connections before required start-up of equipment.

1.05 SUBMITTALS

A. Product Data: Provide wiring device manufacturer’s catalog information showing dimensions, configurations, and construction.

B. Manufacturer's Instructions: Indicate application conditions and limitations of use stipulated by product testing agency. Include instructions for storage, handling, protection, examination, preparation, and installation of product.

1.06 QUALITY ASSURANCE

A. Comply with requirements of NFPA 70.

B. Products: Listed, classified, and labeled as suitable for the purpose intended.

C. Product Listing Organization Qualifications: An organization recognized by OSHA as a Nationally Recognized Testing Laboratory (NRTL) and acceptable to authorities having jurisdiction.

PART 2 PRODUCTS

2.01 MATERIALS

A. Cords and Caps: NEMA WD 6; match receptacle configuration at outlet provided for equipment.
   1. Colors: Comply with NEMA WD 1.
   2. Cord Construction: NFPA 70, Type SO, multiconductor flexible cord with identified equipment grounding conductor, suitable for use in damp locations.

3. Size: Suitable for connected load of equipment, length of cord, and rating of branch circuit overcurrent protection.

B. Disconnect Switches: As specified in Section 26 2816.16 and in individual equipment sections.

C. Wiring Devices: As specified in Section 26 2726.

D. Flexible Conduit: As specified in Section 26 0533.13.

E. Wire and Cable: As specified in Section 26 0519.

F. Boxes: As specified in Section 26 0533.16.

PART 3 EXECUTION

3.01 EXAMINATION

A. Verify that equipment is ready for electrical connection, wiring, and energization.

3.02 ELECTRICAL CONNECTIONS

A. Make electrical connections in accordance with equipment manufacturer's instructions.

B. Make conduit connections to equipment using flexible conduit. Use liquidtight flexible conduit with watertight connectors in damp or wet locations.

C. Connect heat producing equipment using wire and cable with insulation suitable for temperatures encountered.

D. Provide receptacle outlet to accommodate connection with attachment plug.

E. Provide cord and cap where field-supplied attachment plug is required.

F. Install suitable strain-relief clamps and fittings for cord connections at outlet boxes and equipment connection boxes.

G. Install disconnect switches, controllers, control stations, and control devices to complete equipment wiring requirements.

H. Install terminal block jumpers to complete equipment wiring requirements.

I. Install interconnecting conduit and wiring between devices and equipment to complete equipment wiring requirements.

END OF SECTION

SECTION 26 0923
LIGHTING CONTROL DEVICES

PART 1 GENERAL

1.01 SECTION INCLUDES

A. Occupancy sensors.

B. Outdoor photo controls.

C. Daylighting controls.

D. Lighting contactors.

E. Accessories.

1.02 RELATED REQUIREMENTS

A. Section 26 0526 - Grounding and Bonding for Electrical Systems.

B. Section 26 0529 - Hangers and Supports for Electrical Systems

C. Section 26 0533.16 - Boxes for Electrical Systems.

D. Section 26 0553 - Identification for Electrical Systems: Identification products and requirements.

E. Section 26 0573 - Power System Studies.

F. Section 26 2726 - Wiring Devices: Devices for manual control of lighting, including wall switches, wall dimmers, and fan speed controllers.

G. Section 26 2813 - Fuses.

H. Section 26 5100 - Interior Lighting.

I. Section 26 5600 - Exterior Lighting.

1.03 REFERENCE STANDARDS

A. 47 CFR 15 - Radio Frequency Devices current edition.

B. ANSI C136.10 - American National Standard for Roadway and Area Lighting Equipment - Locking-Type Photocontrol Devices and Mating Receptacles - Physical and Electrical Interchangeability and Testing 2017.

C. NECA 1 - Standard for Good Workmanship in Electrical Construction 2015.

D. NECA 130 - Standard for Installing and Maintaining Wiring Devices 2016.

E. NEMA 250 - Enclosures for Electrical Equipment (1000 Volts Maximum) 2020.

F. NEMA 410 - Performance Testing for Lighting Controls and Switching Devices with Electronic Drivers and Disharge Ballasts 2020.

G. NEMA ICS 2 - Industrial Control and Systems Controllers, Contactors and Overload Relays Rated 600 Volts 2008 (Reaffirmed 2020).

H. NEMA ICS 5 - Industrial Control and Systems: Control Circuit and Pilot Devices 2017.

I. NEMA ICS 6 - Industrial Control and Systems: Enclosures 1993 (Reaffirmed 2016).

J. NFPA 70 - National Electrical Code Most Recent Edition Adopted by Authority Having Jurisdiction, Including All Applicable Amendments and Supplements.

K. UL 773 - Plug-in, Locking Type Photocontrols for Use with Area Lighting Current Edition, Including All Revisions.

L. UL 773A - Nonindustrial Photoelectric Switches for Lighting Control Current Edition, Including All Revisions.

M. UL 1472 - Solid-State Dimming Controls Current Edition, Including All Revisions.

N. UL 60947-1 - Low-Voltage Switchgear and Controlgear - Part 1: General Rules Current Edition, Including All Revisions.

O. UL 60947-4-1 - Low-Voltage Switchgear and Controlgear - Part 4-1: Contactors and Motor-starters - Electromechanical Contactors and Motor-starters Current Edition, Including All Revisions.

1.04 ADMINISTRATIVE REQUIREMENTS

A. Coordination:
   1. Coordinate the placement of lighting control devices with millwork, furniture, equipment, etc. installed under other sections or by others.
   2. Coordinate the placement of wall switch occupancy sensors with actual installed door swings.
   3. Coordinate the placement of occupancy sensors with millwork, furniture, equipment or other potential obstructions to motion detection coverage installed under other sections or by others.
   4. Coordinate the placement of photo sensors for daylighting controls with windows, skylights, and luminaires to achieve optimum operation. Coordinate placement with ductwork, piping, equipment, or other potential obstructions to light level measurement installed under other sections or by others.
   5. Notify Architect of any conflicts or deviations from Contract Documents to obtain direction prior to proceeding with work.

1.05 SUBMITTALS

A. See Section 01 3000 - Administrative Requirements, for submittal procedures.

B. Product Data: Include ratings, configurations, standard wiring diagrams, dimensions, colors, service condition requirements, and installed features.
   1. Occupancy Sensors: Include detailed motion detection coverage range diagrams.

C. Shop Drawings:
   1. Occupancy Sensors: Provide lighting plan indicating location, model number, and orientation of each occupancy sensor and associated system component.
   2. Daylighting Controls: Provide lighting plan indicating location, model number, and orientation of each photo sensor and associated system component.

D. Field Quality Control Reports.

E. Project Record Documents: Record actual installed locations and settings for lighting control devices.

1.06 QUALITY ASSURANCE

A. Comply with requirements of NFPA 70.

B. Manufacturer Qualifications: Company specializing in manufacturing the products specified in this section with minimum three years documented experience.

C. Product Listing Organization Qualifications: An organization recognized by OSHA as a Nationally Recognized Testing Laboratory (NRTL) and acceptable to authorities having jurisdiction.

1.07 DELIVERY, STORAGE, AND PROTECTION

A. Store products in a clean, dry space in original manufacturer's packaging in accordance with manufacturer's written instructions until ready for installation.

1.08 FIELD CONDITIONS

A. Maintain field conditions within manufacturer's required service conditions during and after installation.

1.09 WARRANTY

A. Provide five year manufacturer warranty for all occupancy sensors.

B. Provide five year manufacturer warranty for utility grade locking receptacle-mounted outdoor photo controls.

C. Provide five year manufacturer warranty for all daylighting controls.

PART 2 PRODUCTS

2.01 LIGHTING CONTROL DEVICES - GENERAL REQUIREMENTS

A. Provide products listed, classified, and labeled as suitable for the purpose intended.

B. Unless specifically indicated to be excluded, provide all required conduit, wiring, connectors, hardware, components, accessories, etc. as required for a complete operating system.

C. Products for Switching of Electronic Ballasts/Drivers: Tested and rated to be suitable for peak inrush currents specified in NEMA 410.

2.02 OCCUPANCY SENSORS

A. All Occupancy Sensors:
   1. Description: Factory-assembled commercial specification grade devices for indoor use capable of sensing both major motion, such as walking, and minor motion, such as small desktop level movements, according to published coverage areas, for automatic control of load indicated.
   2. Sensor Technology:
      a. Passive Infrared (PIR) Occupancy Sensors: Designed to detect occupancy by sensing movement of thermal energy between zones.
      b. Ultrasonic Occupancy Sensors: Designed to detect occupancy by sensing frequency shifts in emitted and reflected inaudible sound waves.
      c. Passive Infrared/Ultrasonic Dual Technology Occupancy Sensors: Designed to detect occupancy using a combination of both passive infrared and ultrasonic technologies.
      d. Passive Infrared/Acoustic Dual Technology Occupancy Sensors: Designed to detect occupancy using a combination of both passive infrared and audible sound sensing technologies.
   3. Provide LED to visually indicate motion detection with separate color LEDs for each sensor type in dual technology units.
   4. Operation: Unless otherwise indicated, occupancy sensor to turn load on when occupant presence is detected and to turn load off when no occupant presence is detected during an adjustable turn-off delay time interval.
   5. Dual Technology Occupancy Sensors: Field configurable turn-on and hold-on activation with settings for activation by either or both sensing technologies.
   6. Turn-Off Delay: Field adjustable, with time delay settings up to 30 minutes.
   7. Sensitivity: Field adjustable.
   8. Compatibility (Non-Dimming Sensors): Suitable for controlling incandescent lighting, low-voltage lighting with electronic and magnetic transformers, fluorescent lighting with electronic and magnetic ballasts, and fractional motor loads, with no minimum load requirements.
   9. Load Rating for Line Voltage Occupancy Sensors: As required to control the load indicated on drawings.

B. Wall Switch Occupancy Sensors:
   1. All Wall Switch Occupancy Sensors:
      a. Description: Occupancy sensors designed for installation in standard wall box at standard wall switch mounting height with a field of view of 180 degrees, integrated manual control capability, and no leakage current to load in off mode.
      b. Unless otherwise indicated or required to control the load indicated on drawings, provide low voltage units, for use with separate compatible accessory power packs.
      c. Manual-Off Override Control: When used to turn off load while in automatic-on mode, unit to revert back to automatic mode after no occupant presence is detected during the delayed-off time interval.

2. Passive Infrared/Ultrasonic Dual Technology Wall Switch Occupancy Sensors: Capable of detecting motion within an area of 900 square feet.

C. Wall Dimmer Occupancy Sensors:
   1. General Requirements:
      a. Description: Occupancy sensors designed for installation in standard wall box at standard wall switch mounting height with a field of view of 180 degrees, integrated dimming control capability , and no leakage current to load in off mode.
      b. Dimmer: Solid-state with continuous full-range even control following square law dimming curve, integral radio frequency interference filtering, power failure preset memory, air gap switch accessible without removing wall plate, and listed as complying with UL 1472; type and rating suitable for load controlled.
      c. Provide field adjustable dimming preset for occupied state.
   2. Passive Infrared (PIR) Wall Dimmer Occupancy Sensors: Capable of detecting motion within an area of 900 square feet.

D. Ceiling Mounted Occupancy Sensors:
   1. All Ceiling Mounted Occupancy Sensors:
      a. Description: Low profile occupancy sensors designed for ceiling installation.
      b. Unless otherwise indicated or required to control the load indicated on drawings, provide low voltage units, for use with separate compatible accessory power packs.
   2. Passive Infrared/Ultrasonic Dual Technology Ceiling Mounted Occupancy Sensors:
      a. Standard Range Sensors: Capable of detecting motion within an area of 450 square feet at a mounting height of 9 feet, with a field of view of 360 degrees.
      b. Extended Range Sensors: Capable of detecting motion within an area of 1,200 square feet at a mounting height of 9 feet, with a field of view of 360 degrees.
   3. Passive Infrared/Acoustic Dual Technology Ceiling Mounted Occupancy Sensors:
      a. Standard Range Sensors: Capable of detecting motion within an area of 450 square feet at a mounting height of 9 feet, with a field of view of 360 degrees.
      b. Extended Range Sensors: Capable of detecting motion within an area of 1,200 square feet at a mounting height of 9 feet.

E. Directional Occupancy Sensors:
   1. All Directional Occupancy Sensors: Designed for wall or ceiling mounting, with integral swivel for field adjustment of motion detection coverage.
      a. Unless otherwise indicated or required to control the load indicated on drawings, provide low voltage units, for use with separate compatible accessory power packs.
   2. Passive Infrared (PIR) Directional Occupancy Sensors:
      a. Standard Range Sensors: Capable of detecting motion within a distance of 40 feet at a mounting height of 10 feet.
      b. Long Range Sensors: Capable of detecting motion within a distance of 80 feet at a mounting height of 10 feet.
   3. Passive Infrared/Ultrasonic Dual Technology Directional Occupancy Sensors: Capable of detecting motion within a distance of 40 feet at a mounting height of 10 feet.

F. Power Packs for Low Voltage Occupancy Sensors:
   1. Description: Plenum rated, self-contained low voltage class 2 transformer and relay compatible with specified low voltage occupancy sensors for switching of line voltage loads.
   2. Provide quantity and configuration of power and slave packs with all associated wiring and accessories as required to control the load indicated on drawings.
   3. Input Supply Voltage: Dual rated for 120/277 V ac.
   4. Load Rating: As required to control the load indicated on drawings.

G. Power Packs for Wireless Occupancy Sensors:

1. Description: Plenum rated, self-contained relay compatible with specified wireless occupancy sensors for switching of line voltage loads.
2. Input Supply Voltage: Dual rated for 120/277 V ac.
3. Load Rating: As required to control the load indicated on drawings.
4. Provide auxiliary contact closure output where indicated.
5. Rated Life of Relay: One million cycles.

2.03 OUTDOOR PHOTO CONTROLS

A. Stem-Mounted Outdoor Photo Controls:
1. Description: Direct-wired photo control unit with threaded conduit mounting stem and field-adjustable swivel base, listed and labeled as complying with UL 773A.
2. Housing: Weatherproof, impact resistant polycarbonate.
3. Photo Sensor: Cadmium sulfide.
4. Provide external sliding shield for field adjustment of light level activation.
5. Light Level Activation: 1 to 5 footcandles turn-on and 3 to 1 turn-off to turn-on ratio with delayed turn-off.
6. Voltage: As required to control the load indicated on the drawings.
7. Failure Mode: Fails to the on position.
8. Load Rating: As required to control the load indicated on the drawings.
9. Provide accessory wall-mounting bracket where indicated or as required to complete installation.

B. Locking Receptacle-Mounted Outdoor Photo Controls
1. Description: Plug-in locking type photo control unit complying with ANSI C136.10 for mounting on a compatible receptacle, listed and labeled as complying with UL 773.
2. Housing: Weatherproof, impact resistant UV stabilized polypropylene, color to be selected.
3. Photo Sensor: Cadmium sulfide.
4. Light Level Activation: 1 to 3 footcandles turn-on and 1.5 to 1 turn-off to turn-on ratio with instant turn-on and delayed turn-off.
5. Voltage: As required to control the load indicated on the drawings.
6. Failure Mode: Fails to the on position.
7. Load Rating: As required to control the load indicated on the drawings.
8. Surge Protection: 160 joule metal oxide varistor.
9. Provide the following accessories where indicated or as required to complete installation:
    a. Receptacle: Complying with ANSI C136.10.
    b. Mounting Bracket.
    c. Shorting Cap: Suitable for replacing locking photo control to complete circuit.

2.04 DAYLIGHTING CONTROLS

A. System Description: Control system consisting of photo sensors and compatible control modules and power packs, contactors, or relays as required for automatic control of load indicated according to available natural light; capable of integrating with occupancy sensors and manual override controls.

B. Daylighting Control Photo Sensors: Low voltage class 2 photo sensor units with output signal proportional to the measured light level and provision for zero or offset based signal.
1. Sensor Type: Filtered silicon photo diode.
2. Sensor Range:
    a. Indoor Photo Sensors: 5 to 100 footcandles.
    b. Outdoor Photo Sensors: 5 to 250 footcandles.
3. Where wired sensors are indicated, wireless sensors are not acceptable without prior approval of Architect.
4. Wireless Daylighting Control Photo Sensors:
    a. RF Range: 30 feet through typical construction materials.

b. Electromagnetic Interference/Radio Frequency Interference (EMI/RFI) Limits: Comply with FCC requirements of 47 CFR 15, for Class B application.
c. Power: Battery-operated with minimum ten-year battery life.

C. Daylighting Control Switching Modules for Low Voltage Sensors: Low voltage class 2 control unit compatible with specified photo sensors, for switching of compatible power packs, contactors, or relays in response to changes in measured light levels according to selected settings.
1. Operation: Unless otherwise indicated, load to be turned on when light level is below selected low set point and load to be turned off when light level is above selected high set point, with a no switching dead band between set points to prevent unwanted cycling.
2. Input Delay: To prevent unwanted cycling due to intermittent light level fluctuations.
3. Control Capability:
a. Single Zone Switching Modules: Capable of controlling one programmable channel.
b. Multi-Zone Switching Modules: Capable of controlling up to three separately programmable channels.

D. Daylighting Control Switching Modules for Wireless Sensors:
1. Description: Plenum rated, self-contained relay compatible with specified wireless photo sensors for switching of line voltage loads in response to changes in measured light levels according to selected settings.
2. Operation: Unless otherwise indicated, load to be turned on when light level is below selected low set point and load to be turned off when light level is above selected high set point, with a no switching dead band between set points to prevent unwanted cycling.
3. Input Delay: To prevent unwanted cycling due to intermittent light level fluctuations.
4. Control Capability: Capable of controlling one programmable channel.
5. Input Supply Voltage: Dual rated for 120/277 V ac.
6. Load Rating: As required to control the load indicated on drawings.

E. Daylighting Control Dimming Modules for Low Voltage Sensors: Low voltage class 2 control unit compatible with specified photo sensors and with specified dimming ballasts, for both continuous dimming of compatible dimming ballasts and switching of compatible power packs, contactors, or relays in response to changes in measured light levels according to selected settings.
1. Operation: Unless otherwise indicated, specified load to be continuously brightened as not enough daylight becomes available and continuously dimmed as enough daylight becomes available.
2. Control Capability: Capable of controlling up to three separately programmable channels, with up to 50 ballasts per channel.
3. Dimming and Fade Rates: Adjustable from 5 to 60 seconds.
4. Cut-Off Delay: Selectable and adjustable from 0 to 20 minutes.

F. Daylighting Control Dimming Modules for Wireless Sensors:
1. Description: Plenum rated control unit compatible with specified wireless photo sensors and with specified dimming ballasts, for continuous dimming of compatible dimming ballasts in response to changes in measured light levels according to selected settings.
2. Operation: Unless otherwise indicated, specified load to be continuously brightened as not enough daylight becomes available and continuously dimmed as enough daylight becomes available.
3. Load to be turned off when available daylight is sufficient to fully dim the load, after the selected time delay.
4. Control Capability: Capable of controlling up to 32 ballasts with up to two separately programmable daylighting zones.

G. Power Packs for Low Voltage Daylighting Control Modules:
1. Description: Plenum rated, self-contained low voltage class 2 transformer and relay compatible with specified low voltage daylighting control modules for switching of line voltage loads. Provide

quantity and configuration of power and slave packs with all associated wiring and accessories as required to control the load indicated on drawings.

2. Input Supply Voltage: Dual rated for 120/277 V ac.
3. Load Ratings: As required to control the load indicated on drawings.

H. Accessories:
1. Where indicated, provide compatible accessory wall switches for manual override control.
2. Where indicated, provide compatible accessory wireless controls for manual override control.

2.05 LIGHTING CONTACTORS

A. Description: Magnetic lighting contactors complying with NEMA ICS 2, and listed and labeled as complying with UL 60947-1 and UL 60947-4-1; noncombination type unless otherwise indicated; ratings, configurations and features as indicated on the drawings.

B. Combination Contactors: NEMA ICS 2, Class A combination controllers with magnetic contactor(s) and externally operable disconnect.
1. Disconnects: Circuit breaker type.
a. Provide externally operable handle with means for locking in the OFF position. Provide safety interlock to prevent opening the cover with the disconnect in the ON position with capability of overriding interlock for testing purposes.
b. Provide auxiliary interlock for disconnection of external control power sources where applicable.

C. Short Circuit Current Rating:
1. Provide contactors with listed short circuit current rating not less than the available fault current at the installed location as indicated on the drawings.

D. Enclosures:
1. Comply with NEMA ICS 6.
2. Environment Type per NEMA 250: Unless otherwise indicated, as specified for the following installation locations:
a. Indoor Clean, Dry Locations: Type 1 or Type 12.
b. Outdoor Locations: Type 3R or Type 4.
3. Finish: Manufacturer's standard unless otherwise indicated.

2.06 ACCESSORIES

A. Auxiliary Contacts:
1. Comply with NEMA ICS 5.
2. Provide number and type of contacts indicated or required to perform necessary functions, including holding (seal-in) circuit and interlocking, plus one normally open (NO) and one normally closed (NC) spare contact for each lighting contactor, minimum.

B. Control and Timing Relays:
1. Comply with NEMA ICS 5.
2. Provide number and type of relays indicated or required to perform necessary functions.
3. Timing Relays: Electronic.
a. Adjustable Timing Range: As required for application.

C. Fire-Rated Device Enclosures:
1. Provide as required to preserve fire resistance rating of building elements.

PART 3 EXECUTION

3.01 EXAMINATION

A. Verify that field measurements are as indicated.

B. Verify that outlet boxes are installed in proper locations and at proper mounting heights and are properly sized to accommodate devices and conductors in accordance with NFPA 70.

C. Verify that openings for outlet boxes are neatly cut and will be completely covered by devices or wall plates.

D. Verify that final surface finishes are complete, including painting.

E. Verify that branch circuit wiring installation is completed, tested, and ready for connection to lighting control devices.

F. Verify that the service voltage and ratings of lighting control devices are appropriate for the service voltage and load requirements at the location to be installed.

G. Verify that conditions are satisfactory for installation prior to starting work.

3.02 PREPARATION

A. Provide extension rings to bring outlet boxes flush with finished surface.

B. Clean dirt, debris, plaster, and other foreign materials from outlet boxes.

3.03 INSTALLATION

A. Install lighting control devices in accordance with NECA 1 (general workmanship) and, where applicable, NECA 130, including mounting heights specified in those standards unless otherwise indicated.

B. Coordinate locations of outlet boxes provided under Section 26 0533.16 as required for installation of lighting control devices provided under this section.
   1. Mounting Heights: Unless otherwise indicated, as follows:
      a. Wall Switch Occupancy Sensors: 48 inches above finished floor.
   2. Orient outlet boxes for vertical installation of lighting control devices unless otherwise indicated.

C. Install lighting control devices in accordance with manufacturer's instructions.

D. Unless otherwise indicated, connect lighting control device grounding terminal or conductor to branch circuit equipment grounding conductor and to outlet box with bonding jumper.

E. Install lighting control devices plumb and level, and held securely in place.

F. Where required and not furnished with lighting control device, provide wall plate in accordance with Section 26 2726.

G. Provide required supports in accordance with Section 26 0529.

H. Where applicable, install lighting control devices and associated wall plates to fit completely flush to mounting surface with no gaps and rough opening completely covered without strain on wall plate. Repair or reinstall improperly installed outlet boxes or improperly sized rough openings. Do not use oversized wall plates in lieu of meeting this requirement.

I. Identify lighting control devices in accordance with Section 26 0553.

J. Occupancy Sensor Locations:
   1. Location Adjustments: Locations indicated are diagrammatic and only intended to indicate which rooms or areas require devices. Provide quantity and locations as required for complete coverage of respective room or area based on manufacturer's recommendations for installed devices.
   2. Locate ultrasonic and dual technology passive infrared/ultrasonic occupancy sensors a minimum of 4 feet from air supply ducts or other sources of heavy air flow and as per manufacturer's recommendations, in order to minimize false triggers.

K. Outdoor Photo Control Locations:
   1. Where possible, locate outdoor photo controls with photo sensor facing north. If north facing photo sensor is not possible, install with photo sensor facing east, west, or down.
   2. Locate outdoor photo controls so that photo sensors do not face artificial light sources, including light sources controlled by the photo control itself.

L. Install outdoor photo controls so that connections are weatherproof. Do not install photo controls with conduit stem facing up in order to prevent infiltration of water into the photo control.

M. Daylighting Control Photo Sensor Locations:
   1. Location Adjustments: Locations indicated are diagrammatic and only intended to indicate which rooms or areas require devices. Provide quantity and locations as required for proper control of respective room or area based on manufacturer's recommendations for installed devices.
   2. Unless otherwise indicated, locate photo sensors for closed loop systems to accurately measure the light level controlled at the designated task location, while minimizing the measured amount of direct light from natural or artificial sources such as windows or pendant luminaires.
   3. Unless otherwise indicated, locate photo sensors for open loop systems to accurately measure the level of daylight coming into the space, while minimizing the measured amount of lighting from artificial sources.

N. Combination Enclosed Lighting Contactors:
   1. Except where indicated to be mounted adjacent to the equipment they supply, mount lighting contactors such that the highest position of the operating handle does not exceed 79 inches above the floor or working platform.

O. Lamp Burn-In: Operate lamps at full output for minimum of 100 hours or prescribed period per manufacturer's recommendations prior to use with any dimming controls. Replace lamps that fail prematurely due to improper lamp burn-in.

P. Unless otherwise indicated, install power packs for lighting control devices above accessible ceiling or above access panel in inaccessible ceiling near the sensor location.

Q. Where indicated, install separate compatible wall switches for manual control interface with lighting control devices or associated power packs.

3.04 FIELD QUALITY CONTROL

A. See Section 01 4000 - Quality Requirements, for additional requirements.

B. Inspect each lighting control device for damage and defects.

C. Test occupancy sensors to verify proper operation, including time delays and ambient light thresholds where applicable. Verify optimal coverage for entire room or area. Record test results in written report to be included with submittals.

D. Test time switches to verify proper operation.

E. Test outdoor photo controls to verify proper operation, including time delays where applicable.

F. Test daylighting controls to verify proper operation, including light level measurements and time delays where applicable. Record test results in written report to be included with submittals.

G. Correct wiring deficiencies and replace damaged or defective lighting control devices.

3.05 ADJUSTING

A. Adjust devices and wall plates to be flush and level.

B. Adjust occupancy sensor settings to minimize undesired activations while optimizing energy savings, and to achieve desired function as indicated or as directed by Architect.

C. Adjust position of directional occupancy sensors and outdoor motion sensors to achieve optimal coverage as required.

D. Where indicated or as directed by Architect, install factory masking material or adjust integral blinders on passive infrared (PIR) and dual technology occupancy sensor lenses to block undesired motion detection.

E. Adjust time switch settings to achieve desired operation schedule as indicated or as directed by Architect. Record settings in written report to be included with submittals.

F. Adjust external sliding shields on outdoor photo controls under optimum lighting conditions to achieve desired turn-on and turn-off activation as indicated or as directed by Architect.

G. Adjust daylighting controls under optimum lighting conditions after all room finishes, furniture, and window treatments have been installed to achieve desired operation as indicated or as directed by Architect. Record settings in written report to be included with submittals. Readjust controls calibrated prior to installation of final room finishes, furniture, and window treatments that do not function properly as determined by Architect.

3.06 CLEANING

A. Clean exposed surfaces to remove dirt, paint, or other foreign material and restore to match original factory finish.

3.07 CLOSEOUT ACTIVITIES

A. Demonstration: Demonstrate proper operation of lighting control devices to Architect, and correct deficiencies or make adjustments as directed.

B. Training: Train Owner's personnel on operation, adjustment, programming, and maintenance of lighting control devices.
   1. Use operation and maintenance manual as training reference, supplemented with additional training materials as required.
   2. Provide minimum of two hours of training.
   3. Instructor: Qualified contractor familiar with the project and with sufficient knowledge of the installed lighting control devices.
   4. Location: At project site.

END OF SECTION

SECTION 26 2100
LOW-VOLTAGE ELECTRICAL SERVICE ENTRANCE

PART 1 GENERAL

1.01 SECTION INCLUDES

A. Electrical service requirements.

1.02 RELATED REQUIREMENTS

A. Section 26 0519 - Low-Voltage Electrical Power Conductors and Cables.

B. Section 26 0526 - Grounding and Bonding for Electrical Systems.

C. Section 26 0529 - Hangers and Supports for Electrical Systems.

D. Section 26 0533.13 - Conduit for Electrical Systems.

E. Section 26 0553 - Identification for Electrical Systems: Identification products and requirements.

F. Section 26 2416 - Panelboards: Service entrance equipment.

G. Section 26 2713 - Electricity Metering: Non-utility electrical metering.

H. Section 26 4300 - Surge Protective Devices: Service entrance surge protective devices.

1.03 DEFINITIONS

A. Service Point: The point of connection between the facilities of the serving utility and the premises wiring as defined in NFPA 70, and as designated by the Utility Company.

1.04 REFERENCE STANDARDS

A. IEEE C2 - National Electrical Safety Code(R) (NESC(R)) 2023.

B. NECA 1 - Standard for Good Workmanship in Electrical Construction 2015.

C. NFPA 70 - National Electrical Code Most Recent Edition Adopted by Authority Having Jurisdiction, Including All Applicable Amendments and Supplements.

1.05 ADMINISTRATIVE REQUIREMENTS

A. No later than two weeks following date of the Agreement, notify Utility Company of anticipated date of service.

B. Coordination:
   1. Verify the following with Utility Company representative:
      a. Utility Company requirements, including division of responsibility.
      b. Exact location and details of utility point of connection.
      c. Utility easement requirements.
      d. Utility Company charges associated with providing service.
   2. Coordinate the work with other trades to avoid placement of other utilities or obstructions within the spaces dedicated for electrical service and associated equipment.
   3. Coordinate arrangement of service entrance equipment with the dimensions and clearance requirements of the actual equipment to be installed.
   4. Coordinate the work with other installers to provide communication lines required for Utility Company meters.
   5. Notify Architect of any conflicts with or deviations from Contract Documents. Obtain direction before proceeding with work.

C. Arrange for Utility Company to provide permanent electrical service. Prepare and submit documentation required by Utility Company.

D. Utility Company charges associated with providing permanent service to be paid by Owner.

E. Preinstallation Meeting: Convene one week prior to commencing work of this section to review service requirements and details with Utility Company representative.

F. Scheduling:
   1. Where work of this section involves interruption of existing electrical service, arrange service interruption with Owner.
   2. Arrange for inspections necessary to obtain Utility Company approval of installation.

1.06 SUBMITTALS

A. Project Record Documents: Record actual locations of equipment and installed service routing.

1.07 QUALITY ASSURANCE

A. Comply with the following:
   1. IEEE C2 (National Electrical Safety Code).
   2. NFPA 70 (National Electrical Code).
   3. The requirements of the Utility Company.
   4. The requirements of the local authorities having jurisdiction.

B. Products: Listed, classified, and labeled as suitable for the purpose intended.

C. Product Listing Organization Qualifications: An organization recognized by OSHA as a Nationally Recognized Testing Laboratory (NRTL) and acceptable to authorities having jurisdiction.

1.08 DELIVERY, STORAGE, AND HANDLING

A. Receive, inspect, handle, and store products in accordance with manufacturer's instructions.

B. Store products indoors in a clean, dry space having a uniform temperature to prevent condensation (including outdoor rated products which are not weatherproof until completely and properly installed). Maintain factory wrapping or provide an additional heavy canvas or heavy plastic cover to protect units from dirt, water, construction debris, and traffic.

C. Handle products carefully to avoid damage to internal components, enclosure, and finish.

PART 2 PRODUCTS

2.01 ELECTRICAL SERVICE REQUIREMENTS

A. Provide new electrical service consisting of all required conduits, conductors, equipment, metering provisions, supports, accessories, etc. as necessary for connection between Utility Company point of supply and service entrance equipment.

B. Electrical Service Characteristics: As indicated on drawings.

C. Division of Responsibility: As indicated on drawings.

D. Products Furnished by Contractor: Comply with Utility Company requirements.

PART 3 EXECUTION

3.01 EXAMINATION

A. Verify that field measurements are as indicated.

B. Verify that ratings and configurations of service entrance equipment are consistent with the indicated requirements.

C. Verify that conditions are satisfactory for installation prior to starting work.

3.02 PREPARATION

A. Verify and mark locations of existing underground utilities.

3.03 INSTALLATION

A. Install products in accordance with manufacturer's instructions and Utility Company requirements.

B. Perform work in accordance with NECA 1 (general workmanship).

C. Arrange equipment to provide minimum clearances and required maintenance access.

D. Provide required protective bollards in accordance with Utility Company requirements.

E. Provide required support and attachment components in accordance with Section 26 0529.

F. Provide grounding and bonding for service entrance equipment in accordance with Section 26 0526.

G. Identify service entrance equipment, including main service disconnect(s) in accordance with Section 26 0553.

3.04 PROTECTION

A. Protect installed equipment from subsequent construction operations.

END OF SECTION

SECTION 26 2416
PANELBOARDS

PART 1 GENERAL

1.01 SECTION INCLUDES

A. Power distribution panelboards.

B. Lighting and appliance panelboards.

C. Overcurrent protective devices for panelboards.

1.02 RELATED REQUIREMENTS

A. Section 03 3000 - Cast-in-Place Concrete: Concrete equipment pads.

B. Section 26 0526 - Grounding and Bonding for Electrical Systems.

C. Section 26 0529 - Hangers and Supports for Electrical Systems.

D. Section 26 0553 - Identification for Electrical Systems: Identification products and requirements.

E. Section 26 0573 - Power System Studies: Additional criteria for the selection and adjustment of equipment and associated protective devices specified in this section.

F. Section 26 2200 - Low-Voltage Transformers: Small power centers with integral primary breaker, transformer, and panelboard.

G. Section 26 4300 - Surge Protective Devices.

1.03 REFERENCE STANDARDS

A. FS W-C-375 - Circuit Breakers, Molded Case; Branch Circuit and Service 2013e (Amended 2017).

B. NECA 1 - Standard for Good Workmanship in Electrical Construction 2015.

C. NECA 407 - Standard for Installing and Maintaining Panelboards 2015.

D. NEMA 250 - Enclosures for Electrical Equipment (1000 Volts Maximum) 2020.

E. NEMA ICS 2 - Industrial Control and Systems Controllers, Contactors and Overload Relays Rated 600 Volts 2008 (Reaffirmed 2020).

F. NEMA PB 1 - Panelboards 2011.

G. NEMA PB 1.1 - General Instructions for Proper Installation, Operation and Maintenance of Panelboards Rated 600 Volts or Less 2013.

H. NETA ATS - Standard For Acceptance Testing Specifications For Electrical Power Equipment And Systems 2021.

I. NFPA 70 - National Electrical Code Most Recent Edition Adopted by Authority Having Jurisdiction, Including All Applicable Amendments and Supplements.

J. UL 50 - Enclosures for Electrical Equipment, Non-Environmental Considerations Current Edition, Including All Revisions.

K. UL 50E - Enclosures for Electrical Equipment, Environmental Considerations Current Edition, Including All Revisions.

L. UL 67 - Panelboards Current Edition, Including All Revisions.

M. UL 489 - Molded-Case Circuit Breakers, Molded-Case Switches and Circuit Breaker Enclosures Current Edition, Including All Revisions.

N. UL 869A - Reference Standard for Service Equipment Current Edition, Including All Revisions.

O. UL 943 - Ground-Fault Circuit-Interrupters Current Edition, Including All Revisions.

P. UL 1053 - Ground-Fault Sensing and Relaying Equipment Current Edition, Including All Revisions.

Q. UL 1699 - Arc-Fault Circuit-Interrupters Current Edition, Including All Revisions.

1.04 ADMINISTRATIVE REQUIREMENTS

A. Coordination:
1. Coordinate the work with other trades to avoid placement of ductwork, piping, equipment, or other potential obstructions within the dedicated equipment spaces and working clearances for electrical equipment required by NFPA 70.
2. Coordinate arrangement of electrical equipment with the dimensions and clearance requirements of the actual equipment to be installed.
3. Coordinate the work with other trades to provide walls suitable for installation of flush-mounted panelboards where indicated.
4. Verify with manufacturer that conductor terminations are suitable for use with the conductors to be installed.
5. Notify Architect of any conflicts with or deviations from Contract Documents. Obtain direction before proceeding with work.

1.05 SUBMITTALS

A. See Section 01 3000 - Administrative Requirements, for submittal procedures.

B. Product Data: Provide manufacturer's standard catalog pages and data sheets for panelboards, enclosures, overcurrent protective devices, and other installed components and accessories.

1.06 QUALITY ASSURANCE

A. Comply with requirements of NFPA 70.

B. Manufacturer Qualifications: Company specializing in manufacturing the products specified in this section with minimum three years documented experience.

C. Product Listing Organization Qualifications: An organization recognized by OSHA as a Nationally Recognized Testing Laboratory (NRTL) and acceptable to authorities having jurisdiction.

1.07 DELIVERY, STORAGE, AND HANDLING

A. Receive, inspect, handle, and store panelboards in accordance with manufacturer's instructions and NECA 407.

B. Store in a clean, dry space. Maintain factory wrapping or provide an additional heavy canvas or heavy plastic cover to protect units from dirt, water, construction debris, and traffic.

C. Handle carefully in accordance with manufacturer's written instructions to avoid damage to panelboard internal components, enclosure, and finish.

1.08 FIELD CONDITIONS

A. Maintain ambient temperature within the following limits during and after installation of panelboards:
1. Panelboards Containing Circuit Breakers: Between 23 degrees F and 104 degrees F.

PART 2 PRODUCTS

2.01 PANELBOARDS - GENERAL REQUIREMENTS

A. Provide products listed, classified, and labeled as suitable for the purpose intended.

B. Unless otherwise indicated, provide products suitable for continuous operation under the following service conditions:
1. Altitude: Less than 6,600 feet.
2. Ambient Temperature:
a. Panelboards Containing Circuit Breakers: Between 23 degrees F and 104 degrees F.

C. Short Circuit Current Rating:

1. Provide panelboards with listed short circuit current rating not less than the available fault current at the installed location as determined by short circuit study performed in accordance with Section 26 0573.
2. Listed series ratings are not acceptable.

D. Panelboards Used for Service Entrance: Listed and labeled as suitable for use as service equipment according to UL 869A.

E. Mains: Configure for top or bottom incoming feed as indicated or as required for the installation.

F. Branch Overcurrent Protective Devices: Replaceable without disturbing adjacent devices.

G. Bussing: Sized in accordance with UL 67 temperature rise requirements.
1. Provide fully rated neutral bus unless otherwise indicated, with a suitable lug for each feeder or branch circuit requiring a neutral connection.
2. Provide solidly bonded equipment ground bus in each panelboard, with a suitable lug for each feeder and branch circuit equipment grounding conductor.

H. Conductor Terminations: Suitable for use with the conductors to be installed.

I. Enclosures: Comply with NEMA 250, and list and label as complying with UL 50 and UL 50E.
1. Environment Type per NEMA 250: Unless otherwise indicated, as specified for the following installation locations:
   a. Indoor Clean, Dry Locations: Type 1.
   b. Outdoor Locations: Type 3R.
2. Boxes: Galvanized steel unless otherwise indicated.
   a. Provide wiring gutters sized to accommodate the conductors to be installed.
3. Fronts:
   a. Fronts for Surface-Mounted Enclosures: Same dimensions as boxes.
   b. Fronts for Flush-Mounted Enclosures: Overlap boxes on all sides to conceal rough opening.
4. Lockable Doors: All locks keyed alike unless otherwise indicated.

J. Future Provisions: Prepare all unused spaces for future installation of devices including bussing, connectors, mounting hardware and all other required provisions.

K. Surge Protective Devices: Where factory-installed, internally mounted surge protective devices are provided in accordance with Section 26 4300, list and label panelboards as a complete assembly including surge protective device.

L. Panelboard Contactors: Where panelboard contactors are indicated, provide electrically operated, mechanically held magnetic contactor complying with NEMA ICS 2.
1. Ampere Rating: Not less than ampere rating of panelboard bus.
2. Short Circuit Current Rating: Not less than the panelboard short circuit current rating.
3. Coil Voltage: As required for connection to control system indicated.

M. Ground Fault Protection: Where ground-fault protection is indicated, provide system listed and labeled as complying with UL 1053.

N. Selectivity: Where the requirement for selectivity is indicated, furnish products as required to achieve selective coordination.

O. Multi-Section Panelboards: Provide enclosures of the same height, with feed-through lugs or sub-feed lugs and feeders as indicated or as required to interconnect sections.

P. Load centers are not acceptable.

Q. Provide the following features and accessories where indicated or where required to complete installation:
1. Feed-through lugs.
2. Sub-feed lugs.

2.02 POWER DISTRIBUTION PANELBOARDS

A. Description: Panelboards complying with NEMA PB 1, power and feeder distribution type, circuit breaker type, and listed and labeled as complying with UL 67; ratings, configurations and features as indicated on the drawings.

B. Conductor Terminations:
   1. Main and Neutral Lug Material: Copper, suitable for terminating copper conductors only.
   2. Main and Neutral Lug Type: Mechanical.

C. Bussing:
   1. Phase and Neutral Bus Material: Copper.
   2. Ground Bus Material: Copper.

D. Circuit Breakers:
   1. Provide bolt-on type or plug-in type secured with locking mechanical restraints.
   2. Provide thermal magnetic circuit breakers unless otherwise indicated.
   3. Provide electronic trip circuit breakers where indicated.

E. Enclosures:
   1. Provide surface-mounted enclosures unless otherwise indicated.
   2. Fronts: Provide door-in-door trim with hinged cover for access to load terminals and wiring gutters, and separate lockable hinged door with concealed hinges for access to overcurrent protective device handles without exposing live parts.
   3. Provide clear plastic circuit directory holder mounted on inside of door.

2.03 LIGHTING AND APPLIANCE PANELBOARDS

A. Description: Panelboards complying with NEMA PB 1, lighting and appliance branch circuit type, circuit breaker type, and listed and labeled as complying with UL 67; ratings, configurations and features as indicated on the drawings.

B. Conductor Terminations:
   1. Main and Neutral Lug Material: Copper, suitable for terminating copper conductors only.
   2. Main and Neutral Lug Type: Mechanical.

C. Bussing:
   1. Phase Bus Connections: Arranged for sequential phasing of overcurrent protective devices.
   2. Phase and Neutral Bus Material: Copper.
   3. Ground Bus Material: Copper.

D. Circuit Breakers: Thermal magnetic bolt-on type unless otherwise indicated.

E. Enclosures:
   1. Provide surface-mounted or flush-mounted enclosures as indicated.
   2. Provide clear plastic circuit directory holder mounted on inside of door.

2.04 OVERCURRENT PROTECTIVE DEVICES

A. Molded Case Circuit Breakers:
   1. Description: Quick-make, quick-break, over center toggle, trip-free, trip-indicating circuit breakers listed and labeled as complying with UL 489, and complying with FS W-C-375 where applicable; ratings, configurations, and features as indicated on the drawings.
   2. Interrupting Capacity:
      a. Provide circuit breakers with interrupting capacity as required to provide the short circuit current rating indicated, but not less than:
      b. Fully Rated Systems: Provide circuit breakers with interrupting capacity not less than the short circuit current rating indicated.
   3. Conductor Terminations:

a. Provide mechanical lugs unless otherwise indicated.
b. Lug Material: Copper, suitable for terminating copper conductors only.

4. Thermal Magnetic Circuit Breakers: For each pole, furnish thermal inverse time tripping element for overload protection and magnetic instantaneous tripping element for short circuit protection.
   a. Provide field-adjustable magnetic instantaneous trip setting for circuit breaker frame sizes 225 amperes and larger.
   b. Provide interchangeable trip units where indicated.
5. Electronic Trip Circuit Breakers: Furnish solid state, microprocessor-based, true rms sensing trip units.
   a. Provide the following field-adjustable trip response settings:
      1) Long time pickup, adjustable by replacing interchangeable trip unit or by setting dial.
      2) Long time delay.
      3) Short time pickup and delay.
      4) Instantaneous pickup.
      5) Ground fault pickup and delay where ground fault protection is indicated.
6. Multi-Pole Circuit Breakers: Furnish with common trip for all poles.
7. Provide the following circuit breaker types where indicated:
   a. Ground Fault Circuit Interrupter (GFCI) Circuit Breakers: Listed as complying with UL 943, class A for protection of personnel.
   b. Ground Fault Equipment Protection Circuit Breakers: Designed to trip at 30 mA for protection of equipment.
   c. Arc-Fault Circuit Interrupter (AFCI) Circuit Breakers: Combination type listed as complying with UL 1699.
   d. 100 Percent Rated Circuit Breakers: Listed for application within the panelboard where installed at 100 percent of the continuous current rating.
8. Provide listed switching duty rated circuit breakers with SWD marking for all branch circuits serving fluorescent lighting.
9. Provide listed high intensity discharge lighting rated circuit breakers with HID marking for all branch circuits serving HID lighting.
10. Do not use tandem circuit breakers.
11. Do not use handle ties in lieu of multi-pole circuit breakers.
12. Provide multi-pole circuit breakers for multi-wire branch circuits as required by NFPA 70.
13. Provide the following features and accessories where indicated or where required to complete installation:
    a. Shunt Trip: Provide coil voltage as required for connection to indicated trip actuator.
    b. Handle Pad-Lock Provision: For locking circuit breaker handle in OFF position.

2.05 SOURCE QUALITY CONTROL

A. Factory test panelboards according to NEMA PB 1.

PART 3 EXECUTION

3.01 EXAMINATION

A. Verify that field measurements are as indicated.

B. Verify that the ratings and configurations of the panelboards and associated components are consistent with the indicated requirements.

C. Verify that mounting surfaces are ready to receive panelboards.

D. Verify that conditions are satisfactory for installation prior to starting work.

3.02 INSTALLATION

A. Perform work in accordance with NECA 1 (general workmanship).

B. Install products in accordance with manufacturer's instructions.

C. Install panelboards in accordance with NECA 407 and NEMA PB 1.1.

D. Arrange equipment to provide minimum clearances in accordance with manufacturer's instructions and NFPA 70.

E. Provide required support and attachment in accordance with Section 26 0529.

F. Install panelboards plumb.

G. Install flush-mounted panelboards so that trims fit completely flush to wall with no gaps and rough opening completely covered.

H. Mount panelboards such that the highest position of any operating handle for circuit breakers or switches does not exceed 79 inches above the floor or working platform.

I. Mount floor-mounted power distribution panelboards on properly sized 4 inch high concrete pad constructed in accordance with Section 03 3000.

J. Provide minimum of six spare 1 inch trade size conduits out of each flush-mounted panelboard stubbed into accessible space above ceiling.

K. Provide grounding and bonding in accordance with Section 26 0526.

L. Install all field-installed branch devices, components, and accessories.

M. Where accessories are not self-powered, provide control power source as indicated or as required to complete installation.

N. Multi-Wire Branch Circuits: Group grounded and ungrounded conductors together in the panelboard as required by NFPA 70.

O. Set field-adjustable circuit breaker tripping function settings as determined by overcurrent protective device coordination study performed according to Section 26 0573.

P. Set field-adjustable ground fault protection pickup and time delay settings as indicated.

Q. Provide filler plates to cover unused spaces in panelboards.

R. Provide circuit breaker lock-on devices to prevent unauthorized personnel from de-energizing essential loads where indicated. Also provide for the following:
   1. Emergency and night lighting circuits.
   2. Fire detection and alarm circuits.

S. Identify panelboards in accordance with Section 26 0553.

3.03 FIELD QUALITY CONTROL

A. Inspect and test in accordance with NETA ATS, except Section 4.

B. Molded Case Circuit Breakers: Perform inspections and tests listed in NETA ATS, Section 7.6.1.1 for all main circuit breakers and circuit breakers larger than 225 amperes. Tests listed as optional are not required.

C. Ground Fault Protection Systems: Test in accordance with manufacturer's instructions as required by NFPA 70.

D. Test GFCI circuit breakers to verify proper operation.

E. Test AFCI circuit breakers to verify proper operation.

F. Test shunt trips to verify proper operation.

G. Correct deficiencies and replace damaged or defective panelboards or associated components.

3.04 ADJUSTING

A. Adjust tightness of mechanical and electrical connections to manufacturer's recommended torque settings.

B. Adjust alignment of panelboard fronts.

C. Load Balancing: For each panelboard, rearrange circuits such that the difference between each measured steady state phase load does not exceed 15 percent and adjust circuit directories accordingly. Maintain proper phasing for multi-wire branch circuits.

3.05 CLEANING

A. Clean dirt and debris from panelboard enclosures and components according to manufacturer's instructions.

B. Repair scratched or marred exterior surfaces to match original factory finish.

END OF SECTION

SECTION 26 2713
ELECTRICITY METERING

PART 1 GENERAL

1.01 SECTION INCLUDES

A. Equipment for Owner electricity metering:
   1. Single circuit electricity meters.
   2. Multi-circuit electricity meters.

1.02 RELATED REQUIREMENTS

A. Section 26 0526 - Grounding and Bonding for Electrical Systems.

B. Section 26 0529 - Hangers and Supports for Electrical Systems.

C. Section 26 0533.16 - Boxes for Electrical Systems: Cabinets and enclosures for metering system components.

D. Section 26 0553 - Identification for Electrical Systems: Identification products and requirements.

E. Section 26 2100 - Low-Voltage Electrical Service Entrance: Requirements for Utility Company electricity metering.

F. Section 26 2416 - Panelboards: For interface with meters specified in this section.

G. Section 26 2813 - Fuses.

1.03 REFERENCE STANDARDS

A. ANSI C12.1 - Electric Meters - Code for Electricity Metering 2016, with Errata.

B. ANSI C12.20 - American National Standard for Electricity Meters - 0.1, 0.2, and 0.5 Accuracy Classes 2018, with Errata.

C. IEEE 1459 - IEEE Standard Definitions for the Measurement of Electric Power Quantities Under Sinusoidal, Nonsinusoidal, Balanced, or Unbalanced Conditions 2010.

D. IEEE C57.13 - IEEE Standard Requirements for Instrument Transformers 2016.

E. NECA 1 - Standard for Good Workmanship in Electrical Construction 2015.

F. NEMA 250 - Enclosures for Electrical Equipment (1000 Volts Maximum) 2020.

G. NETA ATS - Standard For Acceptance Testing Specifications For Electrical Power Equipment And Systems 2021.

H. NFPA 70 - National Electrical Code Most Recent Edition Adopted by Authority Having Jurisdiction, Including All Applicable Amendments and Supplements.

1.04 ADMINISTRATIVE REQUIREMENTS

A. Coordination:
   1. Coordinate work to provide equipment suitable for interface with electricity metering systems to be provided.
   2. Notify Architect of any conflicts with or deviations from Contract Documents. Obtain direction before proceeding with work.

1.05 SUBMITTALS

A. Product Data: Provide manufacturer's standard catalog pages and data sheets for electricity metering systems and associated components and accessories. Include ratings, configurations, standard wiring diagrams, dimensions, service condition requirements, and installed features.

B. Shop Drawings: Include system interconnection schematic diagrams showing all factory and field connections. Include requirements for interface with other systems.

1.06 QUALITY ASSURANCE

A. Comply with requirements of NFPA 70.

B. Manufacturer Qualifications: Company specializing in manufacturing the products specified in this section with minimum three years documented experience.

C. Product Listing Organization Qualifications: An organization recognized by OSHA as a Nationally Recognized Testing Laboratory (NRTL) and acceptable to authorities having jurisdiction.

1.07 DELIVERY, STORAGE, AND HANDLING

A. Receive, inspect, handle, and store products in accordance with manufacturer's instructions.

B. Store products in manufacturer's unopened packaging, keep dry and protect from damage until ready for installation.

1.08 FIELD CONDITIONS

A. Maintain field conditions within required service conditions during and after installation.

PART 2 PRODUCTS

2.01 EQUIPMENT FOR OWNER ELECTRICITY METERING

A. Provide microprocessor-based digital electricity metering systems including all instrument transformers, wiring, and connections necessary for measurements specified.

B. Provide products listed, classified, and labeled as suitable for the purpose intended.

C. Provide electricity metering systems and associated components compatible with the equipment and associated circuits to be metered.

D. Service Conditions: Provide electricity meters suitable for operation under the service conditions at the installed location.

E. Enclosures:
   1. Where not furnished by manufacturer, provide required cabinets and enclosures in accordance with Section 26 0533.16.
   2. Environment Type per NEMA 250: Unless otherwise indicated, as specified for the following installation locations:
      a. Indoor Clean, Dry Locations: Type 1.
      b. Outdoor Locations: Type 3R or Type 4.
   3. Provide lockable door(s) for outdoor locations.
   4. Finish: Manufacturer's standard unless otherwise indicated.

F. Instrument Transformers:
   1. Comply with IEEE C57.13, where applicable.
   2. Select suitable ratio, burden, and accuracy as required for connected devices.
   3. Current Transformers: Compatible with connected meters; replace meters damaged by connection of incompatible current transformers. Provide shorting terminal blocks for connection of secondaries where applicable.
   4. Potential Transformers: Include primary and secondary fuses with disconnecting means.

2.02 SINGLE CIRCUIT ELECTRICITY METERS

A. Single Circuit Electricity Meter:
   1. Measured Parameters:
      a. Voltage (Volts AC); line-to-line and line-to-neutral; per phase.
      b. Current (Amps); per phase.
      c. Frequency (Hz).
      d. Real/active power (kW); per phase and total of all phases.
      e. Reactive power (kVAR); per phase and total of all phases.

f. Apparent power (kVA); per phase and total of all phases.
g. Power factor; per phase and total of all phases.
h. Real/active energy (kWh).
i. Reactive energy (kVARh).
j. Power demand; real/active, reactive, and apparent; present and maximum.

2. Data logging.
a. Storage Capacity: 30 days of readings at 15 minute intervals.

3. Outputs:
a. Pulse Output(s): One.

2.03 MULTI-CIRCUIT ELECTRICITY METERS

A. Multi-Circuit Electricity Meter:
1. Measured Parameters:
a. Voltage (Volts AC); line-to-line and line-to-neutral; per phase.
b. Current (Amps); per phase.
c. Frequency (Hz).
d. Real/active power (kW); per phase and total of all phases.
e. Reactive power (kVAR); per phase and total of all phases.
f. Apparent power (kVA); per phase and total of all phases.
g. Power factor; per phase and total of all phases.
h. Real/active energy (kWh).
i. Reactive energy (kVARh).
j. Apparent energy (kVAh).
k. Power demand; real/active; present and maximum.
2. Data logging.
a. Storage Capacity: 30 days of readings at 15 minute intervals.

PART 3 EXECUTION

3.01 EXAMINATION

A. Verify that field measurements are as indicated.

B. Verify that the ratings and configurations of metering systems and associated components are consistent with the indicated requirements.

C. Verify that mounting surfaces are ready to receive meters.

D. Verify that conditions are satisfactory for installation prior to starting work.

3.02 INSTALLATION

A. Perform work in accordance with NECA 1 (general workmanship).

B. Install products in accordance with manufacturer's instructions.

C. Provide required support and attachment components in accordance with Section 26 0529.

D. Provide grounding and bonding in accordance with Section 26 0526.

E. Provide fuses complying with Section 26 2813 as required.

F. Identify meters and associated wiring in accordance with Section 26 0553.

3.03 FIELD QUALITY CONTROL

A. Inspect and test in accordance with NETA ATS, except Section 4.

B. Meters: Perform inspections and tests listed in NETA ATS, Section 7.11.2.

C. Instrument Transformers: Perform inspections and tests listed in NETA ATS, Section 7.10. The dielectric withstand tests on primary windings with secondary windings connected to ground listed as optional

are not required.

D. Correct deficiencies and replace damaged or defective metering system components.

3.04 ADJUSTING

A. Program system parameters according to requirements of Owner.

3.05 CLEANING

A. Clean exposed surfaces to remove dirt, paint, or other foreign material and restore to match original factory finish.

3.06 CLOSEOUT ACTIVITIES

A. Training: Train Owner's personnel on operation, adjustment, and maintenance of system.
   1. Use operation and maintenance manual as training reference, supplemented with additional training materials as required.
   2. Provide minimum of two hours of training.
   3. Instructor: Manufacturer's authorized representative.
   4. Location: At project site.

3.07 PROTECTION

A. Protect installed system components from subsequent construction operations.

END OF SECTION

SECTION 26 2726
WIRING DEVICES

PART 1 GENERAL

1.01 SECTION INCLUDES

A. Wall switches.

B. Wall dimmers.

C. Receptacles.

D. Wall plates.

E. Floor box service fittings.

F. Poke-through assemblies.

G. Access floor boxes.

1.02 RELATED REQUIREMENTS

A. Section 26 0519 - Low-Voltage Electrical Power Conductors and Cables: Manufactured wiring systems for use with access floor boxes with compatible pre-wired connectors.

B. Section 26 0526 - Grounding and Bonding for Electrical Systems.

C. Section 26 0533.16 - Boxes for Electrical Systems.

D. Section 26 0553 - Identification for Electrical Systems: Identification products and requirements.

E. Section 26 0583 - Wiring Connections: Cords and plugs for equipment.

F. Section 26 0923 - Lighting Control Devices: Devices for automatic control of lighting, including occupancy sensors, in-wall time switches, and in-wall interval timers.

G. Section 26 2913 - Enclosed Controllers: Manual motor starters and horsepower rated motor-starting switches without overload protection.

1.03 REFERENCE STANDARDS

A. FS W-C-596 - Connector, Electrical, Power, General Specification for 2014h, with Amendments (2017).

B. FS W-S-896 - Switches, Toggle (Toggle and Lock), Flush-mounted (General Specification) 2014g, with Amendment (2017).

C. NECA 1 - Standard for Good Workmanship in Electrical Construction 2015.

D. NECA 130 - Standard for Installing and Maintaining Wiring Devices 2016.

E. NEMA WD 1 - General Color Requirements for Wiring Devices 1999 (Reaffirmed 2020).

F. NEMA WD 6 - Wiring Devices - Dimensional Specifications 2016.

G. NFPA 70 - National Electrical Code Most Recent Edition Adopted by Authority Having Jurisdiction, Including All Applicable Amendments and Supplements.

H. UL 20 - General-Use Snap Switches Current Edition, Including All Revisions.

I. UL 498 - Attachment Plugs and Receptacles Current Edition, Including All Revisions.

J. UL 514D - Cover Plates for Flush-Mounted Wiring Devices Current Edition, Including All Revisions.

K. UL 943 - Ground-Fault Circuit-Interrupters Current Edition, Including All Revisions.

L. UL 1449 - Standard for Surge Protective Devices Current Edition, Including All Revisions.

M. UL 1472 - Solid-State Dimming Controls Current Edition, Including All Revisions.

1.04 ADMINISTRATIVE REQUIREMENTS

A. Coordination:

1. Coordinate the placement of outlet boxes with millwork, furniture, equipment, etc. installed under other sections or by others.
2. Coordinate wiring device ratings and configurations with the electrical requirements of actual equipment to be installed.
3. Coordinate the placement of outlet boxes for wall switches with actual installed door swings.
4. Coordinate the installation and preparation of uneven surfaces, such as split face block, to provide suitable surface for installation of wiring devices.
5. Coordinate the core drilling of holes for poke-through assemblies with the work covered under other sections.
6. Notify Architect of any conflicts or deviations from Contract Documents to obtain direction prior to proceeding with work.

1.05 SUBMITTALS

A. Product Data: Provide manufacturer's catalog information showing dimensions, colors, and configurations.

B. Operation and Maintenance Data:
   1. GFCI Receptacles: Include information on status indicators.

C. Maintenance Materials: Furnish the following for Owner's use in maintenance of project.
   1. Screwdrivers for Tamper-Resistant Screws: Two for each type of screw.

1.06 QUALITY ASSURANCE

A. Comply with requirements of NFPA 70.

B. Manufacturer Qualifications: Company specializing in manufacturing the products specified in this section with minimum three years documented experience.

C. Products: Listed, classified, and labeled as suitable for the purpose intended.

D. Product Listing Organization Qualifications: An organization recognized by OSHA as a Nationally Recognized Testing Laboratory (NRTL) and acceptable to authorities having jurisdiction.

1.07 DELIVERY, STORAGE, AND PROTECTION

A. Store in a clean, dry space in original manufacturer's packaging until ready for installation.

PART 2 PRODUCTS

2.01 WIRING DEVICE APPLICATIONS

A. Provide wiring devices suitable for intended use and with ratings adequate for load served.

B. For single receptacles installed on an individual branch circuit, provide receptacle with ampere rating not less than that of the branch circuit.

C. Provide weather resistant GFCI receptacles with specified weatherproof covers for receptacles installed outdoors or in damp or wet locations.

D. Provide tamper resistant receptacles for receptacles installed in dwelling units.

E. Provide GFCI protection for receptacles installed within 6 feet of sinks.

F. Provide GFCI protection for receptacles installed in kitchens.

G. Provide GFCI protection for receptacles serving electric drinking fountains.

H. Unless noted otherwise, do not use combination switch/receptacle devices.

I. For flush floor service fittings, use tile rings for installations in tile floors.

J. For flush floor service fittings, use carpet flanges for installations in carpeted floors.

2.02 WIRING DEVICE FINISHES

A. Provide wiring device finishes as described below unless otherwise indicated.

2.03 WALL SWITCHES

A. Wall Switches - General Requirements: AC only, quiet operating, general-use snap switches with silver alloy contacts, complying with NEMA WD 1 and NEMA WD 6, and listed as complying with UL 20 and where applicable, FS W-S-896; types as indicated on the drawings.
   1. Wiring Provisions: Terminal screws for side wiring and screw actuated binding clamp for back wiring with separate ground terminal screw.

B. Standard Wall Switches: Industrial specification grade, 20 A, 120/277 V with standard toggle type switch actuator and maintained contacts; single pole single throw, double pole single throw, three way, or four way as indicated on the drawings.

C. Lighted Wall Switches: Industrial specification grade, 20 A, 120/277 V with illuminated standard toggle type switch actuator and maintained contacts; illuminated with load off; single pole single throw, double pole single throw, three way, or four way as indicated on the drawings.

2.04 WALL DIMMERS

A. Wall Dimmers - General Requirements: Solid-state with continuous full-range even control following square law dimming curve, integral radio frequency interference filtering, power failure preset memory, air gap switch accessible without removing wall plate, complying with NEMA WD 1 and NEMA WD 6, and listed as complying with UL 1472; types and ratings suitable for load controlled as indicated on the drawings.

B. Control: Slide control type with separate on/off switch.

C. Power Rating, Unless Otherwise Indicated or Required to Control the Load Indicated on the Drawings:
   1. Magnetic Low-Voltage: 600 VA.
   2. Electronic Low-Voltage: 400 VA.

D. Provide accessory wall switches to match dimmer appearance when installed adjacent to each other.

2.05 RECEPTACLES

A. Receptacles - General Requirements: Self-grounding, complying with NEMA WD 1 and NEMA WD 6, and listed as complying with UL 498, and where applicable, FS W-C-596; types as indicated on the drawings.
   1. Wiring Provisions: Terminal screws for side wiring or screw actuated binding clamp for back wiring with separate ground terminal screw.
   2. NEMA configurations specified are according to NEMA WD 6.
   3. Hospital Grade Receptacles: Listed as complying with UL 498 Supplement SD, with green dot hospital grade mark on device face.

B. Convenience Receptacles:
   1. Standard Convenience Receptacles: Industrial specification grade, 20A, 125V, NEMA 5-20R; single or duplex as indicated on the drawings.
   2. Weather Resistant Convenience Receptacles: Industrial specification grade, 20A, 125V, NEMA 5-20R, listed and labeled as weather resistant type complying with UL 498 Supplement SE suitable for installation in damp or wet locations; single or duplex as indicated on the drawings.
   3. Tamper Resistant Convenience Receptacles: Industrial specification grade, 20A, 125V, NEMA 5-20R, listed and labeled as tamper resistant type; single or duplex as indicated on the drawings.
   4. Tamper Resistant and Weather Resistant Convenience Receptacles: Industrial specification grade, 20A, 125V, NEMA 5-20R, listed and labeled as tamper resistant type and as weather resistant type complying with UL 498 Supplement SE suitable for installation in damp or wet locations; single or duplex as indicated on the drawings.

C. GFCI Receptacles:
   1. GFCI Receptacles - General Requirements: Self-testing, with feed-through protection and light to indicate ground fault tripped condition and loss of protection; listed as complying with UL 943,

class A.

2. Standard GFCI Receptacles: Industrial specification grade, duplex, 20A, 125V, NEMA 5-20R, rectangular decorator style.
3. Weather Resistant GFCI Receptacles: Industrial specification grade, duplex, 20A, 125V, NEMA 5-20R, rectangular decorator style, listed and labeled as weather resistant type complying with UL 498 Supplement SD suitable for installation in damp or wet locations.
4. Tamper Resistant GFCI Receptacles: Industrial specification grade, duplex, 20A, 125V, NEMA 5-20R, rectangular decorator style, listed and labeled as tamper resistant type.
5. Tamper Resistant and Weather Resistant GFCI Receptacles: Industrial specification grade, duplex, 20A, 125V, NEMA 5-20R, rectangular decorator style, listed and labeled as tamper resistant type and as weather resistant type complying with UL 498 Supplement SD suitable for installation in damp or wet locations.

D. Locking Receptacles: Industrial specification grade, configuration as indicated on the drawings.
   1. Standard Locking Convenience Receptacles: Single, 20A, 125V, NEMA L5-20R.

2.06 WALL PLATES

A. Wall Plates: Comply with UL 514D.
   1. Configuration: One piece cover as required for quantity and types of corresponding wiring devices.
   2. Size: Standard.
   3. Screws: Metal with slotted heads finished to match wall plate finish.

B. Nylon Wall Plates: Smooth finish, high-impact thermoplastic.

C. Stainless Steel Wall Plates: Brushed satin finish, Type 302 stainless steel.

D. Weatherproof Covers for Wet or Damp Locations: Gasketed, cast aluminum, with hinged lockable cover and corrosion-resistant screws; listed as suitable for use in wet locations while in use with attachment plugs connected and identified as extra-duty type.

2.07 FLOOR BOX SERVICE FITTINGS

A. Description: Service fittings compatible with floor boxes provided under Section 26 0533.16 with components, adapters, and trims required for complete installation.

PART 3 EXECUTION

3.01 EXAMINATION

A. Verify that field measurements are as indicated.

B. Verify that outlet boxes are installed in proper locations and at proper mounting heights and are properly sized to accommodate devices and conductors in accordance with NFPA 70.

C. Verify that wall openings are neatly cut and will be completely covered by wall plates.

D. Verify that final surface finishes are complete, including painting.

E. Verify that floor boxes are adjusted properly.

F. Verify that branch circuit wiring installation is completed, tested, and ready for connection to wiring devices.

G. Verify that core drilled holes for poke-through assemblies are in proper locations.

H. Verify that conditions are satisfactory for installation prior to starting work.

3.02 PREPARATION

A. Provide extension rings to bring outlet boxes flush with finished surface.

B. Clean dirt, debris, plaster, and other foreign materials from outlet boxes.

3.03 INSTALLATION

A. Perform work in accordance with NECA 1 (general workmanship) and, where applicable, NECA 130, including mounting heights specified in those standards unless otherwise indicated.

B. Coordinate locations of outlet boxes provided under Section 26 0533.16 as required for installation of wiring devices provided under this section.
   1. Mounting Heights: Unless otherwise indicated, as follows:
      a. Wall Switches: 48 inches above finished floor.
      b. Wall Dimmers: 48 inches above finished floor.
      c. Receptacles: 18 inches above finished floor or 6 inches above counter.
   2. Orient outlet boxes for vertical installation of wiring devices unless otherwise indicated.
   3. Locate receptacles for electric drinking fountains concealed behind drinking fountain according to manufacturer's instructions.

C. Install wiring devices in accordance with manufacturer's instructions.

D. Install permanent barrier between ganged wiring devices when voltage between adjacent devices exceeds 300 V.

E. Where required, connect wiring devices using pigtails not less than 6 inches long. Do not connect more than one conductor to wiring device terminals.

F. Connect wiring devices by wrapping conductor clockwise 3/4 turn around screw terminal and tightening to proper torque specified by the manufacturer. Where present, do not use push-in pressure terminals that do not rely on screw-actuated binding.

G. Unless otherwise indicated, connect wiring device grounding terminal to branch circuit equipment grounding conductor and to outlet box with bonding jumper.

H. Provide GFCI receptacles with integral GFCI protection at each location indicated. Do not use feed-through wiring to protect downstream devices.

I. Where split-wired duplex receptacles are indicated, remove tabs connecting top and bottom receptacles.

J. Install wiring devices plumb and level with mounting yoke held rigidly in place.

K. Install wall switches with OFF position down.

L. Install wall dimmers to achieve full rating specified and indicated after derating for ganging as instructed by manufacturer.

M. Do not share neutral conductor on branch circuits utilizing wall dimmers.

N. Install vertically mounted receptacles with grounding pole on bottom and horizontally mounted receptacles with grounding pole on left.

O. Install wall plates to fit completely flush to wall with no gaps and rough opening completely covered without strain on wall plate. Repair or reinstall improperly installed outlet boxes or improperly sized rough openings. Do not use oversized wall plates in lieu of meeting this requirement.

P. Install blank wall plates on junction boxes and on outlet boxes with no wiring devices installed or designated for future use.

Q. Identify wiring devices in accordance with Section 26 0553.

3.04 FIELD QUALITY CONTROL

A. Inspect each wiring device for damage and defects.

B. Operate each wall switch and wall dimmer with circuit energized to verify proper operation.

C. Test each receptacle to verify operation and proper polarity.

D. Test each GFCI receptacle for proper tripping operation according to manufacturer's instructions.

E. Correct wiring deficiencies and replace damaged or defective wiring devices.

3.05 ADJUSTING

A. Adjust devices and wall plates to be flush and level.

B. Adjust presets for wall dimmers according to manufacturer's instructions as directed by Architect.

3.06 CLEANING

A. Clean exposed surfaces to remove dirt, paint, or other foreign material and restore to match original factory finish.

END OF SECTION

SECTION 26 2813
FUSES

PART 1 GENERAL

1.01 SECTION INCLUDES

A. Fuses.

B. Spare fuse cabinet.

1.02 RELATED REQUIREMENTS

A. Section 26 0553 - Identification for Electrical Systems: Identification products and requirements.

B. Section 26 2816.16 - Enclosed Switches: Fusible switches.

1.03 REFERENCE STANDARDS

A. NEMA FU 1 - Low Voltage Cartridge Fuses 2012.

B. NFPA 70 - National Electrical Code Most Recent Edition Adopted by Authority Having Jurisdiction, Including All Applicable Amendments and Supplements.

C. UL 248-1 - Low-Voltage Fuses - Part 1: General Requirements Current Edition, Including All Revisions.

D. UL 248-4 - Low-Voltage Fuses - Part 4: Class CC Fuses Current Edition, Including All Revisions.

E. UL 248-8 - Low-Voltage Fuses - Part 8: Class J Fuses Current Edition, Including All Revisions.

F. UL 248-10 - Low-Voltage Fuses - Part 10: Class L Fuses Current Edition, Including All Revisions.

G. UL 248-12 - Low-Voltage Fuses - Part 12: Class R Fuses Current Edition, Including All Revisions.

H. UL 248-15 - Low-Voltage Fuses - Part 15: Class T Fuses Current Edition, Including All Revisions.

1.04 ADMINISTRATIVE REQUIREMENTS

A. Coordination:
   1. Coordinate fuse clips furnished in equipment provided under other sections for compatibility with indicated fuses.
   2. Coordinate fuse requirements according to manufacturer's recommendations and nameplate data for actual equipment to be installed.
   3. Notify Architect of any conflicts with or deviations from Contract Documents. Obtain direction before proceeding with work.

1.05 SUBMITTALS

A. Product Data: Provide manufacturer's standard data sheets including voltage and current ratings, interrupting ratings, time-current curves, and current limitation curves.
   1. Spare Fuse Cabinet: Include dimensions.

B. Maintenance Materials: Furnish the following for Owner's use in maintenance of project.
   1. Extra Fuses: One set(s) of three for each type and size installed.
   2. Spare Fuse Cabinet Keys: Two.

1.06 QUALITY ASSURANCE

A. Comply with requirements of NFPA 70.

B. Manufacturer Qualifications: Company specializing in manufacturing the products specified in this section with minimum three years documented experience.

C. Product Listing Organization Qualifications: An organization recognized by OSHA as a Nationally Recognized Testing Laboratory (NRTL) and acceptable to authorities having jurisdiction.

PART 2 PRODUCTS

2.01 APPLICATIONS

A. General Purpose Branch Circuits: Class RK1, time-delay.

B. Individual Motor Branch Circuits: Class RK1, time-delay.

C. In-Line Protection for Pole-Mounted Luminaires: Class CC, time-delay.

D. Primary Protection for Control Transformers: Class CC, time-delay.

2.02 FUSES

A. Provide products listed, classified, and labeled as suitable for the purpose intended.

B. Unless specifically indicated to be excluded, provide fuses for all fusible equipment as required for a complete operating system.

C. Provide fuses of the same type, rating, and manufacturer within the same switch.

D. Comply with UL 248-1.

E. Unless otherwise indicated, provide cartridge type fuses complying with NEMA FU 1, Class and ratings as indicated.

F. Voltage Rating: Suitable for circuit voltage.

G. Class R Fuses: Comply with UL 248-12.
   1. Class RK1, Time-Delay Fuses:

H. Class J Fuses: Comply with UL 248-8.

I. Class L Fuses: Comply with UL 248-10.
   1. Class L, Fast-Acting, Non-Time-Delay Fuses:

J. Class T Fuses: Comply with UL 248-15.

K. Class CC Fuses: Comply with UL 248-4.
   1. Class CC, Time-Delay Fuses:

L. Selectivity: Where the requirement for selectivity is indicated, furnish products as required to achieve selective coordination.

M. Provide the following accessories where indicated or where required to complete installation:
   1. Fuseholders: Compatible with indicated fuses.

2.03 SPARE FUSE CABINET

A. Description: Wall-mounted sheet metal cabinet with shelves and hinged door with cylinder lock, suitably sized to store spare fuses and fuse pullers specified.

B. Finish: Manufacturer's standard, factory applied grey finish unless otherwise indicated.

PART 3 EXECUTION

3.01 EXAMINATION

A. Verify that fuse ratings are consistent with circuit voltage and manufacturer's recommendations and nameplate data for equipment.

B. Verify that mounting surfaces are ready to receive spare fuse cabinet.

C. Verify that conditions are satisfactory for installation prior to starting work.

3.02 INSTALLATION

A. Do not install fuses until circuits are ready to be energized.

B. Install fuses with label oriented such that manufacturer, type, and size are easily read.

C. Install spare fuse cabinet where indicated.

D. Identify spare fuse cabinet in accordance with Section 26 0553.

END OF SECTION

SECTION 26 2816.16
ENCLOSED SWITCHES

PART 1 GENERAL

1.01 SECTION INCLUDES

A. Enclosed safety switches.

1.02 RELATED REQUIREMENTS

A. Section 26 0526 - Grounding and Bonding for Electrical Systems.

B. Section 26 0529 - Hangers and Supports for Electrical Systems.

C. Section 26 0553 - Identification for Electrical Systems: Identification products and requirements.

D. Section 26 0573 - Power System Studies: Additional criteria for the selection of equipment and associated protective devices specified in this section.

E. Section 26 2813 - Fuses.

F. Section 26 2913 - Enclosed Controllers: Manual motor controllers.

G. Section 26 3600 - Transfer Switches: Automatic and non-automatic switches listed for use as transfer switch equipment.

1.03 REFERENCE STANDARDS

A. NECA 1 - Standard for Good Workmanship in Electrical Construction 2015.

B. NEMA 250 - Enclosures for Electrical Equipment (1000 Volts Maximum) 2020.

C. NEMA KS 1 - Heavy Duty Enclosed and Dead-Front Switches (600 Volts Maximum) 2013.

D. NETA ATS - Standard For Acceptance Testing Specifications For Electrical Power Equipment And Systems 2021.

E. NFPA 70 - National Electrical Code Most Recent Edition Adopted by Authority Having Jurisdiction, Including All Applicable Amendments and Supplements.

F. UL 50 - Enclosures for Electrical Equipment, Non-Environmental Considerations Current Edition, Including All Revisions.

G. UL 50E - Enclosures for Electrical Equipment, Environmental Considerations Current Edition, Including All Revisions.

H. UL 98 - Enclosed and Dead-Front Switches Current Edition, Including All Revisions.

I. UL 869A - Reference Standard for Service Equipment Current Edition, Including All Revisions.

1.04 ADMINISTRATIVE REQUIREMENTS

A. Coordination:

1. Coordinate the work with other trades. Avoid placement of ductwork, piping, equipment, or other potential obstructions within the dedicated equipment spaces and within working clearances for electrical equipment required by NFPA 70.
2. Coordinate arrangement of electrical equipment with the dimensions and clearance requirements of the actual equipment to be installed.
3. Verify with manufacturer that conductor terminations are suitable for use with the conductors to be installed.
4. Notify Architect of any conflicts with or deviations from Contract Documents. Obtain direction before proceeding with work.

1.05 SUBMITTALS

A. Product Data: Provide manufacturer's standard catalog pages and data sheets for enclosed switches and other installed components and accessories.

1.06 QUALITY ASSURANCE

A. Comply with requirements of NFPA 70.

B. Manufacturer Qualifications: Company specializing in manufacturing the products specified in this section with minimum three years documented experience.

C. Product Listing Organization Qualifications: An organization recognized by OSHA as a Nationally Recognized Testing Laboratory (NRTL) and acceptable to authorities having jurisdiction.

1.07 DELIVERY, STORAGE, AND HANDLING

A. Store in a clean, dry space. Maintain factory wrapping or provide an additional heavy canvas or heavy plastic cover to protect units from dirt, water, construction debris, and traffic.

B. Handle carefully in accordance with manufacturer's written instructions to avoid damage to enclosed switch internal components, enclosure, and finish.

1.08 FIELD CONDITIONS

A. Maintain ambient temperature between -22 degrees F and 104 degrees F during and after installation of enclosed switches.

PART 2 PRODUCTS

2.01 ENCLOSED SAFETY SWITCHES

A. Description: Quick-make, quick-break enclosed safety switches listed and labeled as complying with UL 98; heavy duty; ratings, configurations, and features as indicated on the drawings.

B. Provide products listed, classified, and labeled as suitable for the purpose intended.

C. Unless otherwise indicated, provide products suitable for continuous operation under the following service conditions:
   1. Altitude: Less than 6,600 feet.
   2. Ambient Temperature: Between -22 degrees F and 104 degrees F.

D. Horsepower Rating: Suitable for connected load.

E. Voltage Rating: Suitable for circuit voltage.

F. Short Circuit Current Rating:
   1. Provide enclosed safety switches, when protected by the fuses or supply side overcurrent protective devices to be installed, with listed short circuit current rating not less than the available fault current at the installed location as determined by short circuit study performed in accordance with Section 26 0573.

G. Enclosed Safety Switches Used for Service Entrance: Listed and labeled as suitable for use as service equipment according to UL 869A.

H. Provide with switch blade contact position that is visible when the cover is open.

I. Fuse Clips for Fusible Switches: As required to accept fuses indicated.
   1. Where NEMA Class R fuses are installed, provide rejection feature to prevent installation of fuses other than Class R.

J. Conductor Terminations: Suitable for use with the conductors to be installed.

K. Provide insulated, groundable fully rated solid neutral assembly where a neutral connection is required, with a suitable lug for terminating each neutral conductor.

L. Provide solidly bonded equipment ground bus in each enclosed safety switch, with a suitable lug for terminating each equipment grounding conductor.

M. Enclosures: Comply with NEMA 250, and list and label as complying with UL 50 and UL 50E.
   1. Environment Type per NEMA 250: Unless otherwise indicated, as specified for the following installation locations:

a. Indoor Clean, Dry Locations: Type 1.
b. Outdoor Locations: Type 3R.

2. Finish for Painted Steel Enclosures: Manufacturer's standard, factory applied grey unless otherwise indicated.

N. Provide safety interlock to prevent opening the cover with the switch in the ON position with capability of overriding interlock for testing purposes.

O. Heavy Duty Switches:
1. Comply with NEMA KS 1.
2. Conductor Terminations:
a. Provide mechanical lugs unless otherwise indicated.
b. Lug Material: Aluminum, suitable for terminating aluminum or copper conductors.
3. Provide externally operable handle with means for locking in the OFF position, capable of accepting three padlocks.

P. Provide the following features and accessories where indicated or where required to complete installation:
1. Viewing Window: Positioned over switch blades for visual confirmation of contact position with door closed.

PART 3 EXECUTION

3.01 EXAMINATION

A. Verify that field measurements are as indicated.

B. Verify that the ratings of the enclosed switches are consistent with the indicated requirements.

C. Verify that mounting surfaces are ready to receive enclosed safety switches.

D. Verify that conditions are satisfactory for installation prior to starting work.

3.02 INSTALLATION

A. Install products in accordance with manufacturer's instructions.

B. Perform work in accordance with NECA 1 (general workmanship).

C. Arrange equipment to provide minimum clearances in accordance with manufacturer's instructions and NFPA 70.

D. Provide required support and attachment in accordance with Section 26 0529.

E. Install enclosed switches plumb.

F. Except where indicated to be mounted adjacent to the equipment they supply, mount enclosed switches such that the highest position of the operating handle does not exceed 79 inches above the floor or working platform.

G. Provide grounding and bonding in accordance with Section 26 0526.

H. Provide fuses complying with Section 26 2813 for fusible switches as indicated or as required by equipment manufacturer's recommendations.

I. Where accessories are not self-powered, provide control power source as indicated or as required to complete installation.

J. Identify enclosed switches in accordance with Section 26 0553.

3.03 FIELD QUALITY CONTROL

A. See Section 01 4000 - Quality Requirements, for additional requirements.

B. Inspect and test in accordance with NETA ATS, except Section 4.

C. Perform inspections and tests listed in NETA ATS, Section 7.5.1.1.

D. Correct deficiencies and replace damaged or defective enclosed safety switches or associated components.

3.04 ADJUSTING

A. Adjust tightness of mechanical and electrical connections to manufacturer's recommended torque settings.

3.05 CLEANING

A. Clean dirt and debris from switch enclosures and components according to manufacturer's instructions.

B. Repair scratched or marred exterior surfaces to match original factory finish.

END OF SECTION

SECTION 26 2913
ENCLOSED CONTROLLERS

PART 1 GENERAL

1.01 SECTION INCLUDES

A. Enclosed NEMA controllers for low-voltage (600 V and less) applications:
   1. Magnetic motor starters.
   2. General purpose contactors.
   3. Manual motor starters.
   4. Motor-starting switches without overload protection.

B. Overcurrent protective devices for motor controllers, including overload relays.

C. Control accessories:
   1. Auxiliary contacts.
   2. Pilot devices.
   3. Control and timing relays.
   4. Control power transformers.
   5. Control terminal blocks.

1.02 RELATED REQUIREMENTS

A. Section 26 0526 - Grounding and Bonding for Electrical Systems.

B. Section 26 0529 - Hangers and Supports for Electrical Systems.

C. Section 26 0548 - Vibration and Seismic Controls for Electrical Systems.
   1. Includes requirements for the seismic qualification of equipment specified in this section.

D. Section 26 0553 - Identification for Electrical Systems: Identification products and requirements.

E. Section 26 0573 - Power System Studies: Additional criteria for the selection and adjustment of equipment and associated protective devices specified in this section.

F. Section 26 2813 - Fuses: Fuses for fusible switches.

G. Section 26 2923 - Variable-Frequency Motor Controllers.

1.03 REFERENCE STANDARDS

A. IEEE C57.13 - IEEE Standard Requirements for Instrument Transformers 2016.

B. NECA 1 - Standard for Good Workmanship in Electrical Construction 2015.

C. NEMA 250 - Enclosures for Electrical Equipment (1000 Volts Maximum) 2020.

D. NEMA ICS 2 - Industrial Control and Systems Controllers, Contactors and Overload Relays Rated 600 Volts 2008 (Reaffirmed 2020).

E. NEMA ICS 5 - Industrial Control and Systems: Control Circuit and Pilot Devices 2017.

F. NEMA ICS 6 - Industrial Control and Systems: Enclosures 1993 (Reaffirmed 2016).

G. NEMA KS 1 - Heavy Duty Enclosed and Dead-Front Switches (600 Volts Maximum) 2013.

H. NETA ATS - Standard For Acceptance Testing Specifications For Electrical Power Equipment And Systems 2021.

I. NFPA 70 - National Electrical Code Most Recent Edition Adopted by Authority Having Jurisdiction, Including All Applicable Amendments and Supplements.

J. UL 98 - Enclosed and Dead-Front Switches Current Edition, Including All Revisions.

K. UL 489 - Molded-Case Circuit Breakers, Molded-Case Switches and Circuit Breaker Enclosures Current Edition, Including All Revisions.

L. UL 60947-1 - Low-Voltage Switchgear and Controlgear - Part 1: General Rules Current Edition, Including All Revisions.

M. UL 60947-4-1 - Low-Voltage Switchgear and Controlgear - Part 4-1: Contactors and Motor-starters - Electromechanical Contactors and Motor-starters Current Edition, Including All Revisions.

1.04 ADMINISTRATIVE REQUIREMENTS

A. Coordination:
1. Coordinate the work with other trades to avoid placement of ductwork, piping, equipment, or other potential obstructions within the dedicated equipment spaces and working clearances required by NFPA 70.
2. Coordinate the work to provide motor controllers and associated overload relays suitable for use with the actual motors to be installed.
3. Coordinate the work to provide controllers and associated wiring suitable for interface with control devices to be installed.
4. Coordinate arrangement of electrical equipment with the dimensions and clearance requirements of the actual equipment to be installed.
5. Verify with manufacturer that conductor terminations are suitable for use with the conductors to be installed.
6. Notify Architect of any conflicts with or deviations from Contract Documents. Obtain direction before proceeding with work.

1.05 SUBMITTALS

A. See Section 01 3000 - Administrative Requirements, for submittal procedures.

B. Product Data: Provide manufacturer's standard catalog pages and data sheets for motor controllers, enclosures, overcurrent protective devices, and other installed components and accessories.

C. Manufacturer's equipment seismic qualification certification.

1.06 QUALITY ASSURANCE

A. Comply with requirements of NFPA 70.

B. Manufacturer Qualifications: Company specializing in manufacturing the products specified in this section with minimum three years documented experience.

C. Product Listing Organization Qualifications: An organization recognized by OSHA as a Nationally Recognized Testing Laboratory (NRTL) and acceptable to authorities having jurisdiction.

1.07 DELIVERY, STORAGE, AND HANDLING

A. Store in a clean, dry space. Maintain factory wrapping or provide an additional heavy canvas or heavy plastic cover to protect units from dirt, water, construction debris, and traffic.

B. Handle carefully in accordance with manufacturer's written instructions to avoid damage to internal components, enclosure, and finish.

1.08 FIELD CONDITIONS

A. Maintain field conditions within required service conditions during and after installation.

PART 2 PRODUCTS

2.01 ENCLOSED CONTROLLERS

A. Provide enclosed controller assemblies consisting of all required components, control power transformers, instrumentation and control wiring, accessories, etc. as necessary for a complete operating system.

B. Provide products listed, classified, and labeled as suitable for the purpose intended.

C. Description: Enclosed controllers complying with NEMA ICS 2, and listed and labeled as complying with UL 60947-1 and UL 60947-4-1; ratings, configurations and features as indicated on the drawings.

D. Seismic Qualification: Provide controllers and associated components suitable for application under the seismic design criteria specified in Section 26 0548 where required. Include certification of compliance with submittals.

E. Service Conditions:
   1. Provide controllers and associated components suitable for operation under the following service conditions without derating:
      a. Altitude:
         1) Class 1 Km Equipment (devices utilizing power semiconductors, e.g. variable frequency controllers): Less than 3,300 feet.
         2) Class 2 Km Equipment (electromagnetic and manual devices): Less than 6,600 feet.
      b. Ambient Temperature: Between 32 degrees F and 104 degrees F.
   2. Provide controllers and associated components suitable for operation at indicated ratings under the service conditions at the installed location.

F. Short Circuit Current Rating:
   1. Provide controllers with listed short circuit current rating not less than the available fault current at the installed location as indicated on the drawings.
   2. Listed series ratings are not acceptable.

G. Selectivity: Where the requirement for selectivity is indicated, furnish products as required to achieve selective coordination.

H. Conductor Terminations: Suitable for use with the conductors to be installed.

I. Enclosures:
   1. Comply with NEMA ICS 6.
   2. Environment Type per NEMA 250: Unless otherwise indicated, as specified for the following installation locations:
      a. Indoor Clean, Dry Locations: Type 1 or Type 12.
      b. Outdoor Locations: Type 3R or Type 4.
   3. Finish: Manufacturer's standard unless otherwise indicated.

J. Instrument Transformers:
   1. Comply with IEEE C57.13.
   2. Select suitable ratio, burden, and accuracy as required for connected devices.
   3. Current Transformers: Connect secondaries to shorting terminal blocks.
   4. Potential Transformers: Include primary and secondary fuses with disconnecting means.

K. Magnetic Motor Starters: Combination type unless otherwise indicated.
   1. Combination Magnetic Motor Starters: NEMA ICS 2, Class A combination motor controllers with magnetic contactor(s), externally operable disconnect and overload relay(s).
   2. Configuration: Full-voltage non-reversing unless otherwise indicated.
   3. Use of non-standard starter sizes smaller than specified standard NEMA sizes is not permitted.
   4. Disconnects: Circuit breaker type.
      a. Circuit Breakers: Motor circuit protectors (magnetic-only) unless otherwise indicated or required.
      b. Provide externally operable handle with means for locking in the OFF position. Provide safety interlock to prevent opening the cover with the disconnect in the ON position with capability of overriding interlock for testing purposes.
      c. Provide auxiliary interlock for disconnection of external control power sources where applicable.
   5. Overload Relays: Bimetallic thermal type unless otherwise indicated.

L. General Purpose Contactors: Combination type unless otherwise indicated.
   1. Combination Contactors: NEMA ICS 2, Class A combination controllers with magnetic contactor(s) and externally operable disconnect, but without integral overload relay(s).
   2. Configuration: Full-voltage non-reversing unless otherwise indicated.
   3. Use of non-standard contactor sizes smaller than specified standard NEMA sizes is not permitted.
   4. Disconnects: Circuit breaker type.
      a. Circuit Breakers: Thermal magnetic unless otherwise indicated or required.
      b. Provide externally operable handle with means for locking in the OFF position. Provide safety interlock to prevent opening the cover with the disconnect in the ON position with capability of overriding interlock for testing purposes.
      c. Provide auxiliary interlock for disconnection of external control power sources where applicable.

M. Manual Motor Starters:
   1. Description: NEMA ICS 2, Class A manually-operated motor controllers with overload relay(s).
   2. Configuration: Non-reversing unless otherwise indicated.
   3. Fractional-Horsepower Manual Motor Starters:
      a. Furnish with toggle operator.
      b. Overload Relays: Bimetallic or melting alloy thermal type.
      c. Provide means for locking operator in the OFF position.
   4. Integral-Horsepower Manual Motor Starters:
      a. Furnish with toggle or pushbutton operator.
      b. Overload Relays: Bimetallic or melting alloy thermal type.
      c. Provide means for locking operator in the OFF position.

N. Motor-Starting Switches: Horsepower-rated switches without overload protection; toggle operator.

2.02 OVERCURRENT PROTECTIVE DEVICES

A. Overload Relays:
   1. Provide overload relays and, where applicable, associated current elements/heaters, selected according to actual installed motor nameplate data, in accordance with manufacturer's recommendations and NFPA 70; include consideration for motor service factor and ambient temperature correction, where applicable.
   2. Inverse-Time Trip Class Rating: Class 20 unless otherwise indicated or required.
   3. Trip-free operation.
   4. Visible trip indication.
   5. Resettable.
      a. Employ manual reset unless otherwise indicated.
      b. Do not employ automatic reset with two-wire control.
   6. Bimetallic Thermal Overload Relays:
      a. Interchangeable current elements/heaters.
      b. Adjustable trip; plus/minus 10 percent of nominal, minimum.
      c. Trip test function.
   7. Melting Alloy Thermal Overload Relays:
      a. Interchangeable current elements/heaters.
      b. Provide isolated alarm contact where indicated.
   8. Solid-State Overload Relays:
      a. Adjustable full load current.
      b. Phase loss protection.
      c. Phase imbalance protection.
      d. Ambient temperature insensitive.
      e. Thermal memory.

f. Trip test function.
g. Provide isolated alarm contact.

B. Fusible Disconnect Switches:
1. Description: Quick-make, quick-break, dead-front fusible switch units complying with NEMA KS 1, and listed and labeled as complying with UL 98; ratings, configurations, and features as indicated on the drawings.
2. Fuse Clips: As required to accept indicated fuses.
a. Where NEMA Class R fuses are installed, provide rejection feature to prevent installation of fuses other than Class R.
3. Provide externally operable handle with means for locking in the OFF position. Provide means for locking switch cover in the closed position. Provide safety interlock to prevent opening the cover with the switch in the ON position with capability of overriding interlock for testing purposes.

C. Circuit Breakers:
1. Interrupting Capacity (not applicable to motor circuit protectors):
a. Provide circuit breakers with interrupting capacity as required to provide the short circuit current rating indicated, but not less than specified minimum requirements.
b. Fully Rated Systems: Provide circuit breakers with interrupting capacity not less than the short circuit current rating indicated.
2. Motor Circuit Protectors:
a. Description: Instantaneous-trip circuit breakers furnished with magnetic instantaneous tripping elements for short circuit protection, but not with thermal inverse time tripping elements for overload protection; UL 489 recognized only for use as part of a listed combination motor controller with overload protection; ratings, configurations, and features as indicated on the drawings.
b. Provide field-adjustable magnetic instantaneous trip setting.
c. Provide the following features and accessories where indicated or where required to complete installation:
1) Pad-Lock Provision: For locking circuit breaker handle in OFF position.
3. Molded Case Circuit Breakers:
a. Description: Quick-make, quick-break, over center toggle, trip-free, trip-indicating circuit breakers; listed and labeled as complying with UL 489; ratings, configurations, and features as indicated on the drawings.
1) Provide thermal magnetic circuit breakers unless otherwise indicated.
b. Thermal Magnetic Circuit Breakers: For each pole, furnish thermal inverse time tripping element for overload protection and magnetic instantaneous tripping element for short circuit protection.
c. Electronic Trip Circuit Breakers: Furnish solid state, microprocessor-based, true rms sensing trip units.
d. Provide the following features and accessories where indicated or where required to complete installation:

2.03 CONTROL ACCESSORIES

A. Auxiliary Contacts:
1. Comply with NEMA ICS 5.
2. Provide number and type of contacts indicated or required to perform necessary functions, including holding (seal-in) circuit and interlocking, plus one normally open (NO) and one normally closed (NC) spare contact for each magnetic motor starter, minimum.

B. Pilot Devices:
1. Comply with NEMA ICS 5; heavy-duty type.

2. Pushbuttons: Unless otherwise indicated, provide momentary, non-illuminated type with flush button operator; normally open or normally closed as indicated or as required.
3. Selector Switches: Unless otherwise indicated, provide maintained, non-illuminated type with knob operator; number of switch positions as indicated or as required.
4. Indicating Lights: Push-to-test type unless otherwise indicated.
5. Provide LED lamp source for indicating lights and illuminated devices.

C. Control and Timing Relays:
1. Comply with NEMA ICS 5.
2. Provide number and type of relays indicated or required to perform necessary functions.

D. Control Power Transformers:
1. Size to accommodate burden of contactor coil(s) and all connected auxiliary devices.
2. Include primary and secondary fuses.

PART 3 EXECUTION

3.01 EXAMINATION

A. Verify that field measurements are as indicated.

B. Verify that ratings of enclosed controllers are consistent with the indicated requirements.

C. Verify that mounting surfaces are ready to receive enclosed controllers.

D. Verify that conditions are satisfactory for installation prior to starting work.

3.02 INSTALLATION

A. Install products in accordance with manufacturer's instructions.

B. Install controllers in accordance with NECA 1 (general workmanship).

C. Arrange equipment to provide minimum clearances in accordance with manufacturer's instructions and NFPA 70.

D. Provide required support and attachment in accordance with Section 26 0529.

E. Install enclosed controllers plumb and level.

F. Provide grounding and bonding in accordance with Section 26 0526.

G. Install all field-installed devices, components, and accessories.

H. Provide fuses complying with Section 26 2813 for fusible switches as indicated.

I. Where accessories are not self-powered, provide control power source as indicated or as required to complete installation.

J. Set field-adjustable controllers and associated components according to installed motor requirements, in accordance with manufacturer's recommendations and NFPA 70.

K. Set field-adjustable circuit breaker tripping function settings as determined by overcurrent protective device coordination study performed in accordance with Section 26 0573.

3.03 FIELD QUALITY CONTROL

A. Inspect and test in accordance with NETA ATS, except Section 4.

B. Motor Starters: Perform inspections and tests listed in NETA ATS, Section 7.16.1.1. Tests listed as optional are not required.

C. Fusible Switches: Perform inspections and tests listed in NETA ATS, Section 7.5.1.1.

D. Correct deficiencies and replace damaged or defective enclosed controllers or associated components.

3.04 ADJUSTING

A. Adjust tightness of mechanical and electrical connections to manufacturer's recommended torque settings.

3.05 CLEANING

A. Clean dirt and debris from controller enclosures and components according to manufacturer's instructions.

B. Repair scratched or marred exterior surfaces to match original factory finish.

3.06 CLOSEOUT ACTIVITIES

A. Training: Train Owner's personnel on operation, adjustment, and maintenance of enclosed controllers and associated devices.
   1. Use operation and maintenance manual as training reference, supplemented with additional training materials as required.
   2. Provide minimum of two hours of training.
   3. Instructor: Manufacturer's authorized representative.
   4. Location: At project site.

3.07 PROTECTION

A. Protect installed enclosed controllers from subsequent construction operations.

END OF SECTION

SECTION 26 3213
ENGINE GENERATORS

PART 1 GENERAL

1.01 SECTION INCLUDES

A. Packaged engine generator system and associated components and accessories:
   1. Engine and engine accessory equipment.
   2. Alternator (generator).
   3. Generator set control system.
   4. Generator set enclosure.

1.02 RELATED REQUIREMENTS

A. Section 03 3000 - Cast-in-Place Concrete: Concrete equipment pads.

B. Section 23 1123 - Facility Natural-Gas Piping.

C. Section 23 5100 - Breechings, Chimneys, and Stacks: Engine exhaust piping.

D. Section 26 0526 - Grounding and Bonding for Electrical Systems.

E. Section 26 0529 - Hangers and Supports for Electrical Systems.

F. Section 26 0553 - Identification for Electrical Systems: Identification products and requirements.

1.03 REFERENCE STANDARDS

A. ASTM D975 - Standard Specification for Diesel Fuel 2021.

B. NECA 1 - Standard for Good Workmanship in Electrical Construction 2015.

C. NECA/EGSA 404 - Standard for Installing Generator Sets 2014.

D. NEMA MG 1 - Motors and Generators 2021.

E. NFPA 30 - Flammable and Combustible Liquids Code 2021, with Amendment (2020).

F. NFPA 37 - Standard for the Installation and Use of Stationary Combustion Engines and Gas Turbines 2021.

G. NFPA 70 - National Electrical Code Most Recent Edition Adopted by Authority Having Jurisdiction, Including All Applicable Amendments and Supplements.

H. NFPA 99 - Health Care Facilities Code 2021, with Amendment.

I. NFPA 110 - Standard for Emergency and Standby Power Systems 2022.

J. UL 1236 - Battery Chargers for Charging Engine-Starter Batteries Current Edition, Including All Revisions.

K. UL 2200 - Stationary Engine Generator Assemblies Current Edition, Including All Revisions.

1.04 SUBMITTALS

A. See Section 01 3000 - Administrative Requirements, for submittal procedures.

B. Product Data: Provide manufacturer's standard catalog pages and data sheets for each product, including ratings, configurations, dimensions, finishes, weights, service condition requirements, and installed features. Include alternator starting capabilities, engine fuel consumption rates, and cooling, combustion air, and exhaust requirements.

C. Shop Drawings: Include dimensioned plan views and sections indicating locations of system components, required clearances, and field connection locations. Include system interconnection schematic diagrams showing all factory and field connections.

D. Provide copy of this specification with "C" (for "Comply") "N" (for "Non-Comply") or "N/A" (for "Not Applicable) adjacent to every paragraph to indicate compliance with specification.

E. Manufacturer's factory emissions certification.

1.05 QUALITY ASSURANCE

A. Comply with the following:
   1. NFPA 70 (National Electrical Code).
   2. NFPA 37 (Standard for the Installation and Use of Stationary Combustion Engines and Gas Turbines).
   3. NFPA 30 (Flammable and Combustible Liquids Code).

B. Product Listing Organization Qualifications: An organization recognized by OSHA as a Nationally Recognized Testing Laboratory (NRTL) and acceptable to authorities having jurisdiction.

1.06 DELIVERY, STORAGE, AND HANDLING

A. Receive, inspect, handle, and store generator sets in accordance with manufacturer's instructions and NECA/EGSA 404.

B. Store in a clean, dry space. Maintain factory wrapping or provide an additional heavy canvas or heavy plastic cover to protect units from dirt, water, construction debris, and traffic.

C. Handle carefully in accordance with manufacturer's instructions to avoid damage to generator set components, enclosure, and finish.

1.07 FIELD CONDITIONS

A. Maintain field conditions within manufacturer's required service conditions during and after installation.

PART 2 PRODUCTS

2.01 PACKAGED ENGINE GENERATOR SYSTEM

A. Provide new engine generator system consisting of all required equipment, sensors, conduit, boxes, wiring, piping, supports, accessories, system programming, etc. as necessary for a complete operating system that provides the functional intent indicated.

B. Provide products listed, classified, and labeled as suitable for the purpose intended.

C. System Description:
   1. Application: Emergency/standby.
   2. Configuration: Single packaged engine generator set operated independently (not in parallel).

D. Packaged Engine Generator Set:
   1. Type: Gaseous (spark ignition).
   2. Power Rating: As indicated on drawings, standby.
   3. Voltage: As indicated on drawings.
   4. Main Line Circuit Breaker:
      a. Type: Thermal magnetic.
      b. Trip Rating: Select according to generator set rating.

E. Generator Set General Requirements:
   1. Prototype tested in accordance with NFPA 110 for Level 1 systems.
   2. Factory-assembled, with components mounted on suitable base.
   3. List and label engine generator assembly as complying with UL 2200.
   4. Power Factor: Unless otherwise indicated, specified power ratings are at 0.8 power factor for three phase voltages and 1.0 power factor for single phase voltages.
   5. Provide suitable guards to protect personnel from accidental contact with rotating parts, hot piping, and other potential sources of injury.
   6. Main Line Circuit Breakers: Provide factory-installed line side connections with suitable lugs for load side connections.

F. Service Conditions: Provide engine generator system and associated components suitable for operation under the service conditions at the installed location.

G. Starting and Load Acceptance Requirements:
1. Cranking Method: Cycle cranking complying with NFPA 110 (15 second crank period, followed by 15 second rest period, with cranking limiter time-out after 3 cycles), unless otherwise required.
2. Cranking Limiter Time-Out: If generator set fails to start after specified cranking period, indicate overcrank alarm condition and lock-out generator set from further cranking until manually reset.
3. Start Time: Capable of starting and achieving conditions necessary for load acceptance within 10 seconds (NFPA 110, Type 10).
4. Maximum Load Step: Supports 100 percent of rated load in one step.

H. Exhaust Emissions Requirements:
1. Comply with federal (EPA), state, and local regulations applicable at the time of commissioning; include factory emissions certification with submittals.
2. Do not make modifications affecting generator set factory emissions certification without approval of manufacturer and Engineer. Where such modifications are made, provide field emissions testing as necessary for certification.

2.02 ENGINE AND ENGINE ACCESSORY EQUIPMENT

A. Provide engine with adequate horsepower to achieve specified power output at rated speed, accounting for alternator efficiency and parasitic loads.

B. Engine Fuel System - Diesel (Compression Ignition):
1. Fuel Source: Diesel, ASTM D975 No. 2-D or approved cold weather diesel blends.
2. Fuel Storage: Sub-base fuel tank.
3. Engine Fuel Supply: Provide engine-driven, positive displacement fuel pump with replaceable fuel filter(s), water separator, check valve to secure prime, manual fuel priming pump, and relief-bypass valve. Provide fuel cooler where recommended by manufacturer.
4. Engine Fuel Connections: Provide suitable, approved flexible fuel lines for coupling engine to fuel source.

C. Engine Fuel System - Gaseous (Spark Ignition):
1. Fuel Source: Natural gas.
2. Engine Fuel Connections: Provide suitable, approved flexible fuel lines for coupling engine to fuel source.
3. Provide components/features indicated and as necessary for operation and/or required by applicable codes, including but not limited to:
a. Carburetor.
b. Gas pressure regulators.
c. Fuel shutoff control valves.
d. Low gas pressure switches.

D. Engine Starting System:
1. System Type: Electric, with DC solenoid-activated starting motor(s).
2. Battery(s):
a. Battery Type: Lead-acid.
b. Battery Capacity: Size according to manufacturer's recommendations for achieving starting and load acceptance requirements under worst case ambient temperature; capable of providing cranking through two complete periods of cranking limiter time-outs without recharging.
c. Provide battery rack, cables, and connectors suitable for the supplied battery(s); size battery cables according to manufacturer's recommendations for cable length to be installed.
3. Battery-Charging Alternator: Engine-driven, with integral solid-state voltage regulation.

4. Battery Charger:
    a. Provide dual rate battery charger with automatic float and equalize charging modes and minimum rating of 10 amps; suitable for maintaining the supplied battery(s) at full charge without manual intervention.
    b. Capable of returning supplied battery(s) from fully discharged to fully charged condition within 24 hours, as required by NFPA 110 for Level 1 applications while carrying normal loads.
    c. Recognized as complying with UL 1236.
    d. Furnished with integral overcurrent protection; current limited to protect charger during engine cranking; reverse polarity protection.
    e. Provide integral DC output ammeter and voltmeter with five percent accuracy.
    f. Provide alarm output contacts as necessary for alarm indications.

E. Engine Speed Control System (Governor):
1. Single Engine Generator Sets (Not Operated in Parallel): Provide electronic isochronous governor for controlling engine speed/alternator frequency.
2. Frequency Regulation, Electronic Isochronous Governors: No change in frequency from no load to full load; plus/minus 0.25 percent at steady state.

F. Engine Lubrication System:
1. System Type: Full pressure, with engine-driven, positive displacement lubrication oil pump, replaceable full-flow oil filter(s), and dip-stick for oil level indication. Provide oil cooler where recommended by manufacturer.

G. Engine Cooling System:
1. System Type: Closed-loop, liquid-cooled, with unit-mounted radiator/fan and engine-driven coolant pump; suitable for providing adequate cooling while operating at full load under worst case ambient temperature.
2. Fan Guard: Provide suitable guard to protect personnel from accidental contact with fan.

H. Engine Air Intake and Exhaust System:
1. Air Intake Filtration: Provide engine-mounted, replaceable, dry element filter.
2. Engine Exhaust Connection: Provide suitable, approved flexible connector for coupling engine to exhaust system.

2.03 ALTERNATOR (GENERATOR)

A. Alternator: 4-pole, 1800 rpm (60 Hz output) revolving field, synchronous generator complying with NEMA MG 1; connected to engine with flexible coupling; voltage output configuration as indicated, with reconnectable leads for 3 phase alternators.

B. Exciter:
1. Exciter Type: Brushless; provide permanent magnet generator (PMG) excitation system; self-excited (shunt) systems are not permitted.
2. PMG Excitation Short-Circuit Current Support: Capable of sustaining 300 percent of rated output current for 10 seconds.
3. Voltage Regulation (with PMG excitation): Plus/minus 0.5 percent for any constant load from no load to full load.

C. Temperature Rise: Comply with UL 2200.

D. Insulation System: NEMA MG 1, Class H; suitable for alternator temperature rise.

E. Enclosure: NEMA MG 1, drip-proof.

F. Total Harmonic Distortion: Not greater than five percent.

2.04 GENERATOR SET CONTROL SYSTEM

A. Provide microprocessor-based control system for automatic control, monitoring, and protection of generator set. Include sensors, wiring, and connections necessary for functions/indications specified.

B. Control Panel:
   1. Control Panel Mounting: Unit-mounted unless otherwise indicated; vibration isolated.
   2. Generator Set Control Functions:
      a. Automatic Mode: Initiates generator set start/shutdown upon receiving corresponding signal from remote device (e.g. automatic transfer switch).
      b. Manual Mode: Initiates generator set start/shutdown upon direction from operator.
      c. Reset Mode: Clears all faults, allowing generator set restart after a shutdown.
      d. Emergency Stop: Immediately shuts down generator set (without time delay) and prevents automatic restarting until manually reset.
      e. Cycle Cranking: Programmable crank time, rest time, and number of cycles.
      f. Time Delay: Programmable for shutdown (engine cooldown) and start (engine warmup).
      g. Voltage Adjustment: Adjustable through range of plus/minus 5 percent.
   3. Generator Set Status Indications:
      a. Voltage (Volts AC): Line-to-line, line-to-neutral for each phase.
      b. Current (Amps): For each phase.
      c. Frequency (Hz).
      d. Real power (W/kW).
      e. Reactive power (VAR/kVAR).
      f. Apparent power (VA/kVA).
      g. Power factor.
      h. Duty Level: Actual load as percentage of rated power.
      i. Engine speed (RPM).
      j. Battery voltage (Volts DC).
      k. Engine oil pressure.
      l. Engine coolant temperature.
      m. Engine run time.
      n. Generator powering load (position signal from transfer switch).
   4. Generator Set Protection and Warning/Shutdown Indications:
      a. Comply with NFPA 110; configurable for NFPA 110 Level 1 or Level 2, or NFPA 99 systems including but not limited to the following protections/indications:
         1) Overcrank (shutdown).
         2) Low coolant temperature (warning).
         3) High coolant temperature (warning).
         4) High coolant temperature (shutdown).
         5) Low oil pressure (shutdown).
         6) Overspeed (shutdown).
         7) Low fuel level (warning).
         8) Low coolant level (warning/shutdown).
         9) Generator control not in automatic mode (warning).
         10) High battery voltage (warning).
         11) Low cranking voltage (warning).
         12) Low battery voltage (warning).
         13) Battery charger failure (warning).
      b. In addition to NFPA 110 requirements, provide the following protections/indications:
         1) High AC voltage (shutdown).
         2) Low AC voltage (shutdown).

3) High frequency (shutdown).
4) Low frequency (shutdown).
5) Overcurrent (shutdown).

c. Provide contacts for local and remote common alarm.
d. Provide lamp test function that illuminates all indicator lamps.

5. Other Control Panel Features:
a. Event log.

2.05 GENERATOR SET ENCLOSURE

A. Enclosure Type: Sound attenuating, weather protective.

B. Enclosure Material: Steel or aluminum.

C. Hardware Material: Stainless steel.

D. Color: Manufacturer's standard.

E. Access Doors: Lockable, with all locks keyed alike.

F. Openings: Designed to prevent bird/rodent entry.

G. External Drains: Extend oil and coolant drain lines to exterior of enclosure for maintenance service.

H. Sound Attenuating Enclosures: Line enclosure with non-hydroscopic, self-extinguishing sound-attenuating material.

PART 3 EXECUTION

3.01 EXAMINATION

A. Verify that field measurements are as indicated.

B. Verify that the ratings and configurations of generator sets and auxiliary equipment are consistent with the indicated requirements.

C. Verify that rough-ins for field connections are in the proper locations.

D. Verify that mounting surfaces are ready to receive equipment.

E. Verify that conditions are satisfactory for installation prior to starting work.

3.02 INSTALLATION

A. Perform work in accordance with NECA 1 (general workmanship).

B. Install products in accordance with manufacturer's instructions.

C. Install generator sets and associated accessories in accordance with NECA/EGSA 404.

D. Arrange equipment to provide minimum clearances and required maintenance access.

E. Unless otherwise indicated, mount generator set on properly sized, minimum 6 inch high concrete pad constructed in accordance with Section 03 3000.

F. Provide required support and attachment in accordance with Section 26 0529.

G. Use manufacturer's recommended oil and coolant, suitable for the worst case ambient temperatures.

H. Provide natural gas piping in accordance with Section 23 1123.

I. Provide engine exhaust piping in accordance with Section 23 5100, where not factory installed.
1. Include piping expansion joints, piping insulation, thimble, condensation trap/drain, rain cap, hangers/supports, etc. as indicated or as required.
2. Do not exceed manufacturer's maximum back pressure requirements.

J. Provide grounding and bonding in accordance with Section 26 0526.

K. Identify system wiring and components in accordance with Section 26 0553.

3.03 FIELD QUALITY CONTROL

A. See Section 01 4000 - Quality Requirements, for additional requirements.

B. Notify Owner and Architect at least two weeks prior to scheduled inspections and tests.

C. Notify authorities having jurisdiction and comply with their requirements for scheduling inspections and tests and for observation by their personnel.

D. Provide all equipment, tools, and supplies required to accomplish inspection and testing, including load bank and fuel.

E. Preliminary inspection and testing to include, at a minimum:
   1. Inspect each system component for damage and defects.
   2. Verify tightness of mechanical and electrical connections are according to manufacturer's recommended torque settings.
   3. Check for proper oil and coolant levels.

F. Prepare and start system in accordance with manufacturer's instructions.

G. Provide field emissions testing where necessary for certification.

H. Correct defective work, adjust for proper operation, and retest until entire system complies with Contract Documents.

3.04 CLEANING

A. Clean exposed surfaces to remove dirt, paint, or other foreign material and restore to match original factory finish.

3.05 PROTECTION

A. Protect installed engine generator system from subsequent construction operations.

END OF SECTION

SECTION 26 3600
TRANSFER SWITCHES

PART 1 GENERAL

1.01 SECTION INCLUDES

A. Transfer switches for low-voltage (600 V and less) applications and associated accessories:
   1. Automatic transfer switches.
   2. Includes service entrance rated transfer switches.

1.02 RELATED REQUIREMENTS

A. Section 03 3000 - Cast-in-Place Concrete: Concrete equipment pads.

B. Section 26 0526 - Grounding and Bonding for Electrical Systems.

C. Section 26 0529 - Hangers and Supports for Electrical Systems.

D. Section 26 0553 - Identification for Electrical Systems: Identification products and requirements.

E. Section 26 0573 - Power System Studies: Additional criteria for the selection of equipment specified in this section.

F. Section 26 2100 - Low-Voltage Electrical Service Entrance.

G. Section 26 3213 - Engine Generators: For interface with transfer switches.

1.03 REFERENCE STANDARDS

A. NECA 1 - Standard for Good Workmanship in Electrical Construction 2015.

B. NEMA 250 - Enclosures for Electrical Equipment (1000 Volts Maximum) 2020.

C. NEMA ICS 10 Part 1 - Industrial Control and Systems Part 1: Electromechanical AC Transfer Switch Equipment 2020.

D. UL 869A - Reference Standard for Service Equipment Current Edition, Including All Revisions.

E. UL 1008 - Transfer Switch Equipment Current Edition, Including All Revisions.

PART 2 PRODUCTS

2.01 TRANSFER SWITCHES

A. Provide complete power transfer system consisting of all required equipment, conduit, boxes, wiring, supports, accessories, system programming, etc. as necessary for a complete operating system that provides the functional intent indicated.

B. Provide products listed, classified, and labeled as suitable for the purpose intended.

C. Construction Type: Either "contactor type" (open contact) or "breaker type" (enclosed contact) transfer switches complying with specified requirements are acceptable.

D. Comply with NEMA ICS 10 Part 1, and list and label as complying with UL 1008 for the classification of the intended application (e.g. emergency, optional standby).

E. Do not use double throw safety switches or other equipment not specifically designed for power transfer applications and listed as transfer switch equipment.

F. Load Classification: Classified for total system load (any combination of motor, electric discharge lamp, resistive, and tungsten lamp loads with tungsten lamp loads not exceeding 30 percent of the continuous current rating) unless otherwise indicated or required.

G. Switching Methods:
   1. Open Transition:
      a. Provide break-before-make transfer without a neutral position that is not connected to either source, and with interlocks to prevent simultaneous connection of the load to both sources.

2. Obtain control power for transfer operation from line side of source to which the load is to be transferred.

H. Service Conditions: Provide transfer switches suitable for continuous operation at indicated ratings under the service conditions at the installed location.

I. Enclosures:
1. Environment Type per NEMA 250: Unless otherwise indicated, as specified for the following installation locations:
2. Finish: Manufacturer's standard unless otherwise indicated.

J. Short Circuit Current Rating:
1. Withstand and Closing Rating: Provide transfer switches, when protected by the supply side overcurrent protective devices to be installed, with listed withstand and closing rating not less than the available fault current at the installed location as determined by short circuit study performed in accordance with Section 26 0573.

K. Automatic Transfer Switches:
1. Description: Transfer switches with automatically initiated transfer between sources; electrically operated and mechanically held.
2. Control Functions:
a. Automatic mode.
b. Test Mode: Simulates failure of primary/normal source.
c. Voltage and Frequency Sensing:
1) Undervoltage sensing for each phase of primary/normal source; adjustable dropout/pickup settings.
2) Undervoltage sensing for alternate/emergency source; adjustable dropout/pickup settings.
3) Underfrequency sensing for alternate/emergency source; adjustable dropout/pickup settings.
d. Outputs:
1) Contacts for engine start/shutdown (except where direct generator communication interface is provided).
2) Auxiliary contacts; one set(s) for each switch position.
e. Adjustable Time Delays:
1) Engine generator start time delay; delays engine start signal to override momentary primary/normal source failures.
2) Transfer to alternate/emergency source time delay.
3) Retransfer to primary/normal source time delay.
4) Engine generator cooldown time delay; delays engine shutdown following retransfer to primary/normal source to permit generator to run unloaded for cooldown period.
f. In-Phase Monitor (Open Transition Transfer Switches): Monitors phase angle difference between sources for initiating in-phase transfer.
g. Engine Exerciser: Provides programmable scheduled exercising of engine generator selectable with or without transfer to load; provides memory retention during power outage.
3. Status Indications:
a. Connected to alternate/emergency source.
b. Connected to primary/normal source.
c. Alternate/emergency source available.
4. Automatic Sequence of Operations:
a. Upon failure of primary/normal source for a programmable time period (engine generator start time delay), initiate starting of engine generator where applicable.

b. When alternate/emergency source is available, transfer load to alternate/emergency source after programmable time delay.
c. When primary/normal source has been restored, retransfer to primary/normal source after a programmable time delay. Bypass time delay if alternate/emergency source fails and primary/normal source is available.
d. Where applicable, initiate shutdown of engine generator after programmable engine cooldown time delay.

L. Service Entrance Rated Transfer Switches:
1. Furnished with integral disconnecting and overcurrent protective device on the primary/normal source and with ground-fault protection where indicated.
2. Listed and labeled as suitable for use as service equipment according to UL 869A.

PART 3 EXECUTION

3.01 EXAMINATION

A. Verify that field measurements are as indicated.

B. Verify that the ratings and configurations of transfer switches are consistent with the indicated requirements.

C. Verify that rough-ins for field connections are in the proper locations.

D. Verify that mounting surfaces are ready to receive transfer switches.

E. Verify that conditions are satisfactory for installation prior to starting work.

3.02 INSTALLATION

A. Perform work in accordance with NECA 1 (general workmanship).

B. Install products in accordance with manufacturer's instructions.

C. Arrange equipment to provide minimum clearances and required maintenance access.

D. Provide required support and attachment in accordance with Section 26 0529.

E. Install transfer switches plumb and level.

F. Unless otherwise indicated, mount floor-mounted transfer switches on properly sized 3 inch high concrete pad constructed in accordance with Section 03 3000.

G. Provide grounding and bonding in accordance with Section 26 0526.

H. Identify transfer switches and associated system wiring in accordance with Section 26 0553.

3.03 CLEANING

A. Clean exposed surfaces to remove dirt, paint, or other foreign material and restore to match original factory finish.

3.04 PROTECTION

A. Protect installed transfer switches from subsequent construction operations.

END OF SECTION

SECTION 26 4300
SURGE PROTECTIVE DEVICES

PART 1 GENERAL

1.01 SECTION INCLUDES

A. Surge protective devices for service entrance locations.

B. Surge protective devices for distribution locations.

C. Surge protective devices for branch panelboard locations.

1.02 RELATED REQUIREMENTS

A. Section 26 0526 - Grounding and Bonding for Electrical Systems.

B. Section 26 2416 - Panelboards.

1.03 ABBREVIATIONS AND ACRONYMS

A. EMI/RFI: Electromagnetic Interference/Radio Frequency Interference.

B. SPD: Surge Protective Device.

1.04 REFERENCE STANDARDS

A. NECA 1 - Standard for Good Workmanship in Electrical Construction 2015.

B. NEMA 250 - Enclosures for Electrical Equipment (1000 Volts Maximum) 2020.

C. NETA ATS - Standard For Acceptance Testing Specifications For Electrical Power Equipment And Systems 2021.

D. NFPA 70 - National Electrical Code Most Recent Edition Adopted by Authority Having Jurisdiction, Including All Applicable Amendments and Supplements.

E. UL 1449 - Standard for Surge Protective Devices Current Edition, Including All Revisions.

1.05 ADMINISTRATIVE REQUIREMENTS

A. Coordination: Coordinate size and location of overcurrent device compatible with the actual surge protective device and location to be installed. Notify Architect of any conflicts or deviations from Contract Documents to obtain direction prior to ordering equipment.

1.06 SUBMITTALS

A. Product Data: Include detailed component information, voltage, surge current ratings, repetitive surge current capacity, voltage protection rating (VPR) for all protection modes, maximum continuous operating voltage (MCOV), nominal discharge current (I-n), short circuit current rating (SCCR), connection means including any required external overcurrent protection, enclosure ratings, outline and support point dimensions, weight, service condition requirements, and installed features.

B. Shop Drawings: Include wiring diagrams showing all factory and field connections with wire and circuit breaker/fuse sizes.

C. Project Record Documents: Record actual connections and locations of surge protective devices.

1.07 QUALITY ASSURANCE

A. Comply with requirements of NFPA 70.

B. Manufacturer Qualifications: Company specializing in manufacturing the products specified in this section with minimum three years documented experience.

C. Product Listing Organization Qualifications: An organization recognized by OSHA as a Nationally Recognized Testing Laboratory (NRTL) and acceptable to authorities having jurisdiction.

1.08 DELIVERY, STORAGE, AND PROTECTION

A. Store in a clean, dry space in accordance with manufacturer's written instructions.

1.09 FIELD CONDITIONS

A. Maintain field conditions within manufacturer's required service conditions during and after installation.

1.10 WARRANTY

A. Manufacturer's Warranty: Provide minimum five year warranty covering repair or replacement of surge protective devices showing evidence of failure due to defective materials or workmanship.

B. Exclude surge protective devices from any clause limiting warranty responsibility for acts of nature, including lightning, stated elsewhere.

PART 2 PRODUCTS

2.01 MANUFACTURERS

A. Source Limitations: Furnish surge protective devices produced by a single manufacturer and obtained from a single supplier.

2.02 SURGE PROTECTIVE DEVICES - GENERAL REQUIREMENTS

A. Description: Factory-assembled surge protective devices (SPDs) for 60 Hz service; listed, classified, and labeled as suitable for the purpose intended; system voltage as indicated on the drawings.

B. Unless otherwise indicated, provide field-installed, externally-mounted or factory-installed, internally-mouonted SPDs.

C. List and label as complying with UL 1449, Type 1 when connected on line side of service disconnect overcurrent device and Type 1 or 2 when connected on load side of service disconnect overcurrent device.

D. Protected Modes:
   1. Wye Systems: L-N, L-G, N-G, L-L.

E. UL 1449 Voltage Protection Ratings (VPRs):
   1. 208Y/120V System Voltage: Not more than 1,000 V for L-N, L-G, and N-G modes and 1,200 V for L-L mode.
   2. 480Y/277V System Voltage: Not more than 1,500 V for L-N, L-G, and N-G modes and 2,000 V for L-L mode.

F. UL 1449 Maximum Continuous Operating Voltage (MCOV): Not less than 115% of nominal system voltage.

G. Enclosure Environment Type per NEMA 250: Unless otherwise indicated, as specified for the following installation locations:
   1. Indoor clean, dry locations: Type 1.
   2. Outdoor locations: Type 3R.

H. Mounting for Field-installed, Externally Mounted SPDs: Unless otherwise indicated, as specified for the following locations:
   1. Provide surface-mounted SPD where mounted in non-public areas or adjacent to surface-mounted equipment.
   2. Provide flush-mounted SPD where mounted in public areas or adjacent to flush-mounted equipment.

I. Equipment Containing Factory-installed, Internally Mounted SPDs: Listed and labeled as a complete assembly including SPD.
   1. Panelboards: See Section 26 2416.

2.03 SURGE PROTECTIVE DEVICES FOR SERVICE ENTRANCE LOCATIONS

A. Surge Protective Device:
   1. Protection Circuits: Field-replaceable modular or non-modular.

2. Surge Current Rating: Not less than 120 kA per mode/240 kA per phase.
3. Repetitive Surge Current Capacity: Not less than 5,000 impulses.
4. UL 1449 Nominal Discharge Current (I-n): 20 kA.
5. UL 1449 Short Circuit Current Rating (SCCR): Not less than the available fault current at the installed location as indicated on the drawings.
6. Diagnostics:
   a. Protection Status Monitoring: Provide indicator lights to report the protection for each phase.
   b. Alarm Notification: Provide indicator light and audible alarm to report alarm condition. Provide button to manually silence audible alarm.
   c. Surge Counter: Provide surge event counter with manual reset button, surge count retention upon power loss, and six digit LCD display that indicates quantity of surge events.

2.04 SURGE PROTECTIVE DEVICES FOR DISTRIBUTION LOCATIONS

A. Distribution locations include SPDs connected to distribution panelboards.

B. Surge Protective Device:
1. Protection Circuits: Field-replaceable modular or non-modular.
2. Surge Current Rating: Not less than 80 kA per mode/160 kA per phase.
3. Repetitive Surge Current Capacity: Not less than 3,500 impulses.
4. UL 1449 Nominal Discharge Current (I-n): 20 kA.
5. UL 1449 Short Circuit Current Rating (SCCR): Not less than the available fault current at the installed location as indicated on the drawings.
6. Diagnostics:
   a. Protection Status Monitoring: Provide indicator lights to report the protection status for each phase.
   b. Alarm Notification: Provide indicator light and audible alarm to report alarm condition. Provide button to manually silence audible alarm.
   c. Surge Counter: Provide surge event counter with manual reset button, surge count retention upon power loss, and six digit LCD display that indicates quantity of surge events.

2.05 SURGE PROTECTIVE DEVICES FOR BRANCH PANELBOARD LOCATIONS

A. Surge Protective Device:
1. Protection Circuits: Field-replaceable modular or non-modular.
2. Surge Current Rating: Not less than 60 kA per mode/120 kA per phase.
3. Repetitive Surge Current Capacity: Not less than 2,000 impulses.
4. UL 1449 Nominal Discharge Current (I-n): 20 kA.
5. UL 1449 Short Circuit Current Rating (SCCR): Not less than the available fault current at the installed location as indicated on the drawings.
6. Diagnostics:
   a. Protection Status Monitoring: Provide indicator lights to report the protection status for each phase.
   b. Alarm Notification: Provide indicator light and audible alarm to report alarm condition. Provide button to manually silence audible alarm.
   c. Surge Counter: Provide surge event counter with manual reset button, surge count retention upon power loss, and six digit LCD display that indicates quantity of surge events.

PART 3 EXECUTION

3.01 EXAMINATION

A. Verify that field measurements are as indicated.

B. Verify that the service voltage and configuration marked on the SPD are consistent with the service voltage and configuration at the location to be installed.

C. Verify that electrical equipment is ready to accept connection of the SPD and that installed overcurrent device is consistent with requirements of drawings and manufacturer's instructions.

D. Verify system grounding and bonding is in accordance with Section 26 0526, including bonding of neutral and ground for service entrance and separately derived systems where applicable. Do not energize SPD until deficiencies have been corrected.

E. Verify that conditions are satisfactory for installation prior to starting work.

3.02 INSTALLATION

A. Perform work in accordance with NECA 1 (general workmanship).

B. Install products in accordance with manufacturer's instructions.

C. Arrange equipment to provide minimum clearances in accordance with manufacturer's instructions and NFPA 70.

D. Unless indicated otherwise, connect service entrance surge protective device on load side of service disconnect main overcurrent device.

E. Provide conductors with minimum ampacity as required by NFPA 70 and not less than manufacturer's recommended minimum conductor size.

F. Install conductors between SPD and equipment terminations as short and straight as possible, not exceeding manufacturer's recommended maximum conductor length. Breaker locations may be reasonably rearranged in order to provide leads as short and straight as possible. Twist conductors together to reduce inductance.

G. Do not energize SPD until bonding of neutral and ground for service entrance and separately derived systems is complete in accordance with Section 26 0526 where applicable. Replace SPDs damaged by improper or missing neutral-ground bond.

H. Disconnect SPD prior to performing any high potential testing. Replace SPDs damaged by performing high potential testing with SPD connected.

3.03 FIELD QUALITY CONTROL

A. Inspect and test in accordance with NETA ATS, except Section 4.

B. Perform inspections and tests listed in NETA ATS Section 7.19.1.

C. Procure services of a qualified manufacturer's representative to observe installation and assist in inspection, testing, and adjusting. Include manufacturer's reports with field quality control submittals.

3.04 CLEANING

A. Repair scratched or marred exterior surfaces to match original factory finish.

END OF SECTION

SECTION 26 5100
INTERIOR LIGHTING

PART 1 GENERAL

1.01 SECTION INCLUDES

A. Interior luminaires.

B. Exit signs.

C. Ballasts and drivers.

D. Accessories.

1.02 RELATED REQUIREMENTS

A. Section 23 3600 - Air Terminal Units: Air distribution accessories for air handling luminaires.

B. Section 26 0529 - Hangers and Supports for Electrical Systems.

C. Section 26 0533.16 - Boxes for Electrical Systems.

D. Section 26 0548 - Vibration and Seismic Controls for Electrical Systems.

E. Section 26 0553 - Identification for Electrical Systems: Identification products and requirements.

F. Section 26 0923 - Lighting Control Devices.

G. Section 26 2726 - Wiring Devices: Manual wall switches and wall dimmers.

H. Section 26 5600 - Exterior Lighting.

1.03 REFERENCE STANDARDS

A. IEC 60529 - Degrees of Protection Provided by Enclosures (IP Code) 2013 (Corrigendum 2019).

B. IES LM-79 - Approved Method: Optical and Electrical Measurements of Solid-State Lighting Products 2019.

C. IES LM-80 - Approved Method: Measuring Maintenance of Light Output Characteristics of Solid-State Light Sources 2021.

D. NECA 1 - Standard for Good Workmanship in Electrical Construction 2015.

E. NECA/IESNA 500 - Standard for Installing Indoor Lighting Systems 2006.

F. NECA/IESNA 502 - Standard for Installing Industrial Lighting Systems 1999 (Reaffirmed 2006).

G. NEMA 410 - Performance Testing for Lighting Controls and Switching Devices with Electronic Drivers and Disharge Ballasts 2020.

H. NEMA LE 4 - Recessed Luminaires, Ceiling Compatibility 2012 (Reaffirmed 2018).

I. NFPA 70 - National Electrical Code Most Recent Edition Adopted by Authority Having Jurisdiction, Including All Applicable Amendments and Supplements.

J. NFPA 101 - Life Safety Code Most Recent Edition Adopted by Authority Having Jurisdiction, Including All Applicable Amendments and Supplements.

K. UL 924 - Emergency Lighting and Power Equipment Current Edition, Including All Revisions.

L. UL 1598 - Luminaires Current Edition, Including All Revisions.

M. UL 8750 - Light Emitting Diode (LED) Equipment for Use in Lighting Products Current Edition, Including All Revisions.

1.04 ADMINISTRATIVE REQUIREMENTS

A. Coordination:

1. Coordinate the installation of luminaires with mounting surfaces installed under other sections or by others. Coordinate the work with placement of supports, anchors, etc. required for mounting.

Coordinate compatibility of luminaires and associated trims with mounting surfaces at installed locations.

2. Coordinate the placement of luminaires with structural members, ductwork, piping, equipment, diffusers, fire suppression system components, and other potential conflicts installed under other sections or by others.
3. Coordinate the placement of exit signs with furniture, equipment, signage or other potential obstructions to visibility installed under other sections or by others.
4. Notify Architect of any conflicts or deviations from Contract Documents to obtain direction prior to proceeding with work.

1.05 SUBMITTALS

A. Shop Drawings:
   1. Provide photometric calculations where luminaires are proposed for substitution.

B. Product Data: Provide manufacturer's standard catalog pages and data sheets including detailed information on luminaire construction, dimensions, ratings, finishes, mounting requirements, listings, service conditions, photometric performance, installed accessories, and ceiling compatibility; include model number nomenclature clearly marked with all proposed features.
   1. LED Luminaires:
      a. Include estimated useful life, calculated based on IES LM-80 test data.
      b. Include IES LM-79 test report upon request.

C. Project Record Documents: Record actual connections and locations of luminaires and any associated remote components.

1.06 QUALITY ASSURANCE

A. Comply with requirements of NFPA 70.

B. Manufacturer Qualifications: Company specializing in manufacturing the products specified in this section with minimum three years documented experience.

C. Product Listing Organization Qualifications: An organization recognized by OSHA as a Nationally Recognized Testing Laboratory (NRTL) and acceptable to authorities having jurisdiction.

1.07 DELIVERY, STORAGE, AND PROTECTION

A. Receive, handle, and store products according to NECA/IESNA 500 (commercial lighting), NECA/IESNA 502 (industrial lighting), and manufacturer's written instructions.

B. Keep products in original manufacturer's packaging and protect from damage until ready for installation.

1.08 FIELD CONDITIONS

A. Maintain field conditions within manufacturer's required service conditions during and after installation.

1.09 WARRANTY

A. See Section 01 7800 - Closeout Submittals, for additional warranty requirements.

B. Provide 3-year manufacturer warranty for LED luminaires, including drivers.

C. Provide 5-year pro-rata warranty for batteries for emergency lighting units.

D. Provide 10-year pro-rata warranty for batteries for self-powered exit signs.

PART 2 PRODUCTS

2.01 LUMINAIRE TYPES

A. Furnish products as indicated in luminaire schedule included on the drawings.

2.02 LUMINAIRES

A. Provide products that comply with requirements of NFPA 70.

B. Provide products that are listed and labeled as complying with UL 1598, where applicable.

C. Provide products listed, classified, and labeled as suitable for the purpose intended.

D. Unless specifically indicated to be excluded, provide all required conduit, boxes, wiring, connectors, hardware, supports, trims, accessories, etc. as necessary for a complete operating system.

E. Provide products suitable to withstand normal handling, installation, and service without any damage, distortion, corrosion, fading, discoloring, etc.

F. Recessed Luminaires:
1. Ceiling Compatibility: Comply with NEMA LE 4.
2. Luminaires Recessed in Insulated Ceilings: Listed and labeled as IC-rated, suitable for direct contact with insulation and combustible materials.
3. Luminaires Recessed in Sloped Ceilings: Provide suitable sloped ceiling adapters.

G. LED Luminaires:
1. Components: UL 8750 recognized or listed as applicable.
2. Tested in accordance with IES LM-79 and IES LM-80.
3. LED Estimated Useful Life: Minimum of 50,000 hours at 70 percent lumen maintenance, calculated based on IES LM-80 test data.

H. LED Tape Lighting Systems: Provide all power supplies, drivers, cables, connectors, channels, covers, mounting accessories, and interfaces as necessary to complete installation.
1. LED Tape - General Requirements:
a. Listed.
b. Designed for field cutting in accordance with listing.
c. Wet Location Applications: IEC 60529, IP 68 (waterproof) rated.

I. Track Lighting Systems: Provide track compatible with specified track heads, with all connectors, power feed fittings, dead ends, hangers and canopies as necessary to complete installation.

J. Luminaires Mounted in Continuous Rows: Provide quantity of units required for length indicated, with all accessories required for joining and aligning.

2.03 EXIT SIGNS

A. Description: Exit signs complying with NFPA 101 and applicable state and local codes, and listed and labeled as complying with UL 924.
1. Number of Faces: Single- or double-face as indicated or as required for installed location.
2. Directional Arrows: As indicated or as required for installed location.

B. Powered Exit Signs: Internally illuminated with LEDs unless otherwise indicated.
1. Self-Powered Exit Signs:
a. Operation: Upon interruption of normal power source or brownout condition exceeding 20 percent voltage drop from nominal, solid-state control automatically switches connected lamps to integral battery power for minimum of 90 minutes of rated emergency illumination, and automatically recharges battery upon restoration of normal power source.
b. Battery: Sealed, maintenance-free, nickel cadmium unless otherwise indicated.
c. Diagnostics: Provide power status indicator light and accessible integral test switch to manually activate emergency operation.
d. Provide low-voltage disconnect to prevent battery damage from deep discharge.
e. Self-Diagnostics: Provide units that self-monitor functionality and automatically perform testing required by NFPA 101; provide indicator light(s) to report test and diagnostic status.

C. Accessories:

1. Provide compatible accessory high-impact polycarbonate vandal shields where indicated.
2. Provide compatible accessory wire guards where indicated.

2.04 BALLASTS AND DRIVERS

A. Ballasts/Drivers - General Requirements:
   1. Electronic Ballasts/Drivers: Inrush currents not exceeding peak currents specified in NEMA 410.

B. Dimmable LED Drivers:
   1. Dimming Range: Continuous dimming from 100 percent to one percent relative light output unless dimming capability to lower level is indicated, without flicker.
   2. Control Compatibility: Fully compatible with the dimming controls to be installed.
      a. Wall Dimmers: See Section 26 2726.
      b. Daylighting Controls: See Section 26 0923.

2.05 ACCESSORIES

A. Stems for Suspended Luminaires: Steel tubing, minimum 1/2" size, factory finished to match luminaire or field-painted as directed.

B. Threaded Rods for Suspended Luminaires: Zinc-plated steel, minimum 1/4" size, field-painted as directed.

C. Fire-Rated Luminaire Enclosures:
   1. Provide as required to preserve fire resistance rating of building elements.

PART 3 EXECUTION

3.01 EXAMINATION

A. Verify that field measurements are as indicated.

B. Verify that outlet boxes are installed in proper locations and at proper mounting heights and are properly sized to accommodate conductors in accordance with NFPA 70.

C. Verify that suitable support frames are installed where required.

D. Verify that branch circuit wiring installation is completed, tested, and ready for connection to luminaires.

E. Verify that conditions are satisfactory for installation prior to starting work.

3.02 PREPARATION

A. Provide extension rings to bring outlet boxes flush with finished surface.

B. Clean dirt, debris, plaster, and other foreign materials from outlet boxes.

3.03 INSTALLATION

A. Coordinate locations of outlet boxes provided under Section 26 0533.16 as required for installation of luminaires provided under this section.

B. Perform work in accordance with NECA 1 (general workmanship).

C. Install products in accordance with manufacturer's instructions.

D. Install luminaires securely, in a neat and workmanlike manner, as specified in NECA 500 (commercial lighting) and NECA 502 (industrial lighting).

E. Provide required support and attachment in accordance with Section 26 0529.

F. Provide required seismic controls in accordance with Section 26 0548.

G. Install luminaires plumb and square and aligned with building lines and with adjacent luminaires.

H. Suspended Ceiling Mounted Luminaires:
   1. Do not use ceiling tiles to bear weight of luminaires.

2. Do not use ceiling support system to bear weight of luminaires unless ceiling support system is certified as suitable to do so.
3. Secure lay-in luminaires to ceiling support channels using listed safety clips at four corners.
4. In addition to ceiling support wires, provide two galvanized steel safety wire(s), minimum 12 gauge, connected from opposing corners of each recessed luminaire to building structure.
5. See appropriate Division 9 section where suspended grid ceiling is specified for additional requirements.

I. Recessed Luminaires:
1. Install trims tight to mounting surface with no visible light leakage.
2. Luminaires Recessed in Fire-Rated Ceilings: Install using accessories and firestopping materials to meet regulatory requirements for fire rating.

J. Suspended Luminaires:
1. Unless otherwise indicated, specified mounting heights are to bottom of luminaire.
2. Install using the suspension method indicated, with support lengths and accessories as required for specified mounting height.
3. Provide minimum of two supports for each luminaire equal to or exceeding 4 feet nominal length, with no more than 4 feet between supports.
4. Install canopies tight to mounting surface.
5. Unless otherwise indicated, support pendants from swivel hangers.

K. Wall-Mounted Luminaires: Unless otherwise indicated, specified mounting heights are to center of luminaire.

L. Install accessories furnished with each luminaire.

M. Bond products and metal accessories to branch circuit equipment grounding conductor.

N. Air Handling Luminaires: Interface with air handling accessories furnished and installed under Section 23 3600.

O. Exit Signs:
1. Unless otherwise indicated, connect unit to unswitched powerfrom same circuit as egress lighting in the same space. Bypass local switches, contactors, or other lighting controls.

P. Identify luminaires connected to emergency power system in accordance with Section 26 0553.

Q. Install lamps in each luminaire.

3.04 FIELD QUALITY CONTROL

A. See Section 01 4000 - Quality Requirements, for additional requirements.

B. Inspect each product for damage and defects.

C. Operate each luminaire after installation and connection to verify proper operation.

D. Test self-powered exit signs and emergency lighting units to verify proper operation upon loss of normal power supply.

E. Correct wiring deficiencies and repair or replace damaged or defective products. Repair or replace excessively noisy ballasts as determined by Architect.

3.05 ADJUSTING

A. Aim and position adjustable luminaires to achieve desired illumination as indicated or as directed by Architect. Secure locking fittings in place.

B. Air-Handling Luminaires with Air Control Blades or Heat Removal Dampers: Adjust as indicated or as required for proper airflow as directed by Architect.

C. Exit Signs with Field-Selectable Directional Arrows: Set as indicated or as required to properly designate egress path as directed by Architect or authority having jurisdiction.

3.06 CLEANING

A. Clean surfaces according to NECA 500 (commercial lighting), NECA 502 (industrial lighting), and manufacturer's instructions to remove dirt, fingerprints, paint, or other foreign material and restore finishes to match original factory finish.

3.07 CLOSEOUT ACTIVITIES

A. Demonstration: Demonstrate proper operation of luminaires to Architect, and correct deficiencies or make adjustments as directed.

3.08 PROTECTION

A. Protect installed luminaires from subsequent construction operations.

END OF SECTION

SECTION 26 5600
EXTERIOR LIGHTING

PART 1 GENERAL

1.01 SECTION INCLUDES

A. Exterior luminaires.

B. Ballasts.

C. Poles and accessories.

D. Luminaire accessories.

1.02 RELATED REQUIREMENTS

A. Section 26 0526 - Grounding and Bonding for Electrical Systems.

B. Section 26 0529 - Hangers and Supports for Electrical Systems.

C. Section 26 0533.16 - Boxes for Electrical Systems.

D. Section 26 0548 - Vibration and Seismic Controls for Electrical Systems.

E. Section 26 2726 - Wiring Devices: Receptacles for installation in poles.

F. Section 26 2813 - Fuses.

G. Section 26 5100 - Interior Lighting.

1.03 REFERENCE STANDARDS

A. AASHTO LTS - Standard Specifications for Structural Supports for Highway Signs, Luminaires and Traffic Signals 2013 (Revised 2019).

B. ANSI C136.10 - American National Standard for Roadway and Area Lighting Equipment - Locking-Type Photocontrol Devices and Mating Receptacles - Physical and Electrical Interchangeability and Testing 2017.

C. IEC 60529 - Degrees of Protection Provided by Enclosures (IP Code) 2013 (Corrigendum 2019).

D. IEEE C2 - National Electrical Safety Code(R) (NESC(R)) 2023.

E. IEEE C62.41.2 - IEEE Recommended Practice on Characterization of Surges in Low-Voltage (1000 V and less) AC Power Circuits 2002 (Corrigendum 2012).

F. IES LM-63 - Approved Method: IES Standard File Format for the Electronic Transfer of Photometric Data and Related Information 2019.

G. IES LM-79 - Approved Method: Optical and Electrical Measurements of Solid-State Lighting Products 2019.

H. IES LM-80 - Approved Method: Measuring Maintenance of Light Output Characteristics of Solid-State Light Sources 2021.

I. NECA 1 - Standard for Good Workmanship in Electrical Construction 2015.

J. NECA/IESNA 501 - Standard for Installing Exterior Lighting Systems 2000 (Reaffirmed 2006).

K. NEMA 410 - Performance Testing for Lighting Controls and Switching Devices with Electronic Drivers and Disharge Ballasts 2020.

L. NEMA LE 4 - Recessed Luminaires, Ceiling Compatibility 2012 (Reaffirmed 2018).

M. NFPA 70 - National Electrical Code Most Recent Edition Adopted by Authority Having Jurisdiction, Including All Applicable Amendments and Supplements.

N. UL 1598 - Luminaires Current Edition, Including All Revisions.

O. UL 8750 - Light Emitting Diode (LED) Equipment for Use in Lighting Products Current Edition, Including All Revisions.

1.04 ADMINISTRATIVE REQUIREMENTS

A. Coordination:
   1. Coordinate placement of poles and associated foundations with utilities, curbs, sidewalks, trees, walls, fences, striping, etc. installed under other sections or by others. Coordinate elevation to obtain specified foundation height.
   2. Notify Architect of any conflicts or deviations from Contract Documents to obtain direction prior to proceeding with work.

1.05 SUBMITTALS

A. Shop Drawings:
   1. Provide photometric calculations where luminaires are proposed for substitution.
   2. Provide structural calculations for each pole.

B. Product Data: Provide manufacturer's standard catalog pages and data sheets including detailed information on luminaire construction, dimensions, ratings, finishes, mounting requirements, listings, service conditions, photometric performance, weight, effective projected area (EPA), and installed accessories; include model number nomenclature clearly marked with all proposed features.
   1. LED Luminaires:
      a. Include estimated useful life, calculated based on IES LM-80 test data.
   2. Poles: Include information on maximum supported effective projected area (EPA) and weight for the design wind speed.

C. Certificates for Poles and Accessories: Manufacturer's documentation that products are suitable for the luminaires to be installed and comply with designated structural design criteria.

D. Project Record Documents: Record actual connections and locations of pole foundations, luminaires, and any pull or junction boxes.

1.06 QUALITY ASSURANCE

A. Comply with requirements of NFPA 70.

B. Manufacturer Qualifications: Company specializing in manufacturing the products specified in this section with minimum three years documented experience.

C. Product Listing Organization Qualifications: An organization recognized by OSHA as a Nationally Recognized Testing Laboratory (NRTL) and acceptable to authorities having jurisdiction.

1.07 DELIVERY, STORAGE, AND HANDLING

A. Receive, handle, and store products according to NECA/IESNA 501 and manufacturer's written instructions.

B. Keep products in original manufacturer's packaging and protect from damage until ready for installation.

1.08 WARRANTY

A. Provide 2-year manufacturer warranty for all LED luminaires, including drivers.

PART 2 PRODUCTS

2.01 LUMINAIRE TYPES

A. Furnish products as indicated in luminaire schedule included on the drawings.

2.02 LUMINAIRES

A. Provide products that comply with requirements of NFPA 70.

B. Provide products that are listed and labeled as complying with UL 1598, where applicable.

C. Provide products listed, classified, and labeled as suitable for the purpose intended.

D. Unless otherwise indicated, provide complete luminaires including lamp(s) and all sockets, ballasts, reflectors, lenses, housings and other components required to position, energize and protect the lamp and distribute the light.

E. Unless specifically indicated to be excluded, provide all required conduit, boxes, wiring, connectors, hardware, poles, foundations, supports, trims, accessories, etc. as necessary for a complete operating system.

F. Provide products suitable to withstand normal handling, installation, and service without any damage, distortion, corrosion, fading, discoloring, etc.

G. Provide luminaires listed and labeled as suitable for wet locations.

H. Recessed Luminaires:
   1. Ceiling Compatibility: Comply with NEMA LE 4.
   2. Luminaires Recessed in Insulated Ceilings: Listed and labeled as IC-rated, suitable for direct contact with insulation and combustible materials.
   3. Luminaires Recessed in Sloped Ceilings: Provide suitable sloped ceiling adapters.

I. Luminaires Mounted in Continuous Rows: Provide quantity of units required for length indicated, with all accessories required for joining and aligning.

J. LED Luminaires:
   1. Components: UL 8750 recognized or listed as applicable.
   2. Tested in accordance with IES LM-79 and IES LM-80.
   3. LED Estimated Useful Life: Minimum of 50,000 hours at 70 percent lumen maintenance, calculated based on IES LM-80 test data.

K. LED Tape Lighting Systems: Provide all power supplies, drivers, cables, connectors, channels, covers, mounting accessories, and interfaces as necessary to complete installation.
   1. LED Tape - General Requirements:
      a. Listed.
      b. Designed for field cutting in accordance with listing.
      c. Wet Location Applications: IEC 60529, IP 68 (waterproof) rated.

L. Exposed Hardware: Stainless steel.

2.03 BALLASTS AND DRIVERS

A. Ballasts/Drivers - General Requirements:
   1. Electronic Ballasts/Drivers: Inrush currents not exceeding peak currents specified in NEMA 410.

2.04 POLES

A. All Poles:
   1. Provide poles and associated support components suitable for the luminaire(s) and associated supports and accessories to be installed.
   2. Structural Design Criteria:
      a. Comply with AASHTO LTS.
      b. Wind Load: Include effective projected area (EPA) of luminaire(s) and associated supports and accessories to be installed.
      c. Dead Load: Include weight of proposed luminaire(s) and associated supports and accessories.
      d. Include structural calculations demonstrating compliance with submittals.
   3. Material: Steel, unless otherwise indicated.
   4. Shape: Square straight, unless otherwise indicated.
   5. Finish: Match luminaire finish, unless otherwise indicated.
   6. Mounting: Install on concrete foundation, height as indicated on the drawings, unless otherwise indicated.

7. Unless otherwise indicated, provide with the following features/accessories:
   a. Top cap.
   b. Handhole.
   c. Anchor bolts with leveling nuts or leveling shims.
   d. Anchor base cover.
   e. Provision for pole-mounted weatherproof GFI receptacle where indicated.
   f. Brackets.
   g. Hinged base.

B. Metal Poles: Provide ground lug, accessible from handhole or transformer base.

2.05 ACCESSORIES

A. Stems for Suspended Luminaires: Steel tubing, minimum 1/2" size, factory finished to match luminaire or field-painted as directed.

B. Threaded Rods for Suspended Luminaires: Zinc-plated steel, minimum 1/4" size, field-painted as directed.

PART 3 EXECUTION

3.01 EXAMINATION

A. Verify that field measurements are as indicated.

B. Verify that outlet boxes are installed in proper locations and at proper mounting heights and are properly sized to accommodate conductors in accordance with NFPA 70.

C. Verify that suitable support frames are installed where required.

D. Verify that branch circuit wiring installation is completed, tested, and ready for connection to luminaires.

E. Verify that conditions are satisfactory for installation prior to starting work.

3.02 PREPARATION

A. Provide extension rings to bring outlet boxes flush with finished surface.

B. Clean dirt, debris, plaster, and other foreign materials from outlet boxes.

3.03 INSTALLATION

A. Coordinate locations of outlet boxes provided under Section 26 0533.16 as required for installation of luminaires provided under this section.

B. Perform work in accordance with NECA 1 (general workmanship).

C. Install products in accordance with manufacturer's instructions.

D. Install luminaires in accordance with NECA/IESNA 501.

E. Provide required support and attachment in accordance with Section 26 0529.

F. Provide required seismic controls in accordance with Section 26 0548.

G. Install luminaires plumb and square and aligned with building lines and with adjacent luminaires.

H. Recessed Luminaires:
   1. Install trims tight to mounting surface with no visible light leakage.
   2. Luminaires Recessed in Fire-Rated Ceilings: Install using accessories and firestopping materials to meet regulatory requirements for fire rating.

I. Suspended Luminaires:
   1. Unless otherwise indicated, specified mounting heights are to bottom of luminaire.
   2. Install using the suspension method indicated, with support lengths and accessories as required for specified mounting height.

3. Provide minimum of two supports for each luminaire equal to or exceeding 4 feet in length, with no more than 4 feet between supports.
4. Install canopies tight to mounting surface.
5. Unless otherwise indicated, support pendants from swivel hangers.

J. Wall-Mounted Luminaires: Unless otherwise indicated, specified mounting heights are to center of luminaire.

K. Pole-Mounted Luminaires:
1. Maintain the following minimum clearances:
   a. Comply with IEEE C2.
   b. Comply with utility company requirements.
2. Foundation-Mounted Poles:
   a. Install foundations plumb.
   b. Install poles plumb, using leveling nuts or shims as required to adjust to plumb.
   c. Tighten anchor bolt nuts to manufacturer's recommended torque.
   d. Install non-shrink grout between pole anchor base and concrete foundation, leaving small channel for condensation drainage.
   e. Install anchor base covers or anchor bolt covers as indicated.
3. Grounding:
   a. Bond luminaires, metal accessories, metal poles, and foundation reinforcement to branch circuit equipment grounding conductor.
4. Install separate service conductors, 12 AWG copper, from each luminaire down to handhole for connection to branch circuit conductors.
5. Install in-line fuse holders and fuses complying with Section 26 2813 in pole handhole for each ungrounded conductor.
6. Install weather resistant GFI duplex receptacle with weatherproof cover as specified in Section 26 2726 in designated poles.

L. Install accessories furnished with each luminaire.

M. Bond products and metal accessories to branch circuit equipment grounding conductor.

N. Install lamps in each luminaire.

3.04 FIELD QUALITY CONTROL

A. Inspect each product for damage and defects.

B. Operate each luminaire after installation and connection to verify proper operation.

C. Correct wiring deficiencies and repair or replace damaged or defective products. Repair or replace excessively noisy ballasts as determined by Architect.

3.05 ADJUSTING

A. Aim and position adjustable luminaires to achieve desired illumination as indicated or as directed by Architect. Secure locking fittings in place.

B. Luminaires with Field-Rotatable Optics: Position optics according to manufacturer's instructions to achieve lighting distribution as indicated or as directed by Architect.

3.06 CLEANING

A. Clean surfaces according to NECA/IESNA 501 and manufacturer's instructions to remove dirt, fingerprints, paint, or other foreign material and restore finishes to match original factory finish.

3.07 PROTECTION

A. Protect installed luminaires from subsequent construction operations.

END OF SECTION

SECTION 28 4600
FIRE DETECTION AND ALARM

PART 1 GENERAL

1.01 SECTION INCLUDES

A. Fire alarm system design and installation, including all components, wiring, and conduit.

B. Transmitters for communication with supervising station.

C. Replacement and removal of existing fire alarm system components, wiring, and conduit indicated.

1.02 REFERENCE STANDARDS

A. 36 CFR 1191 - Americans with Disabilities Act (ADA) Accessibility Guidelines for Buildings and Facilities; Architectural Barriers Act (ABA) Accessibility Guidelines current edition.

B. ADA Standards - 2010 ADA Standards for Accessible Design 2010.

C. IEEE C62.41.2 - IEEE Recommended Practice on Characterization of Surges in Low-Voltage (1000 V and less) AC Power Circuits 2002 (Corrigendum 2012).

D. NFPA 70 - National Electrical Code Most Recent Edition Adopted by Authority Having Jurisdiction, Including All Applicable Amendments and Supplements.

E. NFPA 72 - National Fire Alarm and Signaling Code Most Recent Edition Cited by Referring Code or Reference Standard.

1.03 SUBMITTALS

A. See Section 01 3000 - Administrative Requirements, for submittal procedures.

B. Evidence of designer qualifications.

C. Design Documents: Submit all information required for plan review and permitting by authorities having jurisdiction, including but not limited to floor plans, riser diagrams, and description of operation:
   1. Copy (if any) of list of data required by authority having jurisdiction.
   2. NFPA 72 "Record of Completion", filled out to the extent known at the time.
   3. Clear and concise description of operation, with input/output matrix similar to that shown in NFPA 72 Appendix A-7-5-2.2(9), and complete listing of software required.
   4. System zone boundaries and interfaces to fire safety systems.
   5. Location of all components, circuits, and raceways; mark components with identifiers used in control unit programming.
   6. Circuit layouts; number, size, and type of raceways and conductors; conduit fill calculations; spare capacity calculations; notification appliance circuit voltage drop calculations.
   7. List of all devices on each signaling line circuit, with spare capacity indicated.
   8. Manufacturer's detailed data sheet for each component, including wiring diagrams, installation instructions, and circuit length limitations.
   9. Description of power supplies; if secondary power is by battery include calculations demonstrating adequate battery power.
   10. Certification by either the manufacturer of the control unit or by the manufacturer of each other component that the components are compatible with the control unit.
   11. Certification by the manufacturer of the control unit that the system design complies with Contract Documents.
   12. Certification by Contractor that the system design complies with Contract Documents.
   13. Do not show existing components to be removed.

D. Evidence of installer qualifications.

E. Inspection and Test Reports:
   1. Submit inspection and test plan prior to closeout demonstration.

2. Submit documentation of satisfactory inspections and tests.
3. Submit NFPA 72 "Inspection and Test Form," filled out.

F. Operating and Maintenance Data: See Section 01 7800 for additional requirements; revise and resubmit until acceptable; have one set available during closeout demonstration:
1. Complete set of specified design documents, as approved by authority having jurisdiction.
2. Additional printed set of project record documents and closeout documents, bound or filed in same manuals.
3. Contact information for firm that will be providing contract maintenance and trouble call-back service.
4. List of recommended spare parts, tools, and instruments for testing.
5. Replacement parts list with current prices, and source of supply.
6. Detailed troubleshooting guide and large scale input/output matrix.
7. Preventive maintenance, inspection, and testing schedule complying with NFPA 72; provide printed copy and computer format acceptable to Owner.
8. Detailed but easy to read explanation of procedures to be taken by non-technical administrative personnel in the event of system trouble, when routine testing is being conducted, for fire drills, and when entering into contracts for remodeling.

G. Project Record Documents: See Section 01 7800 for additional requirements; have one set available during closeout demonstration:
1. Complete set of floor plans showing actual installed locations of components, conduit, and zones.
2. "As installed" wiring and schematic diagrams, with final terminal identifications.
3. "As programmed" operating sequences, including control events by device, updated input/output chart, and voice messages by event.

H. Closeout Documents:
1. Certification by manufacturer that the system has been installed in compliance with manufacturer's installation requirements, is complete, and is in satisfactory operating condition.
2. NFPA 72 "Record of Completion", filled out completely and signed by installer and authorized representative of authority having jurisdiction.

1.04 QUALITY ASSURANCE

A. Designer Qualifications: NICET Level III or IV (3 or 4) certified fire alarm technician or registered fire protection engineer, employed by fire alarm control panel manufacturer, Contractor, or installer , with experience designing fire alarm systems in the jurisdictional area of the authorities having jurisdiction.

B. Installer Qualifications: Firm with minimum 3 years documented experience installing fire alarm systems of the specified type and providing contract maintenance service as a regular part of their business.
1. Authorized representative of control unit manufacturer; submit manufacturer's certification that installer is authorized; include name and title of manufacturer's representative making certification.
2. Installer Personnel: At least 2 years of experience installing fire alarm systems.
3. Supervisor: NICET level III or IV (3 or 4) certified fire alarm technician; furnish name and address.

PART 2 PRODUCTS

2.01 FIRE ALARM SYSTEM

A. Fire Alarm System: Provide modifications and extensions to the existing automatic fire detection and alarm system:
1. Provide all components necessary, regardless of whether shown in Contract Documents or not.
2. Protected Premises: Entire building shown on drawings.
3. Comply with the following; where requirements conflict, order of precedence of requirements is as listed:

a. ADA Standards.
b. The requirements of the local authority having jurisdiction.
c. Applicable local codes.
d. Contract Documents (drawings and specifications).
e. NFPA 72; where the word "should" is used consider that provision mandatory; where conflicts between requirements require deviation from NFPA 72, identify deviations clearly on design documents.

4. Evacuation Alarm: Multiple smoke zones; allow for evacuation notification of any individual zone or combination of zones, in addition to general evacuation of entire premises.
5. Voice Notification: Provide emergency voice/alarm communications with multichannel capability; digital.
6. General Evacuation Zones: Each smoke zone is considered a general evacuation zone unless otherwise indicated, with alarm notification in all zones on the same floor, on the floor above, and the floor below.
7. Program notification zones and voice messages as directed by Owner.
8. Fire Alarm Control Unit: New, located at fire command center.

B. Supervising Stations and Fire Department Connections:
1. Public Fire Department Notification: By on-premises supervising station.
2. On-Premises Supervising Station: Existing proprietary station operated by Owner.
3. Means of Transmission to On-Premises Supervising Station: Directly connected noncoded system.

C. Circuits:
1. Initiating Device Circuits (IDC): Class B, Style A.
2. Signaling Line Circuits (SLC) Within Single Building: Class B, Style 0.5.
3. Notification Appliance Circuits (NAC): Class B, Style W.

D. Power Sources:
1. Primary: Dedicated branch circuits of the facility power distribution system.
2. Secondary: Storage batteries.
3. Capacity: Sufficient to operate entire system for period specified by NFPA 72.
4. Each Computer System: Provide uninterruptible power supply (UPS).

2.02 EXISTING COMPONENTS

A. On-Premises Supervising Station: Include as part of this work all modifications necessary to existing supervising station to accommodate new fire alarm work.

B. Clearly label components that are "Not In Service."

C. Remove unused existing components and materials from site and dispose of properly.

2.03 FIRE SAFETY SYSTEMS INTERFACES

A. Supervision: Provide supervisory signals in accordance with NFPA 72 for the following:
1. Sprinkler water control valves.
2. Dry-pipe sprinkler system pressure.
3. Dry-pipe sprinkler valve room low temperature.

B. Alarm: Provide alarm initiation in accordance with NFPA 72 for the following:
1. Sprinkler water flow.

C. HVAC:
1. Duct Smoke Detectors: Close dampers indicated; shut down air handlers indicated.

2.04 COMPONENTS

A. General:

1. Provide flush mounted units where installed in finish areas; in unfinished areas, surface mounted unit are acceptable.
2. Provide legible, permanent labels for each control device, using identification used in operation and maintenance data.

B. Fire Alarm Control Units: Analog, addressable type; listed, classified, and labeled as suitable for the purpose intended.

C. Addressable Modules:
1. Provide addressable modules suitable for connection to fire alarm control unit signaling line circuits.
2. Unless otherwise indicated, use addressable modules only in clean, dry, indoor, nonhazardous locations.

D. Initiating Devices:
1. Addressable Systems:
a. Addressable Devices: Individually identifiable by addressable fire alarm control unit.
b. Provide suitable addressable interface modules as indicated or as required for connection to conventional (non-addressable) devices and other components that provide a dry closure output.

E. Circuit Conductors: Copper or optical fiber; provide 200 feet extra; color code and label.

F. Surge Protection: In accordance with IEEE C62.41.2 category B combination waveform and NFPA 70; except for optical fiber conductors.

G. Locks and Keys: Deliver keys to Owner.

H. Instruction Charts: Printed instruction chart for operators, showing steps to be taken when a signal is received (normal, alarm, supervisory, and trouble); easily readable from normal operator's station.
1. Frame: Stainless steel or aluminum with polycarbonate or glass cover.
2. Provide one for each control unit where operations are to be performed.
3. Obtain approval of Owner prior to mounting; mount in location acceptable to Owner.
4. Provide extra copy with operation and maintenance data submittal.

PART 3 EXECUTION

3.01 INSTALLATION

A. Install in accordance with applicable codes, NFPA 72, NFPA 70, and Contract Documents.

B. Conceal all wiring, conduit, boxes, and supports where installed in finished areas.

C. Obtain Owner's approval of locations of devices, before installation.

D. Install instruction cards and labels.

3.02 INSPECTION AND TESTING FOR COMPLETION

A. Notify Owner 7 days prior to beginning completion inspections and tests.

B. Notify authorities having jurisdiction and comply with their requirements for scheduling inspections and tests and for observation by their personnel.

C. Provide the services of the installer's supervisor or person with equivalent qualifications to supervise inspection and testing, correction, and adjustments.

D. Prepare for testing by ensuring that all work is complete and correct; perform preliminary tests as required.

E. Provide all tools, software, and supplies required to accomplish inspection and testing.

F. Perform inspection and testing in accordance with NFPA 72 and requirements of local authorities; document each inspection and test.

G. Correct defective work, adjust for proper operation, and retest until entire system complies with Contract Documents.

3.03 CLOSEOUT

A. Closeout Demonstration: Demonstrate proper operation of all functions to Owner.
   1. Be prepared to conduct any of the required tests.
   2. Have at least one copy of operation and maintenance data, preliminary copy of project record drawings, input/output matrix, and operator instruction chart(s) available during demonstration.
   3. Have authorized technical representative of control unit manufacturer present during demonstration.
   4. Demonstration may be combined with inspection and testing required by authority having jurisdiction; notify authority having jurisdiction in time to schedule demonstration.
   5. Repeat demonstration until successful.

END OF SECTION

PART 1 GENERAL

1.01 SUMMARY

SCOPE OF WORK

This work shall include the furnishing of all labor, materials, equipment, forms and other appurtenances necessary to construct the concrete work as called for by the utility line drawings.

CONCRETE

Fixed Ratios: The concrete shall be proportioned as shown on the drawings by dry volumes.

For each 150 cubic yard of concrete, 4 cylinders shall be made and stored in accordance with ASTM C-33, of which one (1) shall be broken at 7 days and three (3) at 28 days.

CEMENT

All cement shall be Portland and shall conform to ASTM C-150, Type 1, and shall be tested by a laboratory selected by the Engineer if required by the owner.

SAND

Sand shall be capable of developing 90% of the tensile strength of standard Ottawa sand. If required, samples shall be submitted for the Engineer's approval and for testing.

Sand shall not contain more than 1 ½ % clay. Sand shall not show darker than a very light amber when tested by the calorimetric method.

The size of the sand shall be such that not less than 85% shall pass through an 1/4 inch sieve, not more than 30% through a 50-mesh sieve, and not more than 5% through a 100-mesh sieve.

STONE OR GRAVEL

Aggregate shall be composed of hard durable rock or gravel, free from shale or decomposed pieces. It shall be un-coated and clean. If required, samples shall be submitted to the Engineer for approval.

For reinforced work, aggregate shall be uniformly graded between a 1-inch and No. 4 sieve. For mass masonry, it may be graded to a 3-inch sieve. Bank or crushed run will not be permitted.

WATER

Water shall be clean and free from oils, acids, salts, or other injurious substances.

REINFORCING STEEL

Reinforcing steel shall be new billet stock of intermediate grade and shall conform to ASTM A-15. If required, the Contractor shall furnish the Engineer with a certificate from the manufacturer stating that the product is open-hearth steel and giving those chemical and physical properties of the heat required by ASTM A-15. Bars shall be deformed to conform to ASTM A-305.

Bars shall be free from scale, oil, and structural defects, and shall be kept so on the job. The system of holding bars in place must insure that all steel in the top surface will support the weight of the workmen without displacement. All chairs, wiring, nails, and other devices for positioning reinforcement shall be galvanized.

All reinforcing steel within the limits of a day's pour shall be in place and firmly wired before concreting starts.

Placing or wiring steel less than 6 hours before concreting starts shall not be permitted.

On exterior exposed work, no ties or spacers shall be permitted to remain within 1 ½ inches of the finished surfaces.

MIXING

The mix shall be kept as dry as possible to work.

Sand and stone shall be measured in gated hoppers.

A standard type of batch mixer shall be used.

Air-slaked cement or cement which is lumpy, whatever the cause, shall not be used.

The mixing time shall be not less than 1 ½ minute.

PLACING OF CONCRETE

Forms, if required, shall be clean. Concrete shall be deposited without segregation.

Bars shall be shaken to insure bond with concrete.

The concrete shall be thoroughly spaded or vibrated to insure contact with the steel and forms.

The slump of the concrete shall be the minimum that is practical. When vibrators are used to consolidate concrete, the slump shall not exceed 4 inches

FORMS AND CENTERING

The Contractor shall furnish forms that result in correctly aligned concrete. The following are suggestions to that end:

The centering shall be true and rigid, thoroughly braced both horizontally and diagonally, sufficiently strong to carry the dead weight of the construction, as liquid, without defection, and tight enough to prevent leakage of mortar.

The forms shall not be removed until the concrete is adequately set.

When the forms are removed, the Contractor shall place adequate re-shores to prevent injury to the concrete by construction loads. The responsibility for safe practice in this regard shall be the Contractor's.

BUILT-IN FIXTURES, BOLTS, SLEEVES, INSERTS

The Contractor shall furnish and install all bolts, pipe sleeves, inserts, and other fixtures as shown on the drawings, which are not furnished, set, or formed by other trades.

FROST PROTECTION

The aggregate shall be free from frozen lumps or snow.

The concrete shall be kept at a temperature of 70°F for 72 hours after pouring.

The Contractor shall submit for the Engineer's approval, the methods he intends to use to carry out the above requirements.

No admixtures to prevent freezing will be permitted.

READY MIXED CONCRETE

Ready-mixed concrete may be used provided that the concrete produced conforms to these specifications and that the equipment and methods conform to ASTM C-94.

FIELD TESTS

The cylinders for above laboratory tests shall be made, stored, and shipped.

Slump tests shall be conducted continuously during concreting operations if required by the Engineer.

BASIS OF PAYMENT

The work under this section shall be paid for as other items in this contract. The price shall be full compensation for furnishing all materials, equipment, labor and incidentals to complete this work as specified.

---------- **END OF SECTION** ----------

----------THIS PAGE LEFT INTENTIONALLY BLANK----------

PART 1 GENERAL

1.01 SUMMARY

A. Section Includes:
1. Removal and storage of topsoil.
2. Rough grading site for site structures and building pads.
3. Finish grading.

B. Related Documents:
1. The Contract Documents, as defined in the EJCDC C-700 Standard General Conditions of the Construction Contract, apply to the Work of this Section. Additional requirements and information necessary to complete the Work of this Section may be found in other documents.

C. Related Sections:
1. Section 31 1000 - Site Clearing: Removal of site debris.
2. Section 31 2316 - Excavation: Excavation for building, footings and utilities within building.
3. Section 31 2324 - Fill and Backfill: Filling and compaction.
4. Section 31 2333 - Trenching for Site Utilities: Trenching and backfilling for utilities outside of building.

1.02 REFERENCES

A. American Society for Testing and Materials (ASTM):
1. ASTM D 2922 - Standard Test Methods for Density of Soil and Soil-Aggregate in Place by Nuclear Methods (Shallow Depth).

1.03 SUBMITTALS

A. Section 01 7800 - Closeout Submittals: Requirements for closeout submittals.

B. Project Record Documents: Accurately record actual locations of utilities remaining by horizontal dimensions, elevations or inverts, and slope gradients.

1.04 QUALITY ASSURANCE

A. Perform Work in accordance with local authority having jurisdiction standards.

1.05 PROJECT CONDITIONS

A. Protect above- and below-grade utilities that remain.

B. Protect plants, lawns, plants, and other features to remain as a portion of final landscaping.

C. Protect bench marks, survey control points, existing structures, fences, sidewalks, paving, and curbs from excavating equipment and vehicular traffic.

PART 2 PRODUCTS

2.01 MATERIALS

A. Topsoil:
   1. Excavated On-Site:
      a. Graded.
      b. Free of roots, rocks larger than 1/2 inch, subsoil, debris, large weeds and foreign material.
   2. Imported Borrow:
      a. Friable loam.
      b. Free of roots, rocks larger than 1/2 inch, subsoil, debris, large weeds and foreign material.
      c. Acidity range (pH): 5.0 to 7.0.
      d. Inorganic Matter: Minimum 6 percent and maximum 25 percent.

B. Other Fill Materials: Specified in Section 31 2324.

PART 3 EXECUTION

3.01 EXAMINATION

A. Section 01 7300 - Execution Requirements: Verification of existing conditions before starting work.

B. Verification of Conditions: Verify that field measurements, surfaces, substrates and conditions are as required, and ready to receive Work.
   1. Verify that survey bench mark and intended elevations for the Work are as indicated.

C. Report in writing to Architect prevailing conditions that will adversely affect satisfactory execution of the Work of this Section. Do not proceed with Work until unsatisfactory conditions have been corrected.

D. By beginning Work, Contractor accepts conditions and assumes responsibility for correcting unsuitable conditions encountered at no additional cost to the Owner.

3.02 PREPARATION

A. Identify required lines, levels, contours, and datum.

B. Stake and flag locations of known utilities before starting any grading or excavating work.
   1. Contact Oklahoma One Call System at (800) 522-6543 for utility company location of existing lines on or adjacent to Project site.

C. Locate, identify, and protect utilities that remain, from damage.

3.03 ROUGH GRADING

A. Remove topsoil from areas to be further excavated, re-landscaped, or re-graded, without mixing with foreign materials.

B. Do not remove topsoil when wet.

C. Remove subsoil from areas to be further excavated, re-landscaped, or re-graded.

D. Do not remove wet subsoil, unless it is subsequently processed to obtain optimum moisture content.

E. When excavating through roots, perform work by hand and cut roots with sharp axe.

F. Refer to Section 31 2324 for filling procedures.

G. Stability: Replace damaged or displaced subsoil to same requirements as for specified fill.

3.04 SOIL REMOVAL AND STOCKPILING

A. Stockpile excavated topsoil on site.

B. Stockpile excavated subsoil on site.

C. Stockpiles: Use areas designated on site; pile depth not to exceed 8 feet; protect from erosion.

3.05 FINISH GRADING

A. Before Finish Grading:
   1. Verify building and trench backfilling have been inspected.
   2. Verify subgrade has been contoured and compacted.

B. Remove debris, roots, branches, stones, in excess of 1/2 inch in size. Remove soil contaminated with petroleum products.

C. Where topsoil is to be placed, scarify surface to depth of 3 inches.

D. In areas where vehicles or equipment have compacted soil, scarify surface to depth of 3 inches.

E. Place topsoil in areas where sodding is indicated.

F. Place topsoil where required to level finish grade.

G. Place topsoil to nominal depth of 4 inches.

H. Place topsoil during dry weather.

I. Remove roots, weeds, rocks, and foreign material while spreading.

J. Near plants spread topsoil manually to prevent damage.

K. Fine grade topsoil to eliminate uneven areas and low spots. Maintain profiles and contour of subgrade.

L. Slope finish grade of topsoil away from building minimum 2 inches in 10 feet, unless noted otherwise. Make gradual grade changes. Blend slope slope into level areas.

M. Lightly compact placed topsoil.

3.06 COMPACTING

A. Compacting for building area subgrade pad specified in Section 02 316.

B. Compact soil to the minimum percentage density in accordance with ASTM D 2922 for the following areas:
   1. Pavements and Sidewalks: Compact the top 8 inches of subgrade to 95 percent optimum density with moisture content between 1 percent below and 2 percent above optimum moisture content.
   2. Sodded and Unpaved Areas: Compact the top 8 inches of subgrade to 90 percent optimum density.

3.07 TOLERANCES

A. Top Surface of Subgrade: Plus or minus 1/10 foot from required elevation.

B. Top Surface of Finish Grade: Plus or minus 1/2 inch.

3.08 FIELD QUALITY CONTROL

A. Section 01 4500 - Quality Control: Contractor Quality Control Representative shall perform contractor field quality control inspections.
   1. Inspect grading operations, compaction, rough and finish grading.
   2. Document preparatory, initial and follow-up inspection in Contractor Test and Inspection Reports and submit to Architect.

B. Section 01 4500 - Testing Laboratory Services: Refer to Section 02 316 for compaction density testing.

C. Correct deficiencies in products and installation found not to be in compliance with Contract Documents.

3.09 CLEANING AND PROTECTION

A. Remove unused stockpiled topsoil and subsoil. Grade stockpile area to prevent standing water.

B. Leave site clean and raked, ready to receive sodding.

---------- END OF SECTION ----------

----------THIS PAGE LEFT INTENTIONALLY BLANK----------

PART 1 GENERAL

1.01 SUMMARY

A. Section Includes:
1. Filling, backfilling, and compacting for building below grade, footings, slabs-on-grade and site structures.
2. Building Area Subgrade Pad preparation.

B. Related Documents:
1. The Contract Documents, as defined in the EJCDC – C700 Standard General Conditions of the Construction Contract, apply to the Work of this Section. Additional requirements and information necessary to complete the Work of this Section may be found in other documents.
2. Geotechnical Report: Geotechnical Engineer observations and recommendations.

C. Related Sections:
1. Section 01 4523- Testing Laboratory Services: Testing requirements.
2. Section 01 4525 - Geotechnical Engineer Inspection Services: Geotechnical Engineer inspections.
3. Section 31 2200 - Grading: Rough grading.
4. Section 31 2316 - Excavation: Excavating for rough grading.
5. Section 31 2314 - Building Area Subgrade Pad Preparation: Building pad preparation requirements and procedures.
6. Section 31 2333 - Trenching for Site Utilities: Trenching for utilities outside the building.
7. Section 32 1216 - Asphalt Concrete Pavement: Asphalt pavement and base.
8. Section 32 1313– Portland Cement Concrete Pavement: Concrete Pavement and Base.

1.02 REFERENCES

A. American Society for Testing and Materials (ASTM):
1. ASTM C 33 - Standard Specification for Concrete Aggregates.
2. ASTM D 698 - Test Method for Laboratory Compaction Characteristics of Soil Using Standard Effort (12,400 ft-lbf/ft3 (600 kN-m/m3)).
3. ASTM D 2487 - Standard Classification of Soils for Engineering Purposes (Unified Soil Classification System).
4. ASTM D 2922 - Standard Test Methods for Density of Soil and Soil-Aggregate in Place by Nuclear Methods (Shallow Depth).

1.03 SUBMITTALS

A. Section 01 3300 - Submittal Procedures: Requirements for submittals.

B. Assurance/Control Submittals:
   1. Test and Inspection Reports: Submit the following test and inspection reports in conformance with Section 01 4523.
      a. Compaction density testing and evaluations.
   2. Qualification Documentation: Submit documentation of experience indicating compliance with specified qualification requirements.

1.04 QUALITY ASSURANCE

A. Backfill Placement Qualifications: Company specializing in the Work of this Section with minimum 5 years documented experience.

1.05 PROJECT CONDITIONS

A. Provide sufficient quantities of fill to meet project schedule and requirements. When necessary, store materials on site in advance of need.

B. When fill materials need to be stored on site, locate stockpiles where indicated.
   1. Separate differing materials with dividers or stockpile separately to prevent intermixing.
   2. Prevent contamination.
   3. Protect stockpiles from erosion and deterioration of materials.

C. Verify that survey bench marks and intended elevations for the Work are as indicated.

PART 2 PRODUCTS

2.01 FILL MATERIALS

A. General Fill: Subsoil excavated on-site.
   1. Free of lumps larger than 3 inches, rocks larger than 2 inches, and debris.
   2. Conforming to ASTM D 2487, Group Symbol GW, GM, GC, SW, SP, SM, CL and ML.

B. Structural Fill: Inspected and approved by Independent Testing Laboratory.
   1. Low volume change cohesive soil with liquid limit less than 35 , a plasticity index between 9 and 13 .
   2. Graded, containing at least 15 percent fines (material passing the No. 200 sieve, based on dry weight).
   3. Free of lumps larger than 3 inches, rocks larger than 2 inches, and debris.
   4. Sandy Clays conforming to ASTM D 2487, Group Symbol SC or Clayey Sands conforming to ASTM D 2487, Group Symbol CL.

      a. Gravel, free of sharp corners or edges, natural stone; washed, free of clay, shale, organic matter; 1/4 inch minimum size, 5/8 inch maximum size.

C. Aggregate Fill: Clean crushed concrete aggregate conforming to ASTM C 33.

D. Limestone Screening Fill: Inspected and approved by Independent Testing Laboratory.
   1. Non-expansive with plasticity index less than 12.

E. Concrete for Fill: As specified in Section 033000; compressive strength of 3000 psi.

PART 3 EXECUTION

3.01 EXAMINATION

A. Section 01 7300 - Execution Requirements: Verification of existing conditions before starting work.

B. Verification of Conditions: Verify that field measurements, surfaces, substrates and conditions are as required, and ready to receive Work.
   1. Identify required lines, levels, contours, and datum locations.
   2. See Section 31 2200 for additional requirements.
   3. Determine actual groundwater levels at start of earthwork operations.

C. Report in writing to Architect prevailing conditions that will adversely affect satisfactory execution of the Work of this Section. Do not proceed with Work until unsatisfactory conditions have been corrected.

D. By beginning Work, Contractor accepts conditions and assumes responsibility for correcting unsuitable conditions encountered at no additional cost to the Owner.

3.02 PREPARATION

A. Prior to placement of fill in Building Area, Geotechnical Engineer-of-Record to inspect and Independent Testing Agency to evaluate moisture content of exposed soils and make recommendations.

B. Proof roll exposed subgrade with moderately loaded dump truck.

C. Cut out soft areas of subgrade not capable of compaction in place. Backfill with structural fill.

D. Scarify subgrade surface to a depth of 6 inches to identify soft spots.

E. Compact subgrade to density equal to or greater than requirements for subsequent fill material.

F. Until ready to fill, maintain excavations and prevent loose soil from falling into excavation.

3.03 FILLING

A. Fill up to subgrade elevations unless otherwise indicated.

B. Employ a placement method that does not disturb or damage other work.

C. Systematically fill to allow maximum time for natural settlement. Do not fill over porous, wet, frozen or spongy subgrade surfaces.

D. Maintain optimum moisture content of fill materials to attain required compaction density.

E. General Fill: Place and compact material in equal continuous layers not exceeding 9 inches of loose material.

F. Slope grade away from building minimum 2 inches in 10 feet, unless noted otherwise. Make gradual grade changes. Blend slope into level areas.

G. Correct areas that are over-excavated.
   1. Load-Bearing Foundation Surfaces: Use structural fill, flush to required elevation and compaction.
   2. Other areas: Use general fill, flush to required elevation, compacted to minimum 95 percent of maximum dry density and moisture 2 percent above optimum moisture content.

H. Compaction Density Unless Otherwise Specified or Indicated:
   1. Under concrete paving, site concrete slabs-on-grade, and similar construction: 95 percent of maximum dry density and moisture content 3 percent above optimum moisture content.
   2. Compact using a vibratory sheeps foot having a minimum drum size of 60 inches.

I. Compaction Density for Utility Trenches within Building Area Subgrade Pad Area:
   1. 95 percent of maximum dry density and moisture content 3 percent above optimum moisture content.
   2. Compact using a vibratory sheeps foot having a minimum drum size of 60 inches.

3.04 FIELD QUALITY CONTROL

A. Section 01 4500 - Quality Control: Contractor Quality Control Representative shall perform contractor quality control inspections.
   1. Inspect fill placement operations and compaction.
   2. Document preparatory, initial and follow-up inspection in Contractor Test and Inspection Reports and submit to Architect.

B. Section 01 4525 - Geotechnical Engineer Inspection Services: Perform geotechnical inspections.
   1. Inspection of areas exposed by excavation that will receive structural fill.
   2. Inspection of structural fill placement.

C. Section 01 4500 - Testing Laboratory Services: Perform the following tests and inspections.
   1. Inspection and approval of structural fill material.

2. Determine actual groundwater levels at start of earthwork operations.
3. Perform compaction density testing on compacted fill in accordance with ASTM D 2922.
4. Evaluate results in relation to compaction curve determined by testing uncompacted material in accordance with ASTM D 698 (Standard Proctor).
5. If tests indicate work does not meet specified requirements, remove work, replace and retest.
6. Frequency of Tests:
    a. For structural fill areas at Building Area Subgrade Pad: 1 per every lift of fill per 2500 square feet, minimum 2 tests.
    b. For structural fill areas at Paved Areas: 1 per every lift of fill per 5000 square feet, minimum 2 tests.

D. Correct deficiencies in products and installation found not to be in compliance with Contract Documents.

3.05 CLEAN-UP

A. Remove unused stockpiled materials, leave area in a clean and neat condition. Grade stockpile area to prevent standing surface water.

---------- **END OF SECTION** ----------

----------THIS PAGE LEFT INTENTIONALLY BLANK----------

DIVISION 31 - EARTHWORK
TRENCHING FOR SITE UTILITIES SECTION 31 23 33

PART 1 GENERAL

1.01 SUMMARY

A. Section Includes:
   1. Backfilling and compacting for utilities outside the building to utility main connections.

B. Related Documents:
   1. The Contract Documents, as defined in the EJCDC C-700 Standard General Conditions of the Construction Contract, apply to the Work of this Section. Additional requirements and information necessary to complete the Work of this Section may be found in other documents.

C. Related Sections:
   1. Section 01 4500 - Testing Laboratory Services: Compaction testing.
   2. Section 31 2200 - Grading: Site grading.
   3. Section 31 2316 - Excavation: Building and foundation excavating.
   4. Section 31 2324 Fill and Backfill: Filling and backfilling

1.02 REFERENCES

A. American Society for Testing and Materials (ASTM):
   1. ASTM D 698 - Test Method for Laboratory Compaction Characteristics of Soil Using Standard Effort (12,400 ft-lbf/ft3 (600 kN-m/m3)).
   2. ASTM D 2922 - Standard Test Methods for Density of Soil and Soil-Aggregate in Place by Nuclear Methods (Shallow Depth).

1.03 DEFINITIONS

A. Finish Grade Elevations: Indicated on Drawings.

1.04 QUALITY ASSURANCE

A. Regulatory Requirements:
   1. Provide protection for workers within trench areas in accordance with local, state and federal Occupational Safety and Health requirements and regulations.

1.05 PROJECT CONDITIONS

A. Provide sufficient quantities of fill to meet project schedule and requirements. When necessary, store materials on site in advance of need.

B. Verify that survey bench marks and intended elevations for the Work are as indicated.

C. Protect bench marks, survey control points, existing structures, fences, sidewalks, paving, and curbs from excavating equipment and vehicular traffic.

PART 2 PRODUCTS

2.01 FILL MATERIALS

A. Fill: Specified in Section 31 2324.

2.02 TRACE TAPE

A. Detectable tape, 3 inch wide with aluminum foil core encased in polyethylene plastic jacket with large letters permanently marked.

B. Color and markings as required by the American Public Works Association as follows, unless otherwise required by local authority having jurisdiction.
   1. Red: Electrical lines; mark “CAUTION ELECTRIC SERVICE.”
   2. Yellow: Gas lines; mark “CAUTION GAS SERVICE.”
   3. Blue: Water lines; mark “CAUTION WATER SERVICE.”
   4. Green: Sewer or storm drain lines; mark “CAUTION SEWER SERVICE.”
   5. Orange: Telephone, television or communications lines; mark “CAUTION TELEPHONE SERVICE.”

PART 3 EXECUTION

3.01 EXAMINATION

A. Section 01 7300 - Execution Requirements: Verification of existing conditions before starting work.

B. Verification of Conditions: Verify that field measurements, surfaces, substrates and conditions are as required, and ready to receive Work.
   1. Identify required lines, levels, contours, and datum locations.
   2. Refer to Section 31 2200 for additional requirements.

C. Report in writing to Architect prevailing conditions that will adversely affect satisfactory execution of the Work of this Section. Do not proceed with Work until unsatisfactory conditions have been corrected.

D. By beginning Work, Contractor accepts conditions and assumes responsibility for correcting unsuitable conditions encountered at no additional cost to the Owner.

3.02 PREPARATION

A. Identify required lines, levels, contours, and datum locations.

B. Stake and flag locations of known utilities before starting any excavating work.
   1. Contact Oklahoma One Call System at (800) 522-6543 for utility company location of existing lines on or adjacent to Project site.

2. Protect utility lines from damage.

C. Refer to Section 31 2200 for additional requirements.

3.03 TRENCHING

A. Notify Architect and Owner's Representative of unexpected subsurface conditions and discontinue affected Work in area until notified to resume work.

B. Slope banks of excavations deeper than 4 feet to angle of repose or less until shored.

C. Do not interfere with 45 degree bearing splay of foundations.

D. Cut trenches as indicated on Drawings and wide enough to allow inspection of installed utilities.

E. Hand trim excavations. Remove loose matter.

F. Remove large stones and other hard material which could damage piping or impede consistent backfilling or compaction.

G. Remove excavated material that is unsuitable for re-use from site.

H. Stockpile excavated material to be re-used in area designated on site in accordance with Section 31 2200.

I. Remove excess excavated material from site.

J. Refer to Division 15 and 16.

3.04 PREPARATION FOR UTILITY PLACEMENT

A. Cut out soft areas of subgrade not capable of compaction in place.

B. Compact subgrade to density equal to or greater than requirements for subsequent fill material.

C. Until ready to backfill, maintain excavations and prevent loose soil from falling into excavation.

3.05 BACKFILL

A. Backfill to contours and elevations indicated using unfrozen materials.

B. Employ a placement method that does not disturb or damage other work.

C. Systematically fill to allow maximum time for natural settlement. Do not fill over porous, wet, frozen or spongy subgrade surfaces.

D. Maintain optimum moisture content of fill materials to attain required compaction density.

E. Gravel: Place and compact materials in equal continuous layers not exceeding 6 inches loose material.

F. Fill: Place and compact material in equal continuous layers not exceeding 9 inches loose materials.

G. Slope grade away from building minimum 2 inches in 10 feet, unless noted otherwise. Make gradual grade changes. Blend slope into level areas.

H. Correct areas that are over-excavated.
   1. Thrust bearing surfaces: Fill with concrete.
   2. Other areas: Use general fill, flush to required elevation, compacted to minimum 95 percent of maximum dry density.

I. Compaction Density Unless Otherwise Specified or Indicated: 95 percent of maximum dry density and moisture content between 2 percent below and 2 percent above the optimum moisture content.

J. Reshape and re-compact fills subjected to vehicular traffic.

K. Install continuous trace tape 6 inches above top of pipe.

L. Refer to Division 15 and 16.

3.06 FIELD QUALITY CONTROL

A. Section 01 4500 - Quality Control: Contractor Quality Control Representative shall perform contractor quality control inspections.
   1. Inspect trenching operations, fill placement, fill type and compaction density.
   2. Document preparatory, initial and follow-up inspection in Contractor Test and Inspection Reports and submit to Architect.

B. Section 01 4500 - Testing Laboratory Services: Perform the following tests.
   1. Compaction density testing on compacted fill in accordance with ASTM D 2922.
   2. Evaluate results in relation to compaction curve determined by testing uncompacted material in accordance with ASTM D 698 (Standard Proctor).
   3. If tests indicate work does not meet specified requirements, remove work, replace and retest.
   4. Frequency of Tests:
      1. For backfill areas at Paved Areas: _____1_____ for each 2 feet of backfill for each 400 feet, or portion, of trenching.

C. Correct deficiencies in products and installation found not to be in compliance with Contract Documents.

3.07 CLEAN-UP

A. Leave unused materials in a neat, compact stockpile.

B. Remove unused stockpiled materials, leave area in a clean and neat condition. Grade stockpile area to prevent standing surface water.

---------- END OF SECTION ----------

----------THIS PAGE LEFT INTENTIONALLY BLANK----------

DIVISION 31 - EARTHWORK

SOIL TREATMENT FOR TERMITE CONTROL SECTION 31 31 16

PART 1 GENERAL

1.01 RELATED DOCUMENTS

A. Drawings and general provisions of the Contract, including General and Supplementary Conditions and Division 1 Specification Sections, apply to this Section.

1.02 SUMMARY

A This Section includes the following for termite control:

1. Soil Treatment

1.03 SUBMITTALS

A. Product Data: Treatments and application instructions, including EPA-Registered Label.

B. Product Certificates: Signed by manufacturers of termite control products certifying that teatments furnished comply with requirements.

C. Qualification Data: For firms and persons specified in "Quality Assurance" Article to demonstrate their capabilities and experience. Include lists of completed projects with project names and addresses, names and addresses of architects and owners, and other information specified.

D. Soil Treatment Application Report: After application of termiticide is completed, submit report for Owner's record information, including the following as applicable:

1. Date and time of application.
2. Moisture content of soil before application.
3. Brand name and manufacturer of termiticide.
4. Quantity of undiluted termiticide used.
5. Dilutions, methods, volumes, and rates of application used.
6. Areas of application.
7. Water source for application.

E. Warranties: Special warranties specified in this Section.

1.04 QUALITY ASSURANCE

A. Applicator Qualifications: A PCO who is licensed according to regulations of authorities having jurisdiction to apply termite control treatment in jurisdiction where Project is located and who is experienced and has completed termite control treatment similar to that indicated for this Project and whose work has a record of successful in-service performance.

B. Regulatory Requirements: Formulate and apply termiticides, and label with a Federal registration number, to comply with EPA regulations and authorities having jurisdiction.

1.05 PROJECT CONDITIONS

A. Environmental Limitations: To ensure penetration, do not treat soil that is water saturated or frozen. Do not treat soil while precipitation is occurring. Comply with EPA-Registered Label requirements and requirements of authorities having jurisdiction.

1.06 COORDINATION

A. Coordinate soil treatment application with excavating, filling, and grading and concreting operations. Treat soil under footings, grade beams, and ground-supported slabs, before construction.

1.07 WARRANTY

A. General Warranty: Special warranty specified in this Article shall not deprive Owner of other rights Owner may have under other provisions of the Contract Documents and shall be in addition to, and run concurrent with, other warranties made by Contractor under requirements of the Contract Documents.

B. Warranty Period: Five years from date of Substantial Completion.
Provide Annual Inspection and retreat schedule.

PART 2 PRODUCTS

2.01 SOIL TREATMENT

A. Termiticide: Provide an EPA-registered termiticide complying with requirements of authorities having jurisdiction, in a soluble or emulsible, concentrated formulation that dilutes with water or foaming agent, and formulated to prevent termite infestation. Use only soil treatment solutions that are not harmful to plants. Provide quantity required for application at the label volume and rate for the maximum termiticide concentration allowed for each specific use, according to the product's EPA-Registered Label.

B. Available Manufacturers: Subject to compliance with requirements, manufacturers offering products that may be incorporated into the Work include, but are not limited to, the following:

C. Manufacturers: Subject to compliance with requirements, provide products by one of the following:

1. AgrEvo Environmental Health, Inc.; a Company of Hoechst and Schering, Berlin.
2. American Cyanamid Co.; Agricultural Products Group; Specialty Products Department.
3. Bayer Corp.; Garden & Professional Care.
4. DowElanco.
5. FMC Corp.; Pest Control Specialties.
6. Zeneca Professional Products.

PART 3 EXECUTION

3.01 EXAMINATION

A. Examine substrates, areas, and conditions, with Applicator present, for compliance with requirements for moisture content of the soil, interfaces with earthwork, slab and foundation work, landscaping, and other conditions affecting performance of termite control. Proceed with application only after unsatisfactory conditions have been corrected.

3.02 PREPARATION

A. General: Comply with the most stringent requirements of authorities having jurisdiction and with manufacturer's written instructions for preparing substrate. Remove all extraneous sources of wood cellulose and other edible materials such as wood debris, tree stumps and roots, stakes, formwork, and construction waste wood from soil and around foundations.

B. Soil Treatment Preparation: Remove foreign matter and impermeable soil materials that could decrease treatment effectiveness on areas to be treated. Loosen, rake, and level soil to be treated, except previously compacted areas under slabs and footings. Termiticides may be applied before placing compacted fill under slabs if recommended by termiticide manufacturer.

C. Fit filling hose connected to water source at the site with a backflow preventer, complying with requirements of authorities having jurisdiction.

3.03 APPLICATION, GENERAL

A. General: Comply with the most stringent requirements of authorities having jurisdiction and with manufacturer's EPA-Registered Label for products.

3.04 APPLYING SOIL TREATMENT

A. Application: Mix soil treatment termiticide solution to a uniform consistency. Provide quantity required for application at the label volume and rate for the maximum specified concentration of termiticide, according to manufacturer's EPA-Registered Label, to the following so that a continuous horizontal and vertical termiticidal barrier or treated zone is established around and under building construction. Distribute the treatment evenly.

1. Slabs-on-Grade and Basement Slabs: Under ground-supported slab construction, including footings, building slabs, and attached slabs as an overall treatment. Treat soil materials before concrete footings and slabs are placed.

2. Foundations: Adjacent soil including soil along entire inside perimeter of foundation walls, along both sides of interior partition walls, around plumbing pipes and electric conduit penetrating slab, and around interior column footers, piers, and chimney bases; and along entire outside perimeter, from grade to bottom of footing. Avoid soil washout around footings.

3. Masonry: Treat voids.

4. Penetrations: At expansion joints, control joints, and areas where slabs will be penetrated.

B. Protect termiticide solution, dispersed in treated soils and fills, from being diluted until ground-supported slabs are installed. Use waterproof barrier according to EPA-Registered Label instructions.

C. Post warning signs in areas of application.

D. Reapply soil treatment solution to areas disturbed by subsequent excavation, grading, landscaping, or other construction activities following application.

----------END OF SECTION ----------

PART 1 GENERAL

1.1 SUMMARY

A. Section Includes:
1. Excavating for building, footings and slabs-on-grade.
2. Excavating for utilities within the building.

B. Related Documents:
1. The Contract Documents, as defined in the EJCDC C-700 Standard General Conditions of the Construction Contract and modifications thereto, apply to the Work of this Section. Additional requirements and information necessary to complete the Work of this Section may be found in other documents.

C. Related Sections:
1. Section 31 2200 - Grading: Rough and finish grading.
2. Section 31 2324 - Fill and Backfill: Fill materials, filling, and compacting.
3. Section 31 2316 – Excavation - Spread and Continuous Footings: Building foundation.
4. Section 31 2333 - Trenching and Backfill: Excavating for utility trenches outside the building.
5. Section 31 6331 - Drilled Concrete Piers and Shafts: Building foundation.

1.2 DEFINITIONS

A. Building Area Sub-grade Pad: Portion of site directly beneath and within a line 5 feet beyond building line indicated on Drawings.

1.3 REGULATORY REQUIREMENTS

A. Provide protection for workers within trench areas in accordance with local and state Occupational Safety and Health requirements and in conformance with Occupational Safety and Health Administration regulations contained in U.S. Department of Labor, Standard 29 CFR, Part 1926 “Safety and Health Regulations for Construction” and Contractor’s Site Safety Program.

1.4 PROJECT CONDITIONS

A. Verify that survey bench mark and intended elevations for the Work are as indicated.

B. Protect plants, lawns, rock outcroppings, and other features to remain.

C. Protect bench marks, survey control points, existing structures, fences, sidewalks, paving, and curbs from excavating equipment and vehicular traffic.

PART 2 PRODUCTS

Not Used.

PART 3 EXECUTION

3.1 EXAMINATION

A. Section 01 7300 - Execution: Verification of existing conditions before starting work.

B. Verification of Conditions: Verify that field measurements, surfaces, substrates and conditions are as required, and ready to receive Work.
   1. Verify that survey bench mark and intended elevations for the Work are as indicated.

C. Report in writing to Architect prevailing conditions that will adversely affect satisfactory execution of the Work of this Section. Do not proceed with Work until unsatisfactory conditions have been corrected.

D. By beginning Work, Contractor accepts conditions and assumes responsibility for correcting unsuitable conditions encountered at no additional cost to the Owner.

3.2 PREPARATION

A. Identify required lines, levels, contours, and datum locations.

B. Stake and flag locations of known utilities before starting any grading or excavating work.

   1. Contact Oklahoma One Call System at (800) 522-6543 for utility company location of existing lines on or adjacent to Project site.

C. Locate depth of existing building foundations and footings by excavation of test pits prior to excavating.

D. See Section 31 2200 - Grading for additional requirements.

3.3 EXCAVATING

A. Strip and remove all vegetation, top soil, paving and any loose material below Building Area Subgrade Pad as specified in Section 31 1000 - Site Clearing. Scarify and compact as specified in Section 31 2324 - Fill and Backfill. Refer to Foundation and Excavation Notes on Structural Drawings.

B. Excavate to accommodate new structures and construction operations.

C. Notify Architect of unexpected subsurface conditions and discontinue affected Work in area until notified to resume work.

D. Slope banks of excavations deeper than 4 feet to angle of repose or less until shored.

E. Do not interfere with 45 degree bearing splay of foundations.

F. Cut utility trenches wide enough to allow inspection of installed utilities.

G. Hand trim excavations. Remove loose matter.

H. Remove lumped subsoil, boulders and rock up to 1/3 cubic yard measured by volume. Notify Architect if larger rock is encountered.

I. Correct areas that are over-excavated and load-bearing surfaces that are disturbed; see Section 31 2324 - Fill and Backfill.

J. Grade top perimeter of excavation to prevent surface water from draining into excavation.
   1. Do not allow water to accumulate in excavations.
   2. Remove accumulated water in excavations.
   3. Provide and maintain pumps, sumps, suction and discharge lines and other dewatering system components required to remove water from excavations.

K. Remove excavated material that is unsuitable for re-use from site.

L. Stockpile excavated material to be re-used in area designated on site in accordance with Section 31 2200 - Grading.

M. Remove excess excavated material from site.

N. If it is required that footing excavations be left open for more than a 24 hour period, they should be protected to reduce evaporation or entry of soil moisture. Water should not be allowed to collect near the foundations or floor slab areas.

3.4 FIELD QUALITY CONTROL

A. Section 01 4500 - Quality Control: Contractor Quality Control Representative shall perform contractor quality control inspections.
   1. Inspect excavation operations, excavations for building foundations and utilities, dimensions, depths and material stockpiles.
   2. Document preparatory, initial and follow-up inspection in Contractor's Test and Inspection Reports.
   3. Test and Inspection Reports shall be available to Architect upon request.

B. Correct deficiencies in products and installation found not to be in compliance with Contract Documents.

3.5 PROTECTION

A. Prevent displacement of banks and keep loose soil from falling into excavation; maintain soil stability.

B. Protect bottom of excavations and soil adjacent to and beneath foundation from freezing.

---------- END OF SECTION ----------

----------THIS PAGE LEFT INTENTIONALLY BLANK----------

DIVISION 32 – EXTERIOR IMPROVEMENTS
FIELD MOLDED SEALANTS FOR SEALING JOINTS IN RIGID PAVEMENTS SECTION 32 01 19

PART 1: GENERAL

1.01 REFERENCES

A. The publications listed below form a part of this specification to the extent referenced. The publications are referred to in the text by basic designation only.

AMERICAN SOCIETY OF TESTING AND MATERIALS (ASTM)

ASTM C 509	(1991) Elastomeric Cellular Preformed Gasket and Sealing Material
ASTM D 789	(1992) Determination of Relative Viscosity, Melting Point and Moisture Content of Polyamide
AASHTO M213	Performed Expansion Joint Filler

1.02 SUBMITTALS

A. The following shall be submitted in accordance with Section 01300: SUBMITTAL DESCRIPTION.

Instructions

Manufacturer's Recommendations;

Where installation procedures or any part thereof, are required to be in accordance with the manufacturer's recommendations, printed copies of these recommendations, 30 days prior to use on the project. Installation of the material will not be allowed until the recommendations are received. Failure to furnish these recommendations can be cause for rejection of the material.

Schedules

Construction Equipment List;

List of proposed equipment to be used in performance of construction work including descriptive data, 30 days prior to use on the project.

1.03 EQUIPMENT

A. Machines, tools and equipment used in performance of the work required by this section shall be approved before the work is started and shall be maintained in a satisfactory condition at all times.

B. Joint Cleaning Equipment:

1. Concrete Saw: A self-propelled power saw with water-cooled diamond or abrasive saw blades will be provided for cutting joints to the depths and widths specified or for re-facing joints or cleaning sawed joints where sandblasting does not provide a clean joint.

2. Sandblasting Equipment: Sandblasting equipment shall include an air compressor, hose and longwearing venturi-type nozzle of proper size, shape and opening. The maximum nozzle opening should not exceed ¼". The air compressor shall be portable and shall be capable of furnishing not less than 150 cubic feet per minute and maintaining a line pressure of not less than 90 psi at the nozzle while in use. Compressor capability under job conditions must be demonstrated before approval. The compressor shall be equipped with traps that will maintain the compressed air free of oil and water. The nozzle shall have an adjustable guide that will hold the nozzle aligned with the joint approximately 1" above the pavement surface. The height, angle of inclination and the size of the nozzle shall be adjusted as necessary to secure satisfactory results.

3. Hand Tools: Hand tools may be used, when approved, for removing defective sealant from a crack and repairing or cleaning the crack faces.

C. Sealing Equipment:

1. Single-Component Sealing Equipment: The equipment for installing COE CRD-C 527 single component joint sealants shall consist of an extrusion pump, air compressor, following plate, hoses and nozzle for transferring the sealant from the storage container into the joint opening. The dimension of the nozzle shall be such that the tip of the nozzle will extend into the joint to allow sealing from the bottom of the joint to the top. The initially approved equipment shall be maintained in good working condition, serviced in accordance with the supplier's instructions and shall not be altered in any way without obtaining prior approval. Small hand-held air-powered equipment (i.e., caulking 9-guns) may be used for small applications.

1.04 DELIVERY AND STORAGE

A. Materials delivered to the jobsite shall be inspected for defects, unloaded and stored with a minimum of handling to avoid damage. Storage facilities shall be provided by the Contractor at the jobsite for maintaining materials at the temperatures and conditions recommended by the manufacturer.

1.05 ENVIRONMENTAL CONDITIONS

A. The ambient air temperature and the pavement temperature within the joint wall shall be a minimum of 50ºF and rising at the time of application of the materials. Sealant shall not be applied if moisture is observed in the joint.

PART 2: PRODUCTS

2.01 SEALANTS

A. 1-Component, ployurethank-based, non-sag elastomeric sealant. ASTM C920 being Sikaflex Construction Sealant, 1C SL and 1a.

2.02 PRIMERS

A. Primers, when their use is recommended by the manufacturer of the sealant, shall be as recommended by the manufacturer of the sealant.

2.03 BACKUP MATERIALS

A. The backup material shall be a compressible, non-shrinking, non-staining, non-absorbing material and shall be non-reactive with the joint sealant. The material shall have a melting point at least 5ºF greater that the pouring temperature of the sealant being used when tested in accordance with ASTM D 789. The material shall have a water absorption of not more than 5% of the sample eight when tested in accordance with ASTM S 509. The backup material shall be 25 plus or minus 5% larger in diameter than the nominal width of the crack.

2.04 BOND BREAKING TAPES

A. The bond breaking tape or separating material shall be a flexible, non-shrinkable, non-absorbing, non-staining and non-reacting adhesive-backed tape. The material shall have a melting point at least 5ºF greater than the pouring temperature of the sealant being used when tested in accordance with ASTM D 789. The bond breaker tape shall be approximately ⅛” wider than the nominal width of the joint and shall not bond to the joint sealant.

PART 3: EXECUTION

3.01 PREPARATION OF JOINTS

A. Immediately before the installation of the sealant, the joints shall be thoroughly cleaned to remove all laitance, curing compound, filler, protrusions of hardened concrete and old sealant from the sides and upper edges of the joint space to be sealed.

B. Sawing:

1. Facing of Joint: Facing of joints shall be accomplished using a concrete saw as specified in paragraph “EQUIPMENT” to saw through sawed and filler-type joints to loosen and remove material until the joint is clean and open to the full specified width and depth. The blade shall be stiffened with a sufficient number of suitable dummy (used) blades or washers. Immediately following the sawing operation, the joint opening shall be thoroughly cleaned using a water jet to remove all saw cuttings and debris.

2. Sandblasting: The newly exposed concrete joint faces and the pavement surfaces extending a minimum of ½” from the joint edges shall be sandblasted clean. A multiple-pass technique shall be used until the surfaces are free of dust, dirt, curing compound, filler, old sealant residue or any foreign debris that might prevent the bonding of the sealant to the concrete.

After final cleaning and immediately prior to sealing, the joints shall be blown out with compressed air and left completely free of debris and water.

3. Back-up Material: When the joint opening is of a greater depth than indicated for the sealant depth, the lower portion of the joint opening shall be plugged or sealed off using a backup material to prevent the entrance of the sealant below the specified depth. Care shall be taken to ensure that the backup material is placed at the specified depth and is not stretched or twisted during installation.

4. Bond Breaking Tape: Where inserts or filler materials contain bitumen or the depth of the joint opening does not allow for the use of a backup material, a bond breaker separating tape will be inserted to prevent incompatibility with the filler materials and three-sided adhesion of the sealant. The tape shall be securely bonded to the bottom of the joint opening so it will not float up into the new sealant.

5. Rate of Progress of Joint Preparation: The stages of joint preparation, which include sandblasting, air pressure cleaning and placing of the backup material shall be limited to only that linear footage that can be sealed during the same day.

3.02 PREPARATION OF SEALANT

A. Cold-Applied Sealants: The COE CRD-C 527 sealant and containers shall be inspected prior to use. Any materials that contain water, hard caking of any separated constituents, non-reversible jell or materials that are otherwise unsatisfactory shall be rejected. Settlement of constituents in a soft mass that can be readily and uniformly re-mixed in the field with simple tools will not be cause for rejection.

3.03 INSTALLATION OF SEALANT

A. Time of Application: Joints shall be sealed immediately following final cleaning of the joint walls and following the placement of the separating or backup material. Open joints that cannot be sealed under the conditions specified or when rain interrupts sealing operations shall be re-cleaned and allowed to dry prior to installing the sealant.

B. Sealing Joints: Immediately proceeding but not more than 50’ ahead of the joint sealing operations, a final cleaning with compressed air shall be performed. The joints shall be filled from the bottom up to ¼” plus or minus 1/16” below the pavement surface. Excess or spilled sealant shall be removed from the pavement by approved methods and shall be discarded. The sealant shall be installed in such a manner as to prevent the formation of voids and entrapped air. In no case shall gravity methods or pouring pots be used to install the sealant material. Traffic shall not be permitted over newly sealed pavement until authorized by the Engineer. When the manufacturer recommends a primer it shall be applied evenly to the joint faces in accordance with the manufacturer’s instructions. Joints shall be checked frequently to ensure that the newly installed sealant is cured to a tack-free condition within the time specified.

3.04 INSPECTION

A. Joint Cleaning: Joints shall be inspected during the cleaning process to correct improper equipment and cleaning techniques that damage the concrete pavement in any manner. Cleaned joints shall be approved prior to installation of the separating or backup material and joint sealant.

B. Joint Sealant Application Equipment: The application equipment shall be inspected to ensure conformance to temperature requirements and proper installation. Evidence of bubbling, improper installation, failure to cure or set shall be cause to suspend operations until causes of the deficiencies are determined and corrected.

C. Joint Sealant: The joint sealant shall be inspected for proper rate of cure and set, bonding to the joint walls, cohesive separation within the sealant, reversion to liquid, entrapped air and voids. Sealants exhibiting any of these deficiencies at any time prior to the final acceptance of the project shall be removed from the joint, wasted and replaced as specified herein at no additional cost to the Owner.

3.05 CLEANUP

A. Upon completion of the project, all unused materials shall be removed from the site and the pavement shall be left in a clean condition.

----------END OF SECTION ----------

----------THIS PAGE LEFT INTENTIONALLY BLANK----------

SECTION 32 1124

GRADED CRUSHED AGGREGATE BASE COURSES

PART 1 - GENERAL

1.01 SECTION INCLUDES

A. Aggregate base material.

B. Installation standards.

C. Spreading of material.

D. Compacting.

E. Field quality control.

1.02 CLASSIFICATION

A. Aggregate bases are designated as Class 1 or Class 2. The class of aggregate base shall be as indicated.

1.03 REFERENCES

A. American Society for Testing and Materials (ASTM):

1.	ASTM C136	Test Method for Sieve Analysis of Fine and Coarse Aggregates
2.	ASTM D421	Practice for Dry Preparation of Soil Samples for Particle-Size Analysis and Determination of Soil Constants
3.	ASTM D1241	Specification for Materials for Soil-Aggregate Subbase, Base, and Surface Courses
4.	ASTM D1557	Test Method for Laboratory Compaction Characteristics of Soil Using Modified Effort
5.	ASTM D2419	Test Method for Sand Equivalent Value of Soils and Fine Aggregate
6.	ASTM D2844	Test Method for Resistance R-Value and Expansion Pressure of Compacted Soils
7.	ASTM D2922	Test Methods for Density of Soil and Soil-Aggregate in Place by Nuclear Methods (Shallow Depth)

8. ASTM D3017 Test Method for Moisture Content of Soil and Soil- Aggregate in Place by Nuclear Methods (Shallow Depth)

9. ASTM D3744 Test Method for Aggregate Durability Index

1.04 SUBMITTALS

A. General: Refer to Section 01 33 00 - Submittal Procedures, for submittal requirements and procedures.

B. Product Data: Submit source, gradation, R-value, sand equivalent, and durability for the proposed base course material.

C. Test Reports: Submit plant and field test reports as specified in Articles 2.02 and 3.05 herein.

PART 2 - PRODUCTS

2.01 AGGREGATE BASE MATERIAL

A. Aggregate for the two classes of aggregate bases at the time the base material is deposited on the prepared sub grade or sub base shall conform with ASTM D1241 and the following requirements:

1. Class 1 Aggregate Base: ODOT Type A Aggregate Base

a. Class 1 aggregate base shall consist of crushed stone or gravel, free from vegetable matter and other deleterious substances. Aggregate shall consist of material of which 90 percent by weight shall be crushed particles. Composition of aggregate base, in percentages by weight, shall conform to one of the following gradings, determined in accordance with ASTM C136:

Percentage Passing Sieves

Sieve Sizes	1-1/2 inch Maximum	3/4-inch Maximum
2-inch	100	
1-1/2 inch	100	100
3/4-inch	30-75	90-100
No. 4	25-60	35-55
No. 20	0-30	10-30
No. 200	0-10	2-9

b. Class 1 aggregate base shall conform to the following additional requirements:

Tests	ASTM Test Method	Requirements
Resistance (R-Value)	D2844	80 min.
Sand Equivalent	D2419	50 min.
Durability Index	D3744	40 min.

2. Class 2 Aggregate Base: ODOT #57 Course Rock

a. Class 2 aggregate base shall be free of vegetable matter and other deleterious substances. Coarse aggregate, material contained on the No. 4 sieve, shall consist of material of which 25 percent by weight shall be crushed particles. Class 2 aggregate base shall conform to one of the following gradings, determined in accordance with ASTM C136:

Percentage Passing Sieves

Sieve Sizes	1 ½ inch Maximum
2-inch	100
1½ inch	100
1-inch	95-100
¾ -inch	-------
½ -inch (12.5 mm)	25-60
No.4	0-10
No. 200	0-2

b. Class 2 aggregate base shall conform to the following additional requirements:

Tests	ASTM Test Method	Requirements
Resistance (R-Value)	D2844	78 min.
Sand Equivalent	D2419	30 min.
Durability Index	D3744	35 min.

2.02 SOURCE QUALITY CONTROL

A. The Contractor shall perform sampling and tests of the aggregate base material in accordance with the ASTM Test Methods herein specified, to determine compliance with specified requirements. Samples shall be taken from material as delivered to the site, and shall be prepared in accordance with ASTM D421, as applicable.

B. Aggregate grading or sand equivalent test shall represent no more than 500 cubic yards of base course material or one day's production, whichever is the greater amount.

PART 3 - EXECUTION

3.01 EXAMINATION

A. The Contractor shall call for an inspection by the Engineer and obtain written acceptance of the prepared sub grade or sub base before proceeding with the placement of aggregate base course.

B. The sub grade or sub base to receive aggregate base course, immediately prior to spreading, shall conform to the compaction and elevation tolerances indicated for the material involved and shall be free of standing water and loose or extraneous material.

3.02 INSTALLATION STANDARDS

A. Aggregate base course shall be applied over the prepared sub grade or sub base and compacted.

B. Aggregate base course shall have minimum uniform thickness after compaction of dimensions indicated. Where not indicated, compacted thickness shall be 6 inches.

C. All compaction expressed in percentages in this section refers to the maximum dry density as determined by ASTM D1557.

3.03 SPREADING OF MATERIAL

A. Aggregate for base course shall be delivered as uniform mixture of fine and coarse aggregate and shall be spread in layers without segregation.

B. Aggregate base course material shall be free from pockets of large and fine material. Segregated materials shall be remixed until uniform.

C. Aggregate base material shall be moisture-conditioned to near optimum moisture content.

D. Aggregate base course 6 inches and less in thickness may be spread and compacted in one layer. For thickness greater than 6 inches, the base course aggregate shall be spread and compacted in two or more layers of uniform thickness not greater than 6 inches each.

3.04 COMPACTING

A. Relative compaction of each layer of compacted aggregate base material shall be not less than 95 percent as determined by ASTM D1557.

B. Thickness of finished base course shall not vary more than 3/4 inch from the indicated thickness at any point. Base that does not conform to this requirement shall be reshaped or reworked, watered, and recompact to achieve compliance with specified requirements.

C. The surface of the finished aggregate base course at any point shall not vary more than 3/4 inch above or below the indicated grade.

3.05 FIELD QUALITY CONTROL

A. The Contractor shall perform field tests in accordance with ASTM D2922 to determine compliance with specified requirements for density and compaction of aggregate base material, and with ASTM D3017 to determine moisture-content compliance of the installed base course.

B. Testing frequency shall be not less than one test for every 2,000 square feet of base course material, per layer or lift.

END OF SECTION 32 1124

----------THIS PAGE LEFT INTENTIONALLY BLANK----------

PART 1 GENERAL

1.01 SUMMARY

A. Section Includes:
   1. Concrete pavement parking areas, and driveways.
   2. Aggregate subgrade base

B. Related Documents:
   1. The Contract Documents, as defined in the General Conditions **(EJCDC C-700 Standard General Conditions of the Construction Contract**), apply to the Work of this Section. Additional requirements and information necessary to complete the Work of this Section may be found in other documents.

C. Related Sections:
   1. Section 31 2200 - Grading: Preparation of site for paving and base and preparation of subsoil at pavement perimeter for planting.
   2. Section 31 2324 - Fill and Backfill: Compacted subbase for paving.
   3. Section 32 1723 - Pavement Markings: Parking lot stripping.
   4. Section 32 1713 - Parking Bumpers: Precast concrete bumpers.
   5. Section 32 1314 - Concrete Walks and Pads: Sidewalks, stoops and equipment pads.
   6. Section 03 1000 - Concrete Forms and Accessories: Forms for site concrete.
   7. Section 03 2000 - Concrete Reinforcement: Reinforcement for site concrete.
   8. Section 03 3000 - Cast-In-Place Concrete: Concrete for sitework.
   9. Section 32 1373 - Joint Sealers: Sealant for joints.

1.02 REFERENCES

A. American Concrete Institute (ACI):
   1. ACI 301 - Specifications for Structural Concrete for Buildings.
   2. ACI 305R - Hot Weather Concreting.
   3. ACI 306R - Cold Weather Concreting.

B. American Society for Testing and Materials (ASTM):
   1. ASTM D 1751 - Standard Specification for Preformed Expansion Joint Filler for Concrete Paving and Structural Construction (nonextruding and Resilient Bituminous Types).

C. Oklahoma Department of Transportation (ODOT):
   1. ODOT - State of Oklahoma Department of Transportation Standard Specifications for Highway Construction.

1.03 SUBMITTALS

A. Submit as part of submittal for Section 01 3300.

1.04 QUALITY ASSURANCE

A. Perform work in accordance with ODOT standards.
   1. Section 303 - Aggregate Base.
   2. Section 414 - Portland Cement Concrete Pavement.

B. Perform work in accordance with ACI 301.

C. Follow recommendations of ACI 305R when concreting during hot weather.

D. Follow recommendations of ACI 306R when concreting during cold weather.

E. Construct Work within public right-of-way in accordance with requirements of the Authority Having Jurisdiction.

1.05 PROJECT CONDITIONS

A. Environmental Requirements:
   1. Do not place concrete when base surface temperature is less than 40 degrees F, or surface is wet or frozen.

PART 2 PRODUCTS

2.01 FORM MATERIALS

A. Form Materials: Specified in Section 03 1000.

B. Plywood, metal metal-framed plywood, or other approved panel-type materials to provide full-depth, continuous, straight, smooth exposed surfaces.

C. Joint Filler: ASTM D 1751 preformed; non-extruding bituminous type.
   1. Thickness: 1/2 inch.

2.02 REINFORCEMENT

A. Reinforcing: Types specified in Section 03 2000 and indicated on Drawings.

2.03 CONCRETE MATERIALS

A. Concrete Materials: Specified in Section 03 3000.

B. Concrete Strength: Minimum compressive strength of 4000 psi at 28 days with air-entraining admixture providing minimum 4 percent and maximum 6 percent air by volume.

2.04 BASE MATERIALS

A. Aggregate: Provide Type A aggregate base conforming to ODOT Section 303, thickness indicated on Drawings.

2.05 ACCESSORIES

A. Joint Sealer: Specified in Section 32 1373.

B. Herbicide: Commercial non-selective soil sterilant chemical for weed control, registered by the U.S. Environmental Protection Agency. Use type of herbicide approved by the local office of the County Extension Agent or local authority having jurisdiction.

PART 3 EXECUTION

3.01 EXAMINATION

A. Section 01 7300 - Execution Requirements: Verification of existing conditions before starting work.

B. Verification of Conditions: Verify that field measurements, surfaces, substrates and conditions are as required, and ready to receive work.
   1. Verify compacted subgrade is acceptable and ready to support paving and imposed loads.
   2. Verify gradients and elevations of base are correct.

C. Report in writing to Architect and Owner's Representative prevailing conditions that will adversely affect satisfactory execution of the Work of this Section. Do not proceed with Work until unsatisfactory conditions are corrected.

D. By starting Work, Contractor accepts conditions and assumes responsibility for correcting unsuitable conditions encountered at no additional cost to Owner.

3.03 BASE COURSE

A. Place aggregate base course in accordance with ODOT requirements.

B. Apply herbicide to soil areas under aggregate base to inhibit growth of weeds. Apply in accordance with manufacturer's recommended rates and published instructions. Apply to dry, prepared subgrade surface before placement of aggregate base.

C. Spread aggregate over prepared subgrade to total thickness indicated.

D. Level and contour surfaces to elevations and gradients indicated on Drawings.

E. Add small quantities of fine aggregate to course aggregate as appropriate to assist compaction.

F. Add water to assist compaction. If excess water is apparent, remove aggregate and aerate to reduce moisture content.

G. Use mechanical tamping equipment in areas inaccessible to compaction equipment.

3.04 PREPARATION

A. Moisten base to minimize absorption of water from fresh concrete.

B. Notify Architect minimum 24 hours prior to commencement of concreting operations.

3.05 FORMING

A. Place and secure forms to correct location, dimension, profile, and gradient.

B. Assemble formwork to permit easy stripping and dismantling without damaging concrete.

C. Place joint filler vertical in position, in straight lines. Secure to formwork during concrete placement.

3.06 REINFORCEMENT

A. Reinforce pavement as indicated on Drawings.

B. Place dowels to achieve pavement and curb alignment as detailed.

3.07 PLACING CONCRETE

A. Place concrete as specified in Section 03 3000; thickness indicated on Drawings.

B. Ensure reinforcement, inserts, embedded parts and formed joints are not disturbed during concrete placement.

C. Place concrete continuously over the full width of the panel and between predetermined construction joints. Do not break or interrupt successive pours such that cold joints occur.

3.08 JOINTS

A. Align curb, gutter, and sidewalk joints.

B. Place 3/8 inch wide expansion joints at 20 foot intervals and to separate paving from vertical surfaces and other components and in pattern indicated.
   1. Form joints with joint filler extending from bottom of pavement to within 1/2 inch of finished surface.
   2. Secure to resist movement by wet concrete.

C. Provide scored joints:
   1. Between sidewalks and curbs.
   2. Between curbs and pavement.

D. Provide keyed joints as indicated.

E. Saw cut contraction joints 3/16 inch wide at an optimum time after finishing. Cut 1/3 into depth of slab.

3.09 FINISHING

A. Area Paving: Light broom, texture perpendicular to pavement direction.

B. Curbs and Gutters: Light broom, texture parallel to pavement direction.

3.10 JOINT SEALING

A. See Section 07 9200 for joint sealer requirements.

3.11 TOLERANCES

A. Maximum Variation of Surface Flatness: 1/4 inch in 10 feet.

3.12 FIELD QUALITY CONTROL

A. Section 01 4500 - Quality Control: Perform contractor quality control inspections.
   1. Inspect concrete pavement installation, type, dimensions, thickness and finish.
   2. Document preparatory, initial and follow-up inspection in Contractor Test and Inspection Reports and submit to Architect.

B. Section 01 4500 - Testing Laboratory Services: Independent testing agency will perform concrete tests as specified in Section 03 3000.

C. Correct deficiencies in products and installation found not to be in compliance with Contract Documents.

3.13 PROTECTION

A. Immediately after placement, protect pavement from premature drying, excessive hot or cold temperatures, and mechanical injury.

B. Do not permit pedestrian traffic over pavement for 7 days minimum after finishing.

---------- END OF SECTION ----------

----------THIS PAGE LEFT INTENTIONALLY BLANK----------

PART 1 GENERAL

1.01 SUMMARY

A. Section Includes:
1. Concrete sidewalks.
2. Concrete equipment pads.

B. Related Sections:
1. Section 03 1000 - Concrete Forms and Accessories: Forms for site concrete.
2. Section 03 2000 - Concrete Reinforcement: Reinforcement for site concrete.
3. Section 03 3000 - Cast-In-Place Concrete: Concrete for sitework.
5. Section 32 1373 - Joint Sealers: Sealant for joints.

1.02 REFERENCES

A. Americans With Disabilities Act (ADA):
1. ADA; Americans with Disabilities Act; Federal Register, Volume 56, No. 144 28 CFR part 36.

B. American National Standards Institute (ANSI):
1. ANSI/ICC A117.1 - American National Standard for Accessible and Useable Buildings and Facilities; International Code Council.

C. American Concrete Institute (ACI):
1. ACI 301 - Specifications for Structural Concrete for Buildings.
2. ACI 302.1R - Guide for Concrete Floor and Slab Construction.
3. ACI 305R - Hot Weather Concreting.
4. ACI 306R - Cold Weather Concreting.
5. ACI 308 - Standard Practice for Curing Concrete.

D. American Society for Testing and Materials (ASTM):
1. ASTM A 185 - Standard Specification for Welded Steel Wire Fabric for Concrete Reinforcement.
2. ASTM A 615 - Standard Specification for Deformed and Plain Billet-Steel Bars for Concrete Reinforcement.
3. ASTM C 94 - Standard Specification for Ready-Mixed Concrete.
4. ASTM C 920 - Standard Specification for Elastomeric Joint Sealants.
5. ASTM C 1193 - Standard Guide for Use of Joint Sealants.
6. ASTM D 1751 - Standard Specification for Preformed Expansion Joint Filler for Concrete Paving and Structural Construction (nonextruding and Resilient Bituminous Types).

1.03 SUBMITTALS

A. Submit as part of submittal for Section 03 3000.

1.04 QUALITY ASSURANCE

A. Perform work in accordance with ACI 301.

B. Follow recommendations of ACI 305R when concreting during hot weather.

C. Follow recommendations of ACI 306R when concreting during cold weather.

1.05 PROJECT CONDITIONS

A. Environmental Requirements:
   1. Do not place concrete when base surface temperature is less than 40 degrees F, or surface is wet or frozen.

PART 2 PRODUCTS

2.01 FORM MATERIALS

A. Form Materials: Specified in Section 03 1000.

B. Wood form material, profiled to suit conditions.

C. Joint Filler: ASTM D 1751 preformed; non-extruding bituminous type.
   1. Thickness: 1/2 inch.

2.02 REINFORCEMENT

A. Reinforcing: Specified in Section 03 2000.

B. Reinforcing Bars: ASTM A 615, Grade 60, deformed billet bars, unfinished, sizes indicated on Drawings.

C. Welded Wire Fabric: ASTM A 185, Grade 65, steel spot welded at intersections; sizes indicated on Drawings.

2.03 CONCRETE

A. Concrete Materials: Specified in Section 03 3000.

B. Concrete Materials: ASTM C 94; Normal Portland Cement.

C. Compressive Strength: Minimum compressive strength of 3,500 psi at 28 days with air-entraining admixture providing minimum 4 percent and maximum 6 percent air by volume.

2.04 ACCESSORIES

A. Joint Sealer: Specified in Section 32 1373.

B. Joint Sealer: Polyurethane, self-leveling; ASTM C 920, Class 25, traffic grade, gray color.

C. Sand Cushion: Natural river or bank sand; washed; free of silt, clay, loam, friable or soluble materials, and organic matter.

PART 3 EXECUTION

3.01 EXAMINATION

A. Section 01 7300 - Execution Requirements: Verification of existing conditions before starting work.

B. Verification of Conditions: Verify that field measurements, surfaces, substrates and conditions are as required, and ready to receive Work.
   1. Verify compacted subgrade is acceptable and ready to support walks, pads and imposed loads.
   2. Verify gradients and elevations of base are correct.

C. Report in writing to Architect prevailing conditions that will adversely affect satisfactory execution of the Work of this Section. Do not proceed with Work until unsatisfactory conditions have been corrected.

D. By beginning Work, Contractor accepts conditions and assumes responsibility for correcting unsuitable conditions encountered at no additional cost to the Owner.

3.02 PREPARATION

A. Subgrade: Prepare by compacting the top 8 inches of subgrade to 95 percent optimum density with moisture content between 2 percent below and 2 percent above optimum moisture density.

B. Sand Cushion: Place minimum 2 inch thick sand cushion on subgrade and compact.

3.03 FORMING

A. Place and secure forms to correct location, dimension, profile, and gradient. Set forms with upper edge true to line and grade held in place with stakes spaced maximum 48 inches on center.

B. Set forms to provide smooth surface water flow over finished walk or pad. Finished walks or pads shall not create ponding either on or behind finished walk or pad.

C. Assemble formwork to permit easy stripping and dismantling without damaging concrete.

D. Place joint filler vertical in position, in straight lines. Secure to formwork during concrete placement.

3.04 REINFORCEMENT

A. Place reinforcement as indicated on Drawings.

B. Place dowels to achieve pavement and curb alignment as indicated on Drawings.

3.05 PLACING CONCRETE

A. Place concrete in accordance with ACI 304R and ACI 302.1R.

B. Ensure reinforcement, inserts, embedded parts and formed joints are not disturbed during concrete placement.

C. Place concrete continuously over the full width of the panel and between predetermined construction joints. Do not break or interrupt successive pours such that cold joints occur.

D. After concrete placement, use strike-off guided by side forms to bring surface to proper level and consolidate. Correct irregularities.

E. Curing:
   1. Moisture cure sidewalk and pad surfaces in accordance with ACI 308.
   2. Start initial curing as soon as free water has disappeared from concrete surface after placing and finishing. Keep concrtete surfaces continually moist by water ponding, spraying or absorptive mat.
      a. Ponding: Maintain 100 percent coverage of water over concrete slab areas, continuously for 4 days.
      b. Spraying: Spray water over floor slab areas and maintain wet for 7 days.
      c. Absorptive Mat: Saturate burlap-polyethylene with water and place burlap-side down over floor slab areas, lapping ends and sides minimum 4 inches sealed with waterproof tape; maintain in place for 7 days.
   3. Begin final curing after initial curing but before surface is dry by absorptive mat.

3.06 JOINTS

A. Sidewalks:
   1. Align curb, gutter, and sidewalk joints.
   2. Divide surfaces into square areas using contraction joints spaced not more than the width of walk and maximum 10 feet on center, unless indicated otherwise on Drawings.

3. Place 3/8 inch wide expansion joints at 20 foot intervals and to separate walks from vertical surfaces and other components and in pattern indicated on Drawings.
    a. Form joints with joint filler extending from bottom of concrete to within 1/2 inch of finished surface.
    b. Secure to resist movement by wet concrete.
4. Provide scored joints:
    a. At 3 feet intervals.
    b. Between sidewalks and curbs.
5. Provide keyed construction joints as indicated on Drawings or when there is an interruption of concrete placement.
6. Saw cut contraction joints 3/16 inch wide at an optimum time after finishing. Cut 1/3 into depth of slab.

B. Pads:
1. Divide pad surfaces into square areas using contraction joints spaced not more than the width of pad and maximum 10 feet on center, unless indicated otherwise on Drawings.
2. Place 3/8 inch wide expansion joints at 20 foot intervals and to separate pads from vertical surfaces and other components and in pattern indicated on Drawings.
    a. Form joints with joint filler extending from bottom of concrete to within 1/2 inch of finished surface.
    b. Secure to resist movement by wet concrete.

3.07 HANDICAPPED RAMPS

A. Form, place and finish handicapped ramps in compliance with ADA, ANSI/ICC A117.1 and as indicated on Drawings.

3.08 FORMED CONCRETE STAIRS

A. Form concrete stairs as indicted on Drawings.

B. Place metal stair nosing at each tread as specified in Section 05 5516.

3.09 FINISHING

A. Non-Slip Broom: Immediately after float finishing, slightly roughen concrete suface by brooming with fiber-bristle broom perpendicular to main traffic route. Coordinate required final finish with Architect before application.

B. Edging: Finish sidewalk and pad edges, including those at formed joints, with edging tool having 1/4 inch radius. Edge transverse joints before brooming.

3.10 JOINT SEALING

A. Clean and prime joints, and install sealant in accordance with manufacturer's published instructions and ASTM C 1193.

B. Install sealant free of air pockets, foreign embedded matter, ridges, and sags.

3.11 CONSTRUCTION

A. Site Tolerances:
   1. Maximum Variation of Surface Flatness: 1/4 inch in 10 feet.

3.12 FIELD QUALITY CONTROL

B. Correct deficiencies in products and installation found not to be in compliance with Contract Documents.

3.13 PROTECTION

A. Immediately after placement, protect pavement from premature drying, excessive hot or cold temperatures, and mechanical injury.

B. Do not permit pedestrian traffic over site concrete for 7 days minimum after finishing.

---------- END OF SECTION ----------

PART 1 GENERAL

1.01 SUMMARY

A. Section Includes:
1. Concrete integral curbs and gutters.
2. Concrete curb handicapped ramps.

B. Related Documents:
1. The Contract Documents, as defined in the General Conditions **(EJCDC C-700 Standard General Conditions of the Construction Contract**), apply to the Work of this Section. Additional requirements and information necessary to complete the Work of this Section may be found in other documents.

C. Related Sections:
1. Section 31 2200 - Grading: Preparation of site for paving and base and preparation of subsoil at pavement perimeter for planting.
2. Section 31 2324 - Fill and Backfill: Compacted subbase for paving.
3. Section 32 1217 - Asphalt Concrete Pavement: Asphalt paving.
4. Section 32 1313 - Portland Cement Concrete Pavement: Concrete paving.
5. Section 32 1314 - Concrete Walks and Pads: Sidewalks, stoops and equipment pads.
6. Section 03 1000 - Concrete Forms and Accessories: Forms for site concrete.
7. Section 03 2000 - Concrete Reinforcement: Reinforcement for site concrete.
8. Section 03 3000 - Cast-In-Place Concrete: Concrete for sitework.
9. Section 07 9200 - Joint Sealers: Sealant for curb and gutter joints.

1.02 REFERENCES

A. Americans with Disabilities Act (ADA):
1. ADA; Americans with Disabilities Act; Federal Register, Volume 56, No. 144 28 CFR part 36.

B. American National Standards Institute (ACI):
1. ANSI/ICC A117.1 - American National Standard for Accessible and Useable Buildings and Facilities; International Code Council.

C. American Concrete Institute (ACI):
1. ACI 301 - Specifications for Structural Concrete for Buildings.
2. ACI 305R - Hot Weather Concreting.
3. ACI 306R - Cold Weather Concreting.

D. American Society for Testing and Materials (ASTM):
   1. ASTM D 1751 - Standard Specification for Preformed Expansion Joint Filler for Concrete Paving and Structural Construction (nonextruding and Resilient Bituminous Types).

1.03 SUBMITTALS

A. Submit as part of submittal for Section 03 3300.

1.04 QUALITY ASSURANCE

A. Perform work in accordance with ACI 301 standards.

B. Follow recommendations of ACI 305R when concreting during hot weather.

C. Follow recommendations of ACI 306R when concreting during cold weather.

1.05 PROJECT CONDITIONS

A. Environmental Requirements:
   1. Do not place concrete when base surface temperature is less than 40 degrees F, or surface is wet or frozen.

PART 2 PRODUCTS

2.01 FORM MATERIALS

A. Form Materials: Specified in Section 03 1000.

B. Wood or metal, clean, straight, of sufficient strength to resist springing during placement of concrete and of height equal to full depth of curb section.

2.02 REINFORCEMENT

A. Reinforcing: Specified in Section 03 2000 and indicated on Drawings.

2.03 CONCRETE MATERIALS

A. Concrete Materials: Specified in Section 03 3000.

B. Concrete Strength: Minimum compressive strength of 4,000 psi at 28 days with air-entraining admixture providing minimum 4 percent and maximum 6 percent air by volume.

2.04 ACCESSORIES

A. Joint Filler: ASTM D 1751 preformed; non-extruding bituminous type.
   1. Thickness: 1/2 inch.

B. Joint Sealer: Polyurethane; ASTM C 920, class 25, traffic grade, grey color.

PART 3 EXECUTION

3.01 EXAMINATION

A. Section 01 7300 - Execution Requirements: Verification of existing conditions before starting work.

B. Verification of Conditions: Verify that field measurements, surfaces, substrates and conditions are as required, and ready to receive work.

C. Report in writing to Architect and Owner's Representative prevailing conditions that will adversely affect satisfactory execution of the Work of this Section. Do not proceed with Work until unsatisfactory conditions are corrected.

D. By starting Work, Contractor accepts conditions and assumes responsibility for correcting unsuitable conditions encountered at no additional cost to Owner.

3.02 PREPARATION

A. Subgrade: Prepare subgrade to uniform composition and compaction of material as specified in Section 31 2200.

B. Establish lines and grades indicated for curbs and gutters using line and grade stakes.

C. Remove impounded water and debris from forms before placing concrete.

D. Wet wood forms before placing concrete.

3.03 FORMING

A. Place and secure forms to correct location, dimension, profile, and gradient as indicated on Drawings.

B. Assemble formwork to permit easy stripping and dismantling without damaging concrete.

C. Place joint filler vertical in position, in straight lines. Secure to formwork during concrete placement.

3.04 REINFORCEMENT

A. Place reinforcement as indicated on Drawings.

B. Place dowels to achieve pavement and curb alignment as detailed.

3.05 PLACING CONCRETE

A. Place concrete as specified in Section 03 3000.

B. Ensure reinforcement, inserts, embedded parts and formed joints are not disturbed during concrete placement.

C. Place concrete continuously over the full width of the panel and between predetermined construction joints. Do not break or interrupt successive pours such that cold joints occur.

3.06 JOINTS

A. Align curb, gutter, sidewalk and paving joints.

B. Place 1/2 inch wide expansion joints at indicated intervals and to separate curbs and gutters from vertical surfaces and other components.
   1. Space joints at maximum 30 foot intervals.
   2. Form joints with joint filler extending from bottom of pavement to within 1/2 inch of finished surface.
   3. Secure to resist movement by wet concrete.

C. Form control or contraction joints at two times the curb section thickness in inches (i.e. 2 x 5 inches equals 10 feet). Maximum spacing 15 feet.

D. Provide joints in locations to aid and control cracking. Complete joints before uncontrolled shrinkage cracking occurs.

3.07 HANDICAPPED RAMPS

A. Form, place and finish handicapped ramps in compliance with ANSI/IIC A117.1, ADA and as indicated on Drawings.

3.08 FINISHING

A. Light broom; curb and flow lines of gutters finished by use of steel trowel to contour of required grades and then cross brushed.

3.09 CONSTRUCTION

A. Site Tolerances:
   1. Maximum Variation of Surface Flatness: 1/4 inch in 10 feet.

3.10 FORM REMOVAL

A. Keep forms in place minimum 12 hours after placing concrete.

B. Do not use bars of heaving tools against concrete when removing forms.

C. Remove and repair defective concrete as specified in Section 03 3000.

3.11 FIELD QUALITY CONTROL

A. Section 01 4500 - Quality Control: Contractor Quality Control Representative shall perform contractor quality control inspections.

1. Inspect curb and gutter installation, type, dimensions, thickness and finish.
2. Document preparatory, initial and follow-up inspection in Contractor Test and Inspection Reports and submit to Architect.

B. Section 01 4500 - Testing Laboratory Services: Independent testing agency will perform concrete tests as specified in Section 03 3000.

C. Correct deficiencies in products and installation found not to be in compliance with Contract Documents.

3.12 PROTECTION

A. Immediately after placement, protect concrete from premature drying, excessive hot or cold temperatures, and mechanical injury.

B. Do not permit pedestrian traffic over concrete for 7 days minimum after finishing.

---------- END OF SECTION ----------

----------THIS PAGE LEFT INTENTIONALLY BLANK----------

PART 1 GENERAL

1.01 SUMMARY

A. Section Includes:
1. Driveway and parking lot striping.
2. Painted pavement markings at handicapped parking stalls.
3. Pavement Markings Schedule, at end of Section.

B. Related Documents:
1. The Contract Documents, as defined in the General Conditions **(EJCDC C-700 Standard General Conditions of the Construction Contract**) apply to the Work of this Section. Additional requirements and information necessary to complete the Work of this Section may be found in other documents.

C. Related Sections:
1. Section 32 1216 - Asphalt Concrete Paving: Paving substrate for marking application.
2. Section 32 1313 - Portland Cement Concrete Pavement: Paving substrate for marking application.

1.02 REFERENCES

A. Americans with Disabilities Act (ADA):
1. ADA - Americans with Disabilities Act; Federal Register, Volume 56, No. 144 28 CFR part 36.

B. American National Standards Institute (ANSI):
1. ANSI/ICC A117.1 - American National Standard for Accessible and Useable Buildings and Facilities; International Code Council.

C. U.S. General Services Administration (GSA):
1. GSA FS TT-P-115E - Traffic Paint.

1.02 SUBMITTALS

A. Section 01 3300 - Submittal Procedures: Requirements for submittals.
1. Product Data: Technical data sheets indicating manufacturer's catalog number, paint type description, and VOC content.

B. Section 01 7800 - Closeout Submittals: Requirements for closeout submittals.
1. Installation Certification: Submit written certification of installation on form located at end of Section.

1.03 QUALITY ASSURANCE

A. Application Qualification: Provide qualified technician to superive equipment and application of marking.

B. Regulatory Requirements:
   1. Provide paint and coating materials that conform to Federal, State, and Local restrictions for Volatile Organic Compounds (VOC) content.

C. Manufacturer Installation Instructions: Contractor shall maintian current copy of pavement marking paint manufactuer published installation instructions in Project Field Office and refer to instructions at all times during installation.

1.04 DELIVERY, STORAGE, AND PROTECTION

A. Section 01 6200 - Product Requirements: Deliver, store, protect and handle products.

B. Deliver products to site in sealed and labeled containers; inspect to verify acceptability.

C. Container Label: Include manufacturer's name, type of paint, brand name, lot number, brand code, coverage, surface preparation, drying time, cleanup requirements, color designation, and instructions for mixing and reducing.

D. Deliver Material Safety Data Sheet (MSDS) for each material to Project Field Superintendent for Contractor Records.

E. Accept Products on site in manufacturer’s packaging. Inspect for damage. Return damaged Products and replace with undamaged Products.

F. Project Field Superintendent shall inspect Products immediately upon delivery to Project Site, determine Product conformance with specified requirements and reject Products not complying with specifications. Project Field Superintendent shall direct that non-complying Products be removed from Project Site immediately.

G. Paint Materials: Store at minimum ambient temperature of 45 degrees F and a maximum of 90 degrees F, in ventilated area, and as required by manufacturer's instructions.

1.05 ENVIRONMENTAL REQUIREMENTS

A. Do not apply materials when surface and ambient temperatures are outside the temperature ranges required by the paint product manufacturer.

B. Do not apply exterior coatings during rain or snow, or when relative humidity is outside the humidity ranges required by the paint product manufacturer.

PART 2 PRODUCTS

2.01 MANUFACTURERS

A. Aexcel Corporation: www.aexcelcorp.com.

B. Ennis Paint, Incorporated: www.ennispaint.com

C. Trantex, Incorporated: www.trantexinc.com.

D. Section 01 6200 - Product Requirments: Product options and substitutions. Substitutions: Permitted.

2.02 TRAFFIC PAINT

A. Chlorinated Rubber VOC Compliant Zone Marking Paint conforming to GSA FS TT-P-115E Type III, white, yellow, blue or red, lead free.

B. Application Dry Film Thickness (DFT): 15 mils.

C. Drying Time: 15 minutes at 77 degrees F.

D. Application Equipment: Airless spray.

PART 3 EXECUTION

3.01 EXAMINATION

A. Section 01 7300 - Execution Requirements: Verification of existing conditions before starting work.

B. Verification of Conditions: Verify that field measurements, surfaces, substrates and conditions are as required, and ready to receive Work.
   1. Verify that surfaces are ready to receive Work as instructed by the product manufacturer.

C. Report in writing to Architect prevailing conditions that will adversely affect satisfactory execution of the Work of this Section. Do not proceed with Work until unsatisfactory conditions have been corrected.

D. By beginning Work, Contractor accepts conditions and assumes responsibility for correcting unsuitable conditions encountered at no additional cost to the Owner.

3.02 PREPARATION

A. Remove dust, dirt and other granular surface deposits by sweeping, blowing with compressed air, rinsing with water, or a combination of these methods.

B. Remove rubber deposits, residual curing compounds and other coatings adhering to pavement by water blasting.

C. Allow new paving to cure for minimum 30 days before application of pavement markings.

D. Testing for Moisture: Test pavement surface for moisture before beginning marking application after each peroid of rainfall, fog, high humidity, or cleaning, or when ambient temperature has fallen below dew point.
   1. Plastic Wrap Test Method:
      a. Cover pavement with 12 inch x 12 inch section of clear plastic wrap and seal edges with tape.
      b. After 15 minutes, examine plastic wrap for any visible moisture accumulation inside plastic.
      c. Do not begin pavement marking until test can be performed with no visible moisture accumulation inside plastic wrap.

E. Layout pavement markings using guide lines, templates and forms.

F. Clean, test and check application equipment for proper film thickness and adjust pressure or speed to obtain specified mil thickness and uniform line thickneess.

G. Protect adjacent curbs, walks, fences and other items from pavment marking application.

3.03 APPLICATION

A. Apply products in accordance with manufacturer's instructions using application procedures approved for application and substrate.

B. Do not apply finishes to surfaces that are not dry and if rain is expected within 24 hours.

C. Apply materials at not less than manufacturer’s recommended spreading rate. Provide minimum dry film thickness (DFT) of entire coating system as specified.

D. Apply stripes straight and even with sharp edges.

E. Apply stripes and other markings in widths and colors indicated in Schedule.

3.04 CLEANING AND PROTECTION

A. Remove overspray, spills, or drips from surfaces.

B. Barricade marked areas unitl marking paint is dry and ready for traffic.

3.05 WASTE DISPOSAL

A. Dispose of all paint and related materials in conformance with all State and local environmental and waste disposal regulations at approved waste disposal location.

3.06 FIELD QUALITY CONTROL

A. Section 01 4500 - Quality Control: Perform contractor quality control inspections.
   1. Inspect pavement marking application for material, color, sheen, specified mil thickness, coverage, dimensions and layout.
   2. Document preparatory, initial and follow-up inspection in Contractor Test and Inspection Reports and submit to Architect.

B. Correct deficiencies in products and installation found not to be in compliance with Contract Documents.

3.07 SCHEDULE - PAVEMENT MARKINGS

A. Paint the following items at locations and spacings indicated on Drawings.

B. Parking Stall Stripping: 4 inch wide, White.

B. Parking Stall Stripping: 4 inch wide, Yellow.

C. Directional Arrows and Graphics: White, size and configuration as indicated on Drawings.

C. Directional Arrows and Graphics: Yellow, size and configuration as indicated on Drawings.

D. Handicapped Parking Stall Striping: 4 inch wide with diagonals where indicated, International Handicapped Blue in accordance with ADA and ANSI/ICC A117.1.

D. Handicapped Parking Stall Striping: 4 inch wide with diagonals where indicated, International Handicapped Blue in accordance with ADA and Oklahoma.

E. Handicapped Parking Stall Symbol: International Symbol of Accessibility, white graphic on 36 inch x 36 inch on International Handicapped Blue background in accordance with ADA and ANSI/ICC A117.1.

E. Handicapped Parking Stall Symbol: International Symbol of Accessibility, white graphic on 36 inch x 36 inch on International Handicapped Blue background in accordance with ADA and ANSI/ICC A117.1 and Oklahoma.

F. Curbs Marked as Fire Lane: Paint curbs red with white text markings NO PARKING FIRE LANE (Or as directed by Authorities Having Jurisdiction).

---------- END OF SECTION ----------

PAVEMENT MARKINGS INSTALLATION CERTIFICATION

PROJECT: _____

LOCATION: _____

ARCHITECT'S PROJECT NUMBER: _____

OWNER: _____

CONTRACTOR: _____

PAVEMENT MARKINGS APPLICATOR:

Name: _____

Address: _____

Telephone Number: _____

UPON COMPLETION OF APPLICATION PAINT APPLICATOR CERTIFIES THAT:

1. Applicator obtained a current copy of the manufacturer's published surface preparation and traffic paint application instructions for the specific surface and product being applied.
2. Applicator reviewed and discussed manufacturer's published surface preparation and traffic paint application instructions and requirements with Project Field Superintendent before start of application.
3. Applicator checked moisture content of substrates and found them in compliance with specified requirements.
4. Installer applied specified traffic paint in accordance with the Contract Documents.
5. Applicator applied traffic paint to dry film thickness (DFT) in compliance with specified requirements.

EXECUTED AND DELIVERED this _____ day of _____, 20___ .

_____
(company name)

BY: _____
(authorized signature)

Subscribed and sworn to before me this _____day of _____, 20___.

_____
Notary Public

_____ Affix Seal
My Commission expires:

END OF CERTIFICATION

PART 1 - GENERAL

1.01 DESCRIPTION

A. This Section specifies requirements for soil amendments, seeding, and sodding for site landscape areas.

B. The work includes:

1. Amendments to topsoil.
2. Seeding, sodding, and mulching.
3. Maintenance of seeded and sodded areas.

1.02 RELATED SECTIONS

A. Sections which directly relate to the work of this Section include:

1. Section 31 2500 - EROSION AND SEDIMENTATION CONTROLS.
2. Section 31 2316 – EXCAVATION AND EMBANKMENT.

1.03 SUBMITTALS

A. Manufacturers Product Data

1. Submit material specifications and installation instructions where applicable attesting that the following materials meet the requirements specified:

a. Soil Amendments
b. Seed
c. Sod

B. Soil Test Reports

1. Minimum one month prior to ordering, importing, spreading or amending the topsoil, submit soil test report to the Landscape Architect for review and approval.

Do not order materials until the Landscape Architect's approval has been obtained. Delivered materials shall closely match the approved samples.

a. Secondary testing of topsoil samples may be required to verify the amount of soil amendment that will be required in order to bring pH levels, percentage of organic matter, and other levels of nutrients within the recommended range without raising soluble salts and other nutrients and micronutrients to toxic levels.

This testing will be done as directed by soil test labs to samples of the topsoil with varying amounts of amendments added to each sample and resubmitted to the soil testing agency. Written report of secondary testing with recommendations shall be submitted prior to amendments being added to the topsoil on site. Landscape Architect is to review and approve recommendations.

C. Certificates

1. The seed vendor's Certificate of Compliance and invoice showing quantity for each grass seed mixture stating botanical and common name, percentage by weight, percentages of purity, weed content, germination of the seed, the net weight of seed, and date of shipment. No seed shall be sown until the Contractor has submitted these certificates.

D. Planting Schedule

Indicating anticipated planting dates for each type of seed/sod.

E. Maintenance Manual

1. The Contractor shall submit a written manual prepared for the Owner that outlines a schedule for procedures to be established by Owner for maintenance of lawns during the calendar year for seeded and/or sodded lawns. This maintenance schedule should include timing and methods for mowing, watering, aeration, fertilization, liming, and other lawn maintenance operations.

F. Submittal Schedule

1. Before installation:

a. Manufacturer's product data for seed and sod.
b. Soil test reports.
c. Seed certification.
d. Hydroseed mix.

2. After installation and before acceptance:

a. Maintenance Manual.

1.04 QUALITY ASSURANCE

A. All work shall be performed by personnel experienced in lawn installation under the full time supervision of a qualified foreman.

B. Work shall be coordinated with all other trades on site.

1.05 DELIVERY, STORAGE, AND HANDLING

A. Deliver material to the site in original unopened packages, showing weight, manufacturer's name, and guaranteed analysis.

B. Store materials in a manner that their effectiveness and usability will not be diminished or destroyed. Materials shall be uniform in composition, dry, unfrozen, and free flowing. Any material which has become caked or otherwise damaged or which does not meet specified requirements will be rejected.

1.06 SEEDING

A. MATERIALS

1. Seed: The kinds of grass, legume, and cover-crop seed furnished shall be those stipulated in the specifications. Seed shall conform to the requirements of Fed. Spec. JJJ-S-181.

2. Seed shall be furnished separately or in mixtures in standard containers with the seed name, lot number, net weight, percentages of purity and of germination and hard seed and percentage of maximum weed seed content clearly marked for each kind of seed.

The Contractor shall furnish the Engineer duplicate signed copies of a statement by the Vendor certifying that each lot of seed has been tested by a recognized laboratory for seed testing within 6 months of date of delivery. This statement shall include: name and address of laboratory, date of test, lot number for each kind of seed and the results of tests as to name, percentages of purity and of germination, percentage of weed content for each kind of seed furnished and in case of a mixture, the proportions of each kind of seed.

Bermuda	40 lbs./acre (unhulled)
Ryegrass	20 lbs./acre
Vetch	5 lbs./acre
Fescue	15 lbs./acre
Wheat	40 lbs./acre

3. Mulch: Mulch consisting of wheat straw hay shall be broadcast over the entire area to be seeded. Said broadcasted material shall be of approximately 1” thick and sufficiently cover the ground. Cost of mulch shall be included in the cost of seeding. Mulch is required on all slopes steeper than 10:1.

4. Fertilizer: Fertilizer application shall be at the rate of 400 pounds 13-13-13 (181.44 kilograms) per acre. Fertilizer shall be standard commercial fertilizers supplied separately or in mixtures containing the percentages of total nitrogen, available phosphoric acid, and water-soluble potash. They shall be applied at the rate and to the depth specified in the special provisions, and shall meet the specified requirements of the applicable State and Federal laws. They shall be furnished in standard containers with name, weight and guaranteed analysis of contents clearly marked thereon. No Cyanamid compounds or hydrated lime shall be permitted in mixed fertilizers.

5. The fertilizers may be supplied in one of the following forms:
(a) A dry, free-flowing fertilizer suitable for application by a common fertilizer spreader;
(b) A finely-ground fertilizer soluble in water, suitable for application by power sprayers;
(c) A granular or pellet form suitable for application by blower equipment.

6. Soil for Repairs: The soil for fill and topsoiling of areas to be repaired shall be at least of equal quality to that which exists in areas adjacent to the area to be repaired.

The soil shall be relatively free from large stones, roots, stumps or other materials that will interfere with subsequent sowing of seed, compacting and establishing turf, and shall be approved by the Engineer before being placed.

B. CONSTRUCTION METHODS

1. Advance Preparation and Cleanup: After grading of areas has been completed and before applying fertilizer, areas to be seeded shall be raked or otherwise cleared of stones larger than 2 inches in any diameter, sticks, stumps and other debris which might interfere with sowing of seed, growth of grasses or subsequent maintenance of grass-covered areas. If any damage by erosion or other causes has occurred after the completion of grading and before beginning the application of fertilizer, the Contractor shall repair such damage. This may include filling gullies, smoothing irregularities and repairing other incidental damage.

2. An area to be seeded shall be considered a satisfactory seedbed without additional treatment if it has recently been thoroughly loosened and worked to a depth of not less than 5 inches as a result of grading operations and, if immediately prior to seeding, the top 3 inches of soil is loose, friable, reasonably free from large clods, rocks, large roots or other undesirable matter, and if shaped to the required grade.

3. However, when the area to be seeded is sparsely sodded, weedy, barren and un-worked, or packed and hard, any grass and weeds shall first be cut or otherwise satisfactorily disposed of, and the soil then scarified or otherwise loosened to a depth not less than 5 inches. Clods shall be broken and the top 3 inches of soil shall be worked into a satisfactory seedbed by disking or by use of culti-packers, rollers, drags, harrows, or other appropriate means.

4. Dry Application Method:

(a) Fertilizing: Following advance preparations and cleanup, and liming if. required, fertilizer shall be uniformly spread at the rate which will provide not less than the minimum quantity stated in the special provisions.

(b) Seeding: Grass seed shall be sown at the rate specified on the plans or in the special provisions immediately after fertilizing, and the fertilizer and seed shall be raked within the depth range stated in the special provisions. Seeds of legumes, either alone or in mixtures, shall be inoculated before mixing or sowing, in accordance with the instructions of the manufacturer of the inoculants. When seeding is required at other than the seasons shown on the plans or in the special provisions, a cover crop shall be sown by the same methods required for grass and legume seeding.

(c) Rolling: After the seed has been properly covered, the seedbed shall be immediately compacted by means of an approved lawn-roller, weighing 40 to 65 pounds per foot of width for clay soil (or any soil having a tendency to pack), and weighing 150 to 200 pounds per foot of width for sandy or light soils.

5. Wet Application Method:

(a) General: The Contractor may elect to apply seed and fertilizer by spraying them on the previously prepared seedbed in the form of an aqueous mixture and by using the methods and equipment described herein. The rates of application shall be as specified in the special provisions.

(b) Spraying Equipment: The spraying equipment shall have a container or water tank equipped with a liquid level gauge calibrated to read in increments not larger than 50 gallons over the entire range of the tank capacity, mounted so as to be visible to the nozzle operator. The container or tank shall also be equipped with a mechanical power-driven agitator capable of keeping all the solids in the mixture in complete suspension at all times until used.

The unit shall also be equipped with a pressure pump capable of delivering 100 gallons per minute at a pressure of 100 pounds per square inch. The pump shall be mounted in a line, which will re-circulate the mixture through the tank whenever it is not being sprayed from the nozzle. All pump passages and pipelines shall be capable of providing clearance for 5/8-inch solids. The power unit for the pump and agitator shall have controls mounted so as to be accessible to the nozzle operator. There shall be an indicating pressure gauge connected and mounted immediately at the back of the nozzle.

The nozzle pipe shall be mounted on an elevated-supporting stand in such a manner that it can be rotated through 360 degrees horizontally and inclined vertically from at least 20 degrees below to at least 60 degrees above the horizontal.

There shall be a quick-acting, three-way control valve connecting the re-circulating line to the nozzle pipe and mounted so that the nozzle operator can control and regulate the amount of flow of mixture delivered to the nozzle. At least three different types of nozzles shall be supplied so that mixtures may be properly sprayed over distance varying from 20 feet to 100 feet. One shall be a close-range ribbon nozzle, one a medium-range ribbon nozzle, and one a long-range jet nozzle. For case of removal and cleaning, all nozzles shall be connected to the nozzle pipe by means of quick-release couplings.

In order to reach areas inaccessible to the regular equipment, an extension hose at least 50 feet in length shall be provided to which the nozzles may be connected.

(c) Mixtures: Seed and fertilizer shall be mixed together in the relative proportions specified, but not more than a total of 220 pounds of these combined solids shall be added to and mixed with each 100 gallons of water.

All water used shall be obtained-from fresh water sources and shall be free from injurious chemicals and other toxic substances harmful to plant life. Brackish water shall not be used at any time. The Contractor shall identify to the Engineer all sources of water at least 2 weeks prior to use. The Engineer may take samples of the water at the source or from the tank at any time and have a laboratory test the samples for chemical and saline content. The Contractor shall not use any water from any source, which is disapproved by the Engineer following such tests.

All mixtures shall be constantly agitated from the time they are mixed until they are finally applied to the seedbed. All such mixtures shall be used within 2 hours from the time they were mixed or they shall be wasted and disposed of at locations acceptable to the Engineer.

(d) Spraying: Mixtures of seed and fertilizer shall only be sprayed upon previously prepared seedbeds. The mixtures shall be applied by means of a high-pressure spray which shall always be directed upward into the air so that the mixtures will fall to the ground like rain in a uniform spray. Nozzles or sprays shall never be directed toward the ground in such a manner as might produce erosion or runoff.

Particular care shall be exercised to insure that the application is made uniformly and at the prescribed rate and to guard against misses and overlapped areas. Proper predetermined quantities of the mixture in accordance with specifications shall be used to cover specified sections of known area. Checks on the rate and uniformity of application may be made by observing the degree of wetting of the ground or by distributing test sheets of paper or pans over the area at intervals and observing the quantity of material deposited thereon.

On surfaces, which are to be mulched as indicated by the plans or designated by the Engineer, seed and fertilizer applied by the spray method need not be raked into the soil or rolled. However, on surfaces on which mulch is not to be used, the raking and rolling operations will be required after the soil has dried.

Maintenance of Seeded Areas: The Contractor shall protect seeded areas against traffic or other use by warning signs or barricades, as approved by the Engineer. Surfaces gullied or otherwise damaged following seeding shall be repaired by re-grading and reseeding as directed. The Contractor shall mow, water as directed, and otherwise maintain seeded areas in a satisfactory condition until final inspection and acceptance of the work.

When either the dry or wet application method outlined above is used for work done out of season, it will be required that the Contractor establish a good stand of grass of uniform color and density to the satisfaction of the Engineer.

If at the time when the contract has been otherwise completed it is not possible to make an adequate determination of the color, density and uniformity of such stand of grass, payment for the unaccepted portions of the areas seeded out of season will be withheld until such time as these requirements have been met.

C. WATERING

(a) Sprigged areas shall be watered as necessary to insure growth and a good stand of Bermuda Grass. Watering shall continue every other day for 10 watering days at a minimum.

1.07 SODDING

A. PREPARATION OF AREAS TO BE SODDED

1. Preparation of areas to be sodded shall include filling and reshaping eroded areas, cleaning ditches, and finishing slopes to establish the proper grading section.

2. The sod beds shall be free of weeds when planted. The sod beds shall consist of a permeable but firm layer of surface soil at least three inches thick. Either hard compact or loose sprig beds are unsuitable. The sod beds shall be reasonably free from hard clods more than one inch in diameter. The surface shall be scarified just prior to the planting operation, with a spike tooth harrow or an equivalent piece of equipment. The depth and spacing of furrows made by the scarification shall cause most of the sods, when applied, to rest approximately one-half inch below the soil surface.

3. The kind and degree of soil tillage necessary to prepare satisfactory sod beds will depend on the type and condition of the soil; loose soils may require watering, rolling and harrowing; some sandy soils may require harrowing only; heavy clay soils may require tillage with heavy disc plows, a stubblemunching plow or a sub-soiling plow followed by rolling and harrowing.

B. SOIL MOISTURE

1. Advance soil moisture in a quantity sufficient to obtain a rapid growth of Bermuda, shall exist or be incorporated to a depth of 4 inches before Bermuda sod is spread.

C. APPLICATION

1. Bermuda grass sodding shall be provided in 18" X 24" sections. The entire area to be sodded shall be covered with the 18" X 24" sections of Bermuda Grass. The mats shall be placed in line adjacent to each other, with 1/2" gap between sections of sod. Care shall be taken to smooth the new sod into the same grade as the existing sod.

D. WATERING

1. Sodded areas shall be watered as necessary to insure growth and a good stand of Bermuda Grass. Watering shall continue every other day for 10 watering days.

E. FERTILIZER APPLICATION

1. Fertilizer application shall be at the rate of 400 pounds 13-13-13 (181.44 Kilograms) per acre.

2. The fertilizer shall be applied before the seeds are planted and then incorporated in the soil by disking.

1.08 INSPECTION FOR ACCEPTANCE

A. Conditions of Acceptance

1. Acceptance shall be given for the entire portion of the lawn areas. No partial acceptance will be given.
2. Lawns shall exhibit a uniform, thick, well-developed stand of grass. Lawn areas shall have not bare spots in excess of four inches in diameter and bare spots shall comprise no more than 2% of the total area of the lawn.
3. Lawn areas shall not exhibit signs of damage from erosion, washouts, gullies, or other causes.
4. Pavement surfaces and site improvements adjacent to lawn areas shall be clean and shall be free of spills or overspray from placing or handling of topsoil and seeding operations.

B. Inspection and Acceptance

1. Upon written request of the Contractor, the Engineer/ Landscape Architect will inspect all lawn areas to determine completion of work. This request must be submitted at least five days prior to the anticipated inspection date.

2. If the lawn areas are not acceptable, the Engineer/ Landscape Architect will indicate corrective measures to be taken, and shall extend the maintenance period as necessary for the completion of the work.
   The Contractor shall request a second inspection of the lawns after corrective measures have been accomplished. This process shall be repeated until the total lawn area being inspected is acceptable.
3. When the lawn areas are acceptable, a meeting of the Contractor and Owner's Representative will be arranged to accept the lawn work. A final inspection will be a part of this meeting.
   At this meeting, the Contractor shall be furnished with a written acceptance of the lawn section being approved. The Contractor shall turn over maintenance of the lawn areas to the Owner after the acceptance of the lawn in writing.
4. Following the acceptance of lawns, the Contractor shall provide the Owner with access to all lawn areas as required for the Owner's maintenance work.

C. Site Cleanup

1. The Contractor shall leave the site in a clean and neat condition. Final acceptance will not be granted until this condition is met.

PART 2 - PRODUCTS

2.01 TOPSOIL

A. Topsoil shall be approved by the Engineer.

2.02 SOIL CONDITIONING MATERIALS

A. Apply conditioning materials in accordance with the recommendations of soil testing laboratory as noted in report.

B. Fertilizer: Fertilizer shall conform to state and federal fertilizer laws. The fertilizer shall be uniform in composition, dry and free flowing, and shall be delivered to the site in the original, unopened containers, each bearing the manufacturer's guaranteed analysis. Any fertilizer which becomes caked or otherwise damaged, making it unsuitable for use, will not be accepted.

1. At least 50% by weight of the nitrogen contents of the fertilizer shall be derived from organic sources. A minimum of 35% of the nitrogen shall be water insoluble.
2. Fertilizer shall contain not less than percentage of weight of ingredients as recommended by in soil test report.

C. Compost is to be well-composted, stable, and weed-free organic matter, pH range of 5.5 to 7; moisture content 35 to 55 percent by weight; 100 percent passing through $^{1}/_{2}$-inch sieve; soluble salt content of 5 to 10 decisiemens/m; not exceeding 0.5 percent inert contaminants and free of substances toxic to plantings; and as follows:

a. Organic matter content: 50 to 60 percent of dry weight.
b. Feedstock: Agricultural, food, or industrial residuals; biosolids; yard trimmings; or source-separated or compostable mixed solid waste.

2.03 WATER

A. Water shall be furnished by the Contractor, suitable for irrigation, and free from ingredients harmful to plant life. Hoses and other watering equipment required for the work shall be furnished by the Contractor.

2.04 SEED

A. Certified seed will be used for all permanent seeding whenever possible.

B. Selection of plant materials is based on climate, topography, soils, land use, and planting season.

C. Refer to drawings for seed mixture and rates.

2.05 SOD

A. Sod used shall be state certified. This ensures genetic purity, high quality, freedom from noxious weeds and excessive insect or disease problems.

B. Provide sod in lieu of seed in low areas subject to surface drainage.

C. Sod shall be machine cut at a uniform thickness of 3/4 inch (plus or minus 1/4 inch) at the time of cutting. This thickness shall exclude shoot growth and thatch.

D. Pieces of sod shall be cut to the supplier's standard width and length, with a maximum allowable deviation in any dimension of 5%. Torn or uneven pads will not be accepted.

E. Standard size sections of sod shall be strong enough to support their own weight and retain their size and shape when suspended from a firm grasp on one end of the section.

F. Sod shall not be cut or laid in excessively wet or dry weather.

G. Sod shall be harvested, delivered, and installed within a period of 36 hours.

H. Refer to drawings for seed mix to be used for sod type.

2.06 MULCH

A. Organic Mulch

1. Organic mulch may be used in any area where mulch is required.
2. Select mulch materials based on site requirements, availability of materials, and availability of labor and equipment. Other materials, such as peanut hulls and cotton burs, may be used with permission of the local plan-approving authority.
3. Straw mulch shall be stalks from oats, wheat rye, barley or rice that are free from noxious weeds, chemicals, mold or other objectionable materials with a nonasphaltic mulch tackifier. Straw shall be air-dry condition suitable for placing. Straw supplied for mechanical application shall be chopped.

2.07 SOIL STABILIZATION BLANKETS AND MATTING

A. Matting for erosion control shall be provided.

2.08 HYDROSEED MIX

A. The Contractor shall submit a certified statement as to number of lbs. of fertilizer, amounts and types of grass seed, and processed fiber, per 100 gallons of water.

1. Mulch for hydroseeding shall be supplied for use with hydraulic application of grass seed and fertilizer. It shall consist of Futerra F4 Netless by Profile Products LLC or approved equal.
2. Non-asphaltic tackifier: colloidal tackifier recommended by fiber-mulch manufacturer for slurry application; nontoxic and free of plant growth of germination inhibitors.

PART 3 – EXECUTION

3.01 SEED AND SOD BED PREPARATION

A. Coordinate planting with placement of topsoil, the installation of the irrigation system and with other contractors as the landscape contractor is required to install and maintain his finished work at his expense. When conditions detrimental to lawn establishment, growth and maintenance are encountered, such as rubble fill, adverse drainage conditions of obstructions, notify the owner's representative before beginning work.

B. Topsoil is to be loose, in friable condition. If topsoil has become crusty, hardened or eroded since being spread, it shall be a part of this work to restore the soil to the loose condition described above.
Add soil amendments as recommended in soil test report and thoroughly mix into the upper 4" of topsoil. Remove any rocks or other debris which may surface and work all areas to a smooth even surface free from irregularities, ridges, or depressions. Prepared areas shall meet required finish grade elevations and shall drain adequately. Repair washed and eroded portions. Moisten prepared areas if soil is dry. Water thoroughly, then allow the surface moisture to evaporate. Do not create muddy conditions.

C. Unless otherwise specified, seed operations shall be performed at the times specified on the drawings. Seed and sod operations shall not be performed when the ground is frozen or when soil or weather conditions would prevent proper soil preparation and subsequent operations. Do not seed when wind velocity exceeds 5 miles per hour. Sow seed with spreader or seeding machine. Distribute seed evenly over entire area by sowing equal quantity in two directions at right angles to each other. Rake seed lightly into top $^{1}/_{4}$" of soil, firm entire area with a roller not exceeding 90 lbs. per foot or roller width, and water with a fine spray. Unless indicated otherwise on the drawings, protect newly seeded areas by spreading mulch to a uniform and continuous depth of 1-1/2" loose measurement (70-90 lbs/1000 SF).

D. When hydroseeding is performed, nozzles or sprays shall not be directed toward the ground in a manner that will cause erosion or runoff. The Contractor shall notify the Engineer/ Landscape Architect at least 48 hours prior to beginning seed operations.

3.02 HYDROSEED BED PREPARATION

A. Prepare seed bed for hydroseeding the same as for seeding and sodding, but do not incorporate fertilizer into the top 3 inches of topsoil.

B. Hydroseeding shall be applied with a spray machine designed for this purpose and approved by the Engineer.

C. Install mulch per manufacturer's recommendations using manufacturer's biodegradable staples.

D. Mix specified seed, starter fertilizer, and fiber mulch in water using equipment specifically designed for hydroseed application. Continue mixing until uniformly blended into homogeneous slurry suitable for hydraulic application.

E. Apply slurry uniformly to all areas to be seeded in a two-step process. Apply first slurry coat at a rate so that mulch component is deposited at not less than 500 lb/ Acre dry weight, and seed component is deposited not less than the specified seed-sowing rate. Apply slurry cover coat of fiber mulch at the rate recommended by the manufacturer for the steepest area of slope.

3.03 LAWN RENOVATION

A. Renovate existing lawn where disturbed or damaged.

B. Renovate existing lawn damaged by Contractor's operations, such as storage of materials or equipment and movement of vehicles.

C. Renovate Lawn where settlement or washouts occur or where minor regrading is required.

D. Remove sod and vegetation from diseased or unsatisfactory lawn areas; do not bury in soil.

E. Remove topsoil containing foreign materials resulting from Contractor's operations, including oil drippings, fuel spills, stone, gravel, and other construction materials, and replace with new topsoil.

F. Mow, dethatch, core aerate, and rake existing lawn.

G. Remove weeds before installing seed. Where weeds are extensive, apply selective herbicides as required. Do not use pre-emergence herbicides.

H. Remove waste and foreign materials, including weeds, soil cores, grass, vegetation, and turf, and legally dispose of them off Owner's property.

I. Till stripped, bare, and compacted areas thoroughly to a soil depth of 6 inches.

J. Apply soil amendments and initial fertilizers required for establishing new lawns and mix thoroughly into top four inches of existing soil. Provide new planting soil to fill low spots and meet finish grades.

K. Apply seed as required for new lawns.

L. Water newly planted areas and keep moist until new lawn is established.

3.04 MAINTENANCE AND PROTECTION

A. Maintenance of seeded and sodded areas shall begin immediately after installation. Maintenance includes watering, weeding, mowing and edging, reseeding, replacement of dead sod, disease and insect pest control, repair of all erosion damage, and any other procedures consistent with good horticultural practice, required to ensure normal, vigorous, and healthy growth. Maintenance shall continue until final acceptance of the work.

1. Landscape contractor is responsible to determine water application rates.
2. Stands in lawn areas shall be mowed whenever the average height reaches 2-2-1/2" for cool season grasses.

B. Maintenance shall also include all temporary protection fences, barriers, signs, and all other work incidental to proper maintenance. Maintain barricades throughout maintenance period and remove after lawn is established.

C. Scattered bare spots will be allowed up to a maximum of 2% of any lawn area, provided none are larger than 72 square inches. After the grass has sprouted, all bare areas shall be re-seeded or re-sodded repeatedly until all areas are covered with a satisfactory growth of grass.
Do not remove more than one-third of the grass blade. All lawns shall receive at least three mowings before acceptance.

D. The seeded and sodded areas shall be maintained in a continuous moist condition, satisfactory for good germination and growth of grass until acceptance.

E. Six weeks after the seeded areas have become established, fertilizer shall be applied over the entire area. Sod shall be fertilized at the time of the second mowing.

F. Remove erosion-control measures after grass establishment period.

G. Clean-up and protection

1. Keep pavements and work area in a clean and orderly condition on a daily basis.
2. Protect seeded areas and materials from damage due to operations by other contractors, trades, and trespassers. Maintain protection during installation and until final acceptance. Treat, repair, or replace damaged seeded areas as directed.

3.05 WARRANTY

A. The establishment period for lawn areas shall be from the time of installation until the final acceptance of the established lawn in writing. An established stand shall be uniform in coverage and of the specified mixture.
No individual lawn area shall have bare spots in excess of three inches in diameter and bare sport shall comprise no more than two percent of the total lawn area.

All replacements shall be subject to the warranty requirements as the original stock. Any damage done during replacement operations shall be the responsibility of the landscape contractor.

3.06 COMPLETION AND ACCEPTANCE

A. The completion of the contract will be accepted and notice of completion recorded only when the entire contract is completed to the satisfaction of the owner's representative.

B. Within then (10) days for the general contractor's notification that the installation is complete, the owner's representative will inspect the installation and if, final acceptance is not given, will prepare a "punch list".

C. Final acceptance will be given by the owner's representative upon satisfactory completion of all work including "punch list" items.

---------- END OF SECTION ----------

PART 1 GENERAL

1.01 SUMMARY

A. Section Includes:
1. Domestic water system pipe and fittings.
2. Fire water line.
3. Fire hydrants.
4. Connection of domestic water system to municipal water system.

B. Related Documents:
The Contract Documents, as defined in the General Conditions **(EJCDC C-700 Standard General Conditions of the Construction Contract**) apply to the Work of this Section. Additional requirements and information necessary to complete the Work of this Section may be found in other documents.

C. Related Sections:
1. Section 31 2333- Trenching for Site Utilities: Water line trenching.
2. Section 33 1305 - Disinfection of Water Distribution: Disinfection of potable water distribution system.
3. Section 33 3115 - Sanitary Sewerage: Site sewer lines.
4. Section 33 5100 - Natural Gas Distribution: Site natural gas lines.
5. Section 33 4915 - Storm Drainage: Site storm drain lines.
6. Section 03 3000 - Cast-In-Place Concrete: Concrete for thrust blocks.

1.02 REFERENCES

A. American Society of Mechanical Engineers (ASME):
1. ASME B16.18 - Cast Copper Alloy Solder Joint Pressure Fittings.
2. ASME B16.22 - Wrought Copper and Copper Alloy Solder Joint Pressure Fittings.

B. American Society for Testing and Materials (ASTM):
1. ASTM D 1785 - Standard Specification for Polyvinyl Chloride (PVC) Plastic Pipe, Schedules 40, 80, and 120.
2. ASTM D 2466 - Standard Specification for Polyvinyl Chloride (PVC) Plastic Pipe Fittings.
3. ASTM D 2855 - Standard Specification for Making Solvent-Cemented Joints with Poly (Vinyl Chloride) (PVC) Pipe and Fittings.
4. ASTM D 3139 - Standard Specification for Joints for Plastic Pressure Pipes Using Flexible Elastomeric Seals.

C. American Water Works Association (AWWA):
1. AWWA C 502 - Dry Barrel Fire Hydrants.
2. AWWA C 504 - Rubber Seated Butterfly Valves.

3. AWWA C 508 - Swing-Check Valves for Waterworks Service, 2 inch through 24 inch NPS.
4. AWWA C 509 - Resilient Seated Gate Valves 3 inch through 12 inch NPS, for Water and Sewage Systems.
5. AWWA C 900 - Polyvinyl Chloride (PVC) Pressure Pipe and Fabricated Fittings, 4 In. Through 12 In. (100mm Through 300mm).

D. Uni-Bell PVC Pipe Association (UBPPA):
1. UBPPA UNI-B-3 - Recommended Practice for the Installation of Polyvinyl Chloride (PVC) Pressure Pipe (Nominal Diameters 4 - 36 Inch).

1.03 SUBMITTALS

A. Section 01 3300 - Submittal Procedures: Requirements for submittals.
1. Product Data: Provide data on pipe materials, pipe fittings, valves, hydrants and accessories.
2. Assurance/Control Submittals:
a. Test Reports: Submit the following reports directly to Architect with copy to Civil Engineer. Prepare reports in conformance with Section 01450 - Quality Control.
1) Pressure test.
2) Leakage test.
b. Qualification Documentation: Submit documentation of experience indicating compliance with specified qualification requirements.

B. Section 01 7800 - Closeout Submittals: Procedures for closeout submittals.
1. Project Record Documents: Accurately record the following:
a. Actual locations of piping mains, valves, connections, and top of pipe elevations.
b. Identify and describe unexpected variations to subsoil conditions and location of uncharted utilities.

1.04 QUALITY ASSURANCE

A. Installer Qualifications: Company specializing in performing site water distribution Work with minimum 5 years documented experience.

B. Regulatory Requirements: Perform Work in accordance with utility company requirements, applicable hearth codes and authority having jurisdiction requirements.

C. Valves: Manufacturer's name and pressure rating marked on valve body.

1.05 DELIVERY, STORAGE, AND HANDLING

A. Section 01 6200 - Product Requirements: Transport, handle, store, and protect Products.

B. Deliver materials in manufacturer’s original, unopened, undamaged containers with identification labels intact.

C. Accept Products on site in manufacturer's packaging. Inspect for damage. Return damaged Products and replace with undamaged Products.

D. Deliver Material Safety Data Sheet (MSDS) for each material to Project Field Superintendent for Contractor Records.

E. Project Field Superintendent shall inspect Products immediately upon delivery to Project Site, determine Product conformance with specified requirements and reject Products not complying with specifications. Project Field Superintendent shall direct that non-complying Products be removed from Project Site immediately.

F. Store materials protected from exposure to harmful weather conditions and at temperature and humidity conditions recommended by manufacturer.

G. Deliver and store valves in shipping containers with labeling in place.

1.06 PROJECT CONDITIONS

A. Field Measurements: Verify that field measurements and invert elevations are as indicated on Drawings.

PART 2 PRODUCTS

2.01 PIPE

A. PVC Fire/Domestic Water Pipe - 4 inches or Greater: AWWA C 900, blue, certified and marked with NSF Certification.
   1. Fittings: Cast iron or ductile iron.
   2. Joints: ASTM D 3139, compression gasket ring.
   3. Trace Tape: Specified in Section 02321.

B. Water Pipe - 3 inches or Smaller: HDPE (Poly Pipe) meeting ASTM D3035 & AWWA C901, or Gasket Joint SDR-21 PVC meeting ASTM-D2241 certified and marked with NSF Certification.
   1. Fittings: Butt Fusion, meeting ASTM-D2513 & ASTM-D3261 (for HDPE) brass, steel, stainless, cast iron, ductile iron (for PVC)
   2. Joints: Butt Fusion, meeting ASTM-D2513 & ASTM-D3261 (for HDPE) ASTM-D3139 compression gaskets meeting ASTM F477 (for PVC)
   3. Trace Tape: Specified in Section 02321.

2.02 GATE VALVES - UP TO 3 INCHES

A. Brass body, teflon coated brass ball, rubber seats and stem seals, Tee stem pre-drilled for control rod, AWWA compression inlet end, compression outlet with electrical ground connector, with control rod, extension box and valve key.

2.03 GATE VALVES - 3 INCHES AND OVER

A. AWWA 509, iron body, bronze trim, non-rising stem with square nut, single wedge, resilient seat, flanged ends, control rod and extension box.

2.04 BALL VALVES - UP TO 2 INCHES

A. Brass body, Teflon coated brass ball, rubber seats and stem seals, Tee stem pre-drilled for control rod, AWWA compression inlet end, compression outlet with electrical ground connector, with control rod and extension box.

2.05 SWING CHECK VALVES - FROM 2 INCHES TO 24 INCHES

A. AWWA C508, iron body, bronze trim, 45 degree swing disc, renewable disc and seat, flanged ends.

2.06 BUTTERFLY VALVES - FROM 2 INCHES TO 24 INCHES

A. AWWA C504, iron body, bronze disc, resilient replaceable seat, water or lug ends, infinite position lever handle.

2.07 HYDRANTS

A. Hydrant: Manufactured in accordance with AWWA C502. Type as required by utility company, local authority having jurisdiction, and as indicated on Drawings.

B. Hydrant Extensions: Provide in multiples of 6 inches with rod and coupling to increase barrel length.

C. Hose and Stream Connection: Match sizes with utility company, two hose nozzles, and one pumper nozzle.

D. Finish: Primer and two coats of enamel or special coating to color as required by utility company.

2.08 THRUST BLOCKS

A. Concrete specified in Section 03 3000. Place thrust blocking consisting of 2,500 psi concrete to provide sufficient bearing area to transmit unbalanced thrust from bends, tees, caps, or plugs to undisturbed soil without loading undisturbed soil in excess of 2,500 pounds per square foot when water main pressure is 100 psi.

B. Thrust block requirements indicated on Drawings.

2.09 BEDDING

A. Specified in Section 31 2333.

PART 3 EXECUTION

3.01 EXAMINATION

A. Section 01 7300 - Execution Requirements: Verification of existing conditions before starting work.

B. Verification of Conditions: Verify that field measurements, surfaces, substrates and conditions are as required, and ready to receive Work.
   1. Verify trench cut, excavations, dimensions, and elevations are as indicated on Drawings.
   2. Verify that building service connection and municipal utility water main size, location and invert elevation are as indicated on Drawings.

C. Report in writing to Architect prevailing conditions that will adversely affect satisfactory execution of the Work of this Section. Do not proceed with Work until unsatisfactory conditions have been corrected.

D. By beginning Work, Contractor accepts conditions and assumes responsibility for correcting unsuitable conditions encountered at no additional cost to the Owner.

3.02 PREPARATION

A. Hand trim excavations to required elevations. Correct over excavation with fine aggregate.

B. Remove large stones or other hard matter, which could damage pipe or impede consistent backfilling or compaction.

C. Cut pipe ends square, ream pipe and tube ends and remove burrs.

D. Remove scale and dirt, on inside and outside, before assembly.

E. Prepare pipe for connections to equipment with flanges or unions.

3.03 BEDDING

A. Excavate pipe trench and place bedding material in accordance with Section 31 2333. Hand trim excavation for accurate placement of pipe to elevations indicated. Provide trench wall shoring as required.

B. Form and place concrete for pipe thrust restraints at any change of pipe direction and at fittings as indicated on Drawings. Place concrete to permit full access to pipe and pipe accessories. Provide thrust blocks on subsoil as incicated on Drawings.

C. Place bedding material at trench bottom, level fill materials in one continuous layer not exceeding 6 inches compacted depth, each layer.

D. Place compacted bedding material to elevation of paving subgrade as indicated on Drawings.

E. Maintain optimum moisture content of bedding material to attain required compaction density.

F. Remove excess backfill and excavated material from site.

3.04 INSTALLATION - PIPE AND FITTINGS

A. Maintain separation of water main from sanitary and storm sewer piping in accordance with state or local code and as indicated on Drawings.

B. Install pipe and fittings in accordance with UBPPA UNI-B-3.

C. Install pipe to allow for expansion and contraction without stressing pipe or joints or as specified by pipe manufacturer.

D. Install access fittings in accordance with local codes to permit disinfection of water system performed under this Section.

E. Form and place concrete for thrust blocks or other specified methods of retainage at each change of direction or end of pipe main.

F. Establish elevations of buried piping as indicated on Drawings.

G. Backfill trench in accordance with Section 31 2333.

H. Install trace tape as specified in Section 31 2333.

3.05 DISINFECTION OF DOMESTIC WATER PIPING SYSTEM

A. Flush and disinfect system in accordance with Section 33 1305.

3.06 SERVICE CONNECTIONS

A. Coordinate the Work with termination of water distribution system connection outside building including connection to municipal Water System Utility.

B. Connect to existing municipal water system in compliance with municipal Water System Utility requirements for new service connections.

C. Provide backflow preventer as required by municipal Water System Utility.

D. Connections with Existing Pipelines: Where connections are made between new work and existing piping, make connection using suitable fittings for conditions encountered. Make each connection with existing pipe at time and under conditions which least interfere with operation of existing pipeline and in compliance with the local utility company.

3.07 FIELD QUALITY CONTROL

A. Section 01 4500 - Quality Control: Perform contractor quality control inspections.
   1. Inspect site water distribution system installation, pipe run location, pipe type, valve type, size and invert elevation.
   2. Tests: Perform the following tests in accordance with UBPPA UNI-B-3.
      a. Pressure Test.
      b. Leakage Test.
   3. Document preparatory, initial and follow-up inspection in Contractor Test and Inspection Reports and submit to Architect.

B. Inspections by Authority Having Jurisdiction:
   1. Do not enclose, cover, or put into operation site water distribution systems until they are inspected and approved by Authority Having Jurisdiction.
   2. Notify Plumbing Official Having Jurisdiction minimum number of days in advance of inspection as required by Authority Having Jurisdiction to schedule Inspection. Verify with Authority Having Jurisdiction.
      a. Underground Inspection: Schedule inspection of site water distribution piping system after trenches are excavated and bedded, piping installed, and before any backfill is placed.
   3. Reinspections: Whenever inspections find that piping system does not pass tests or inspections, make required corrections and schedule a reinspection.
   4. Reports: Prepare and submit inspection reports indicating results of tests and inspections made as specified in Section 01 4500.

C. Correct deficiencies in products and installation found not to be in compliance with Contract Documents.

---------- END OF SECTION ----------

----------THIS PAGE LEFT INTENTIONALLY BLANK----------

DIVISION 33 - UTILITIES
DISINFECTION OF WATER DISTRIBUTION SECTION 33 13 05

PART 1 GENERAL

1.01 SUMMARY

A. Section Includes:
   1. Disinfection of potable water distribution system.
   2. Testing and reporting results.

B. Related Documents:
   1. The Contract Documents, as defined in the General Conditions **(EJCDC C-700 Standard General Conditions of the Construction Contract**) apply to the Work of this Section. Additional requirements and information necessary to complete the Work of this Section may be found in other documents.

C. Related Sections:
   1. Section 33 1115 - Site Water Distribution: Water lines from city connection to within 5 feet of building.
   2. Section 33 1305 - Mechanical: Disinfection of building domestic water piping system.

1.02 REFERENCES

A. American Water Works Association (AWWA):
   1. AWWA B300 - Standard for Hypochlorites.
   2. AWWA B301 - Standard for Liquid Chlorine.
   3. AWWA B302 - Standard for Ammonium Sulfate.
   4. AWWA B303 - Standard for Sodium Chlorite.
   5. AWWA C651 - Standards for Disinfecting Water Mains.

1.03 SUBMITTALS

A. Section 01 3300 - Submittal Procedures: Requirements for submittals.
   1. Assurance/Control Submittals:
      a. Test Reports: Submit the following reports directly to Architect. Prepare reports in conformance with Section 014500 - Quality Control.
         1) Indicate results comparative to specified requirements.
      b. Certificate: Certify that cleanliness of water distribution system meets or exceeds specified requirements.
      c. Qualification Documentation: Submit documentation of experience indicating compliance with specified qualification requirements.

B. Section 01 7800 - Closeout Submittals: Procedures for closeout submittals.
   1. Project Record Documents:
      a. Disinfection Report:

1) Type and form of disinfectant used.
2) Date and time of disinfectant injection start and time of completion.
3) Test locations.
4) Initial and 24 hour disinfectant residuals (quantity in treated water) in ppm for each outlet tested.
5) Date and time of flushing start and completion.
6) Disinfectant residual after flushing in ppm for each outlet tested.

b. Bacteriological Report:
1. Date issued, project name, and testing laboratory name, address, and telephone number.
2. Time and date of water sample collection.
3. Name of person collecting samples.
4. Test locations.
5. Initial and 24 hour disinfectant residuals in ppm for each outlet tested.
6. Coliform bacteria test results for each outlet tested.
7. Certification that water conforms, or fails to conform, to bacterial standards of the authority having jurisdiction in the State where Project is located.

1.04 QUALITY ASSURANCE

A. Perform Work in accordance with AWWA C651.

B. Water Treatment Firm: Company specializing in disinfecting potable water systems specified in this Section with minimum 5 years documented experience.

C. Testing Firm: Company specializing in testing examining potable water systems, certified approved by the State where Project is located.

D. Submit bacteriologist's signature and authority associated with testing.

E. Regulatory Requirements:
1. Conform to applicable code or regulation for performing the work of this Section.
2. Provide certificate of compliance from authority having jurisdiction indicating approval of water system.

PART 2 PRODUCTS

2.01 DISINFECTION CHEMICALS

A. Chemicals: AWWA B300, Hypochlorite, AWWA B301, Liquid Chlorine, AWWA B302, Ammonium Sulfate, and AWWA B303, Sodium Chlorite.

PART 3 EXECUTION

3.01 EXAMINATION

A. Section 01 7300 - Execution Requirements: Verification of existing conditions before starting work.

B. Verification of Conditions: Verify that field measurements, surfaces, substrates and conditions are as required, and ready to receive Work.
   1. Verify that piping system has been cleaned, inspected and pressure tested.
   2. Perform scheduling and disinfecting activity with start-up, testing, adjusting and balancing, demonstration procedures, including coordination with related systems.

C. Report in writing to Architect prevailing conditions that will adversely affect satisfactory execution of the Work of this Section. Do not proceed with Work until unsatisfactory conditions have been corrected.

D. By beginning Work, Contractor accepts conditions and assumes responsibility for correcting unsuitable conditions encountered at no additional cost to the Owner.

3.02 DISINFECTION

A. Pressure test system in accordance with Section 331305. Repair leaks and re-test.

B. Provide and attach required equipment to perform the work of this Section.

C. Introduce treatment into piping system.

D. Maintain disinfectant in system for 24 hours.

E. Flush, circulate, and clean until required cleanliness is achieved; use municipal domestic water.

F. Replace permanent system devices removed for disinfection.

3.03 FIELD QUALITY CONTROL

A. Section 01 4500 - Quality Control: Contractor Quality Control Representative shall perform contractor quality control inspections.
   1. Inspect disinfection water treatment procedures for potable water system.
   2. Test samples in accordance with AWWA C651.
   3. Document preparatory and final inspection in Contractor Test and Inspection Reports and submit to Architect.

B. Correct deficiencies in products and installation found not to be in compliance with Contract Documents.

---------- END OF SECTION ----------

----------THIS PAGE LEFT INTENTIONALLY BLANK----------

PART 1 GENERAL

1.01 SUMMARY

A. Section Includes:
1. Sanitary sewer drainage piping, fittings, accessories and bedding.
2. Clean-out and access structures.
3. Connection to municipal sanitary sewer system.

B. Related Documents:
1. The Contract Documents, as defined in the General Conditions **(EJCDC C-700 Standard General Conditions of the Construction Contract)** apply to the Work of this Section. Additional requirements and information necessary to complete the Work of this Section may be found in other documents.

C. Related Sections:
1. Section 33 0513 - Manholes: Sanitary sever manholes.
2. Section 31 2333 - Trenching for Site Utilities: Sewer line trenching.
3. Section 33 1115 - Site Water Distribution: Site water lines.
4. Section 33 5100 - Natural Gas Distribution: Site natural gas lines.
5. Section 33 4915 - Storm Drainage: Site storm drain lines.
6. Section 03 3000 - Cast-In-Place Concrete: Concrete for base pads and encasement.

1.02 REFERENCES

A. American Society for Testing and Materials (ASTM):
1. ASTM D 2321 - Recommended Practice for Underground Installation of Flexible Thermoplastic Sewer Pipe.
2 ASTM D 3034 - Standard Specification for Type PSM Poly (Vinyl Chloride) (PVC) Sewer Pipe and Fittings.

1.03 SUBMITTALS

A. Section 01 3300 - Submittal Procedures: Requirements for submittals.
1. Product Data: Provide data indicating pipe and pipe accessories.
2. Assurance/Control Submittals:
a. Test Reports: Submit the following reports directly to Architect with copy to Civil Engineer. Prepare reports in conformance with Section 01450 - Quality Control.
1) Air Exfiltration Test.
2) Water Infiltration Test.
3) Water Exfiltration Test.
b. Qualification Documentation: Submit documentation of experience indicating compliance with specified qualification requirements.

B. Section 017800 - Closeout Submittals: Procedures for closeout submittals.
   1. Project Record Documents: Accurately record the following:
      a. Actual locations of pipe runs, connections, manholes, cleanouts, and invert elevations.
      b. Identify and describe unexpected variations to subsoil conditions and location of uncharted utilities.

1.04 QUALITY ASSURANCE

A. Installer Qualifications: Company specializing in performing sanitary sewerage work with minimum 5 years documented experience.

B. Regulatory Requirements: Perform work in accordance with utility company requirements, applicable health codes and authority having jurisdiction requirements.

1.05 DELIVERY, STORAGE, AND HANDLING

A. Section 01 6200 - Product Requirements: Transport, handle, store, and protect Products.

B. Deliver materials in manufacturer's original, unopened, undamaged containers with identification labels intact.

C. Accept Products on site in manufacturer's packaging. Inspect for damage. Return damaged Products and replace with undamaged Products.

D. Deliver Material Safety Data Sheet (MSDS) for each material to Project Field Superintendent for Contractor Records.

E. Project Field Superintendent shall inspect Products immediately upon delivery to Project Site, determine Product conformance with specified requirements and reject Products not complying with specifications. Project Field Superintendent shall direct that non-complying Products be removed from Project Site immediately.

F. Store materials protected from exposure to harmful weather conditions and at temperature and humidity conditions recommended by manufacturer.

1.06 PROJECT CONDITIONS

A. Field Measurements: Verify that field measurements and elevations are as indicated on Drawings.

1.07 COORDINATION

A. Coordinate Work with termination of sanitary sewer connection outside building, connection to municipal sewer utility service and trenching.

PART 2 PRODUCTS

2.01 PIPE MATERIALS

A. Plastic Pipe: ASTM D 3034, Type PSM, Poly (Vinyl Chloride) (PVC) material; bell and spigot style solvent sealed joint end.

B. Pipe Joints: Joints integrally molded bell ends and factory supplied elastomeric gaskets and lubricant.

C. Pipe Fittings: Same material as pipe molded or formed to suit pipe size and end design, in required tee, bends, elbows, cleanouts, reducers, traps and other configurations required.

D. Trace Tape: Specified in Section 31 2333.

2.02 CLEANOUTS

A. Lid and Frame: Cast iron construction with removable lid as indicated on Drawings.

B. Shaft Construction: Material and internal diameter as indicated on Drawings.

C. Base Pad: Cast-in-place concrete specified in Section 03 3000.

D. Manholes: Specified in Section 33 0513.

2.03 BEDDING

A. Specified in Section 32 1333.

PART 3 EXECUTION

3.01 EXAMINATION

A. Section 01 7300 - Execution Requirements: Verification of existing conditions before starting work.

B. Verification of Conditions: Verify that field measurements, surfaces, substrates and conditions are as required, and ready to receive Work.
   1. Verify trench cut, excavations, dimensions, and elevations are as indicated on Drawings.
   2. Verify that building service connection and municipal utility sewer main size, location and invert elevation are as indicated on Drawings.

C. Report in writing to Architect prevailing conditions that will adversely affect satisfactory execution of the Work of this Section. Do not proceed with Work until unsatisfactory conditions have been corrected.

D. By beginning Work, Contractor accepts conditions and assumes responsibility for correcting unsuitable conditions encountered at no additional cost to the Owner.

3.02 PREPARATION

A. Hand trim excavations to required elevations. Correct over excavation with fine aggregate.

B. Remove large stones or other hard matter which could damage pipe or impede consistent backfilling or compaction.

3.03 BEDDING

A. Excavate pipe trench and place bedding material in accordance with Section 31 2316. Hand trim excavation for accurate placement of pipe to elevations indicated.

B. Place bedding material at trench bottom, level materials in continuous layer not exceeding 6 inches compacted depth, each layer. Place compacted bedding material to elevation of paving subgrade as indicated on Drawings.

C. Maintain optimum moisture content of bedding material to attain required compaction density.

D. Remove excess backfill and excavated material from site.

3.04 INSTALLATION - PIPE

A. Install pipe, fittings, and accessories in accordance with ASTM D 2321, manufacturer's published instructions and state or local requirements. Seal joints watertight.

B. Install pipe on minimum 4 inch bedding as specified in Section 312333.

C. Lay pipe to slope gradients indicated on Drawings.

D. Refer to Section 31 2333 for trenching requirements. Do not displace or damage pipe when compacting.

E. Connect to building sanitary sewer outlet and municipal sewer system as indicated on Drawings.

F. Install trace tape as specified in Section 31 2333.

3.05 INSTALLATION - CLEANOUTS

A. . Form bottom of excavation clean and smooth to elevation indicated on Drawings.

B. Form and place cast-in-place concrete encasement, with provision for sanitary sewer pipe to be placed at required elevations.

C. Mount lid and frame level in grout, secured to top section at elevation indicated.

3.06 SERVICE CONNECTIONS

A. Coordinate the Work with termination of sanitary sewer connection outside building including connection to municipal sanitary sewer system.

B. Connect to existing municipal sanitary sewer system in compliance with utility requirements for new service connections.

3.07 FIELD QUALITY CONTROL

A. Section 01 4500 - Quality Control: Contractor Quality Control Representative shall perform contractor quality control inspections.
   1. Inspect site sewerage system installation, pipe run location, pipe type, size, invert elevation, cleanout type and cleanout locations.
   2. Leakage Tests: Perform the following tests in accordance with pipe manufacturer's published instructions.
      a. Air Exfiltration Test.
      b. Water Infiltration Test.
      c. Water Exfiltration Test.
   3. Document preparatory, initial and follow-up inspection in Contractor Test and Inspection Reports and submit to Architect.

B. Inspections by Authority Having Jurisdiction:
   1. Do not enclose, cover, or put into operation site sanitary sewerage systems until they are inspected and approved by Authority Having Jurisdiction.
   2. Notify Plumbing Official Having Jurisdiction minimum number of days in advance of inspection as required by Authority Having Jurisdiction to schedule Inspection. Verify with Authority Having Jurisdiction.
      a. Underground Inspection: Schedule inspection of site sanitary sewerage piping system after trenches are excavated and bedded, piping installed, and before any backfill is placed.
   3. Reinspections: Whenever inspections find that piping system does not pass tests or inspections, make required corrections and schedule a reinspection.
   4. Reports: Prepare and submit inspection reports indicating results of tests and inspections made as specified in Section 014500.

C. Correct deficiencies in products and installation found not to be in compliance with Contract Documents.

---------- END OF SECTION ----------

----------THIS PAGE LEFT INTENTIONALLY BLANK----------

DIVISION 33 - UTILITIES
NATURAL GAS DISTRIBUTION SECTION 33 51 00

PART 1 GENERAL

1.01 SUMMARY

A. Section Includes:
   1. Pipe and fittings for site utility natural gas distribution.

B. Related Documents:
   1. The Contract Documents, as defined in the General Conditions **(EJCDC C-700 Standard General Conditions of the Construction Contract)** apply to the Work of this Section. Additional requirements and information necessary to complete the Work of this Section may be found in other documents.

C. Related Sections:
   1. Section 31 2333 - Trenching for Site Utilities: Gas line trenching.
   2. Section 33 1115 - Site Water Distribution: Site water lines.
   3. Section 33 3115 - Sanitary Sewerage: Site sewer lines.
   4. Section 33 4915 - Storm Drainage: Site storm drain lines.
   5. Division 15 - Mechanical: Building natural gas piping.

1.02 REFERENCES

A. American Society of Mechanical Engineers (ASME):
   1. ASME Sec. 9 - Welding and Brazing Qualifications.
   2. ASME Boiler and Pressure Code.

B. American Society for Testing and Materials (ASTM):
   1. ASTM A 53 - Pipe, Steel, Black and Hot-Dipped, Zinc Coated Welded and Seamless.
   2. ASTM A 234 - Pipe Fittings of Wrought Carbon Steel and Alloy Steel for Moderate and Elevated Temperatures.

C. American National Standards Institute (ANSI):
   1. ANSI B31.2 - Fuel Gas Piping.
   2. ANSI B31.8 - Gas Transmission and Distribution Piping Systems.

D. National Fire Protection Association (NFPA):
   1. NFPA 54 - National Fuel Gas Code.

1.03 SUBMITTALS

A. Section 01 3300 - Submittal Procedures: Requirements for submittals.
   1. Product Data: Provide data on pipe materials, pipe fittings, valves and accessories.

2. Assurance/Control Submittals:
    a. Test Reports: Submit the following reports directly to Architect form, with copy to Civil Engineer. Prepare reports in conformance with Section 01450 - Quality Control.
        1) NFPA 54 tests.
        2) Capacities and pressure ratings for meters, regulators and valves.
        3) Pressure settings for pressure regulators.
    b. Qualification Documentation: Submit documentation of experience indicating compliance with specified qualification requirements.

B. Section 017800 - Closeout Submittals: Procedures for closeout submittals.
    1. Project Record Documents: Accurately record the following:
        a. Actual locations of piping mains, valves, connections, and top of pipe elevations.
        b. Identify and describe unexpected variations to subsoil conditions and location of uncharted utilities.

1.04 QUALITY ASSURANCE

A. Installer Qualification: Company specializing in performing natural gas distribution Work with minimum 5 years documented experience.

B. Regulatory Requirements: Perform work in accordance with Utility Company requirements and authority having jurisdiction.
    1. Conform to NFPA 54, ANSI B31.2 and ANSI B31.8.

C. Gas Cock: Manufacturer's name and pressure rating marked on valve body.

D. Welding Materials and Procedures: Conform to ASME Boiler and Pressure Vessel Code and applicable State regulations.

E. Welders Certification: In accordance with ASME Sec 9.

1.05 DELIVERY, STORAGE, AND HANDLING

A. Section 01 6200 - Product Requirements: Transport, handle, store, and protect Products.

B. Deliver materials in manufacturer’s original, unopened, undamaged containers with identification labels intact.

C. Accept Products on site in manufacturer’s packaging. Inspect for damage. Return damaged Products and replace with undamaged Products.

D. Deliver Material Safety Data Sheet (MSDS) for each material to Project Field Superintendent for Contractor Records.

E. Project Field Superintendent shall inspect Products immediately upon delivery to Project Site, determine Product conformance with specified requirements and reject Products not complying with specifications. Project Field Superintendent shall direct that non-complying Products be removed from Project Site immediately.

F. Store materials protected from exposure to harmful weather conditions and at temperature and humidity conditions recommended by manufacturer.

G. Deliver and store valves in shipping containers with labeling in place.

PART 2 PRODUCTS

2.01 PIPE

A. Steel Pipe: ASTM A 53, Schedule 40, black.
   1. Fittings: ASTM A 234, forged steel welding type.
   2. Joints: ANSI B31.2, welded.
   3. Jackets: Double layer, half lapped, 10 mil polyethylene tape.

2.02 GAS COCKS

A. 2 Inches and Smaller: 150 psig WOG, bronze body, bronze tapered plug, non-lubricated, Teflon packing, threaded ends with cast iron curb box, cover, and key.

B. 2 Inches and Larger: 125 psig WOG, Steel or Cast iron body and tapered plug, non-lubricated, Teflon packing, threaded ends, with cast iron curb box, cover, and key.

2.03 PRESSURE REGULATING VALVES

A. Valves: Single stage, malleable iron body, corrosion-resistant, pressure regulator with atmospheric vent, elevation compensator; with threaded ends for 2 inch and smaller, flanged ends larger than 2 inch.

B. Capacity: For inlet and outlet gas pressures, specific gravity, and flow rate indicated on Drawings.

PART 3 EXECUTION

3.01 EXAMINATION

A. Section 01 7300 - Execution Requirements: Verification of existing conditions before starting work.

B. Verification of Conditions: Verify that field measurements, surfaces, substrates and conditions are as required, and ready to receive Work.
   1. Verify trench cut, excavations and dimensions are as indicated on Drawings.

2. Verify that building service connection and utility gas main size, location, and depth are as indicated.

C. Report in writing to Architect prevailing conditions that will adversely affect satisfactory execution of the Work of this Section. Do not proceed with Work until unsatisfactory conditions have been corrected.

D. By beginning Work, Contractor accepts conditions and assumes responsibility for correcting unsuitable conditions encountered at no additional cost to the Owner.

3.02 PREPARATION

A. Hand trim excavations to required elevations. Correct over excavation with fine aggregate.

B. Remove large stones or other hard matter which could damage pipe or impede consistent backfilling or compaction.

3.03 BEDDING

A. Excavate pipe trench and place bedding material in accordance with Section 31 2333 for work of this Section. Provide trench wall shoring as required.

B. Place bedding material at trench bottom, level fill materials in one continuous layer not exceeding 6 inches compacted depth, each layer. Place compacted bedding material to elevation of subgrade as indicated on Drawings.

C. Maintain optimum moisture content of bedding material to attain required compaction density.

D. Remove excess backfill and excavated material from site.

3.04 INSTALLATION - PIPING

A. Maintain separation of gas line from sewer, water or storm water piping in accordance with state or local code.

B. Route piping in straight line.

C. Install piping to allow for expansion and contraction without stressing pipe or joints.

D. Install cocks and other fittings as required.

E. Lay pipe on bedding.

F. Wrap couplings and fittings of steel pipe with polyethylene tape and heat shrink over pipe.

G. Backfill trench in accordance with Section 31 2333.

H. Center and plumb valve box over valve. Set box cover flush with finished ground surface. Prevent shock or stress from being transmitted through valve box to valve.

I. Wrap valve and valve box with polyethylene tape and heat shrink or paint valves and valve boxes with red anti-rust primer and one coat of epoxy paint.

3.05 SERVICE CONNECTIONS

A. Provide sleeve in foundation wall for gas service main. Seal enlarged sleeve watertight.

B. Anchor service main to interior surface of foundation wall.

C. Install service regulator adjacent to building wall in location indicated on Drawings.

D. Install service regulator and riser pipe to prevent undue stress upon service pipe. For plastic service pipe, use steel pipe riser from below ground to regulator.

E. Provide regulator vent with rain and insect proof opening, terminating not less than five feet away from building openings.

F. Connections with Existing Pipelines: Where connections are made between new Work and existing piping, make connection using suitable fittings for conditions encountered. Make each connection with existing pipe at time and under conditions which least interfere with operation of existing pipeline and in compliance with the local Utility Company.

3.06 FIELD QUALITY CONTROL

A. Section 01 4500 - Quality Control: Contractor Quality Control Representative shall perform contractor quality control inspections.
   1. Inspect gas piping in conformance with NFPA 54, Part 4 and local Utility Company requirements.
   2. Perform the following tests:
      a. Test and purge gas piping in conformance with NFPA 54, Part 4 and local Utility Company requirements.
      b. Verify capacities and pressure ratings of gas meters, regulators, and valves.
      c. Verify required pressure settings for pressure regulators.
   3. Document preparatory, initial and follow-up inspection in Contractor Test and Inspection Reports and submit to Architect.

B. Inspections by Authority Having Jurisdiction and Local Utility Company:
   1. Do not enclose, cover, or put into operation natural gas distribution systems until they are inspected and approved by Authority Having Jurisdiction and local Utility Company.

2. Notify Plumbing Official Having Jurisdiction and local Utility Company minimum number of days in advance of inspection as required by Authority Having Jurisdiction and local Utility Company to schedule Inspection. Verify with Authority Having Jurisdiction and local Utility Company.
   a. Underground Inspection: Schedule inspection of natural gas distribution piping system after trenches are excavated and bedded, piping installed, and before any backfill is placed.
3. Reinspections: Whenever inspections find that piping system does not pass tests or inspections, make required corrections and schedule a reinspection.
4. Reports: Prepare and submit inspection reports indicating results of tests and inspections made as specified in Section 014500.

C. Correct deficiencies in products and installation found not to be in compliance with Contract Documents.

---------- END OF SECTION ----------

KINGFISHER COUNTY COMMISSIONERS

Jeff Moss, District 1
Ray Alan Shimanek, District 2
Heath Dobrovolny, District 3

Phone: (405) 375-3808
Fax: (405) 375-2366

Kingfisher County Courthouse
101 S. Main, Room #9
Kingfisher, OK 73750

January 19, 2023

Bid #15-22-23

NOTICE TO BIDDERS

Notice is hereby given that the Board of County Commissioners of Kingfisher County will receive sealed bids for the remodeling of the Hennessey Fire Department. Bids will be accepted at the Kingfisher County Courthouse in the Office of the County Clerk until 4:00pm on the 17th day of February, 2023 to be opened at their regular meeting of February 21st, 2023.

Statement of Work and Specifications, plans and manual of the project to be bid are **located online at Kingfisher.okcounties.org under the bids tab.** Also paper copy is available for viewing (not to take) in the Kingfisher County Engineer's office. The Pre-Bid meeting will be at 10:00am on Tuesday, February 7th, 2023 at the project site 501 S Main St, Hennessey, OK 73742.

The successful bidder is required to produce a performance bond upon request and to show certificates of Insurance, its limits, and Workers Compensation Insurance. This will be detailed in the Statement of Work and general requirements.

The Board of County Commissioners reserves the right to reject any or all bids. All bidders must complete a statement of non-collusion and a Cashier's Check, a certified check, or a surety bid bond in the amount of five percent (5%) of the gross amount of base bid as a guaranty, shall accompany the sealed proposal of each bidder. Deposits will be returned to the unsuccessful bidders and successful bidders, upon approval of the contract and submission of a 100% Performance Bond, a 100% Statutory Bond, and a 100% Maintenance Bond. Please contact Kingfisher County Clerk's office for bid results at 405-375-3887.

Board of County Commissioners
Kingfisher County Courthouse
Kingfisher, Oklahoma

CHAIRMAN: _____
Heath Dobrovonly

MEMBER: _____
Jeff Moss

MEMBER: _____
Ray Shimanek

ATTEST:

Jeanne Bowers

COUNTY CLERK

COUNTY CLERK SEAL KINGFISHER COUNTY, OK

BID BOND

A Bidder's Bond, Certified or Cashier's Check is enclosed in the amount of $_____, as required.

STATE OF _____)

) SS:

COUNTY OF _____)

_____; of lawful age, being first duly sworn, upon his oath, deposes and says, that he executed the accompanying bid on behalf of the bidder named therein for the construction of the above improvement in KINGFISHER COUNTY, OKLAHOMA, that he had lawful authority so to do and that the bidder has not been a party to any collusion among bidders in restraint of freedom of competition by agreement to bid at a fixed price or to refrain from bidding; or with any State or County official or employee as to quantity, quality, or price in the prospective contract, or any other terms of said prospective contract; or in any discussions between bidders and any State or County officials concerning exchange of money or other thing of value for special consideration in the letting of a contract; said bidder has neither directly nor indirectly entered into any agreement, express or implied, with any bidder or bidders, having for its object the controlling of the price or amount of such bid or bids, the limiting of the bids or bidders, the parceling or farming out to any bidder or bidders, or other persons of any part of the contract or any part of the profits thereof and that he has not and will not divulge the sealed bid on such public improvement to any person whatsoever, except those having a partnership or other financial interest with him in said bid or bids, until after the sealed bid or bids are opened.

If partnership, give name

and address of each partner _____

By:_____

_____

Address:_____

_____

Incorporated under the

laws of the State of:_____

Subscribed and sworn to before me this _____ day of _____, 20____.

_____

Notary Public

(SEAL)

My Commission Expires: _____

MAINTENANCE BOND

KNOW ALL MEN BY THESE PRESENT, that _____,Principal, and, a corporation organized under the laws of the State of _____, and authorized to transact business in the State of Oklahoma, as Surety, are held firmly bound unto Kingfisher County, in the penal sum of _____ Dollars ($_____) in lawful money of the United States of America, said sum being the contract price, for the payment of which, well and truly to be made, we bind ourselves and each of us, our heirs, executors, administrators, trustees, successors, and assigns, jointly and severally, firmly by these presents.

Dated this _____ day of _____, 20____.
The condition of this obligation is such that:
WHEREAS, said Principal entered into a written contract with Kingfisher County Oklahoma, dated _____, 20____, for:

Kingfisher County
Hennessey Fire Department Remodel project

all in compliance with the plans and specifications therefor, made a part of said contract and on file in the Office of the County Clerk, located in the County Courthouse Building in Kingfisher, Oklahoma.

NOW, THEREFORE, if said Principal shall pay or cause to be paid to Kingfisher County, Oklahoma, all damage, loss, and expense which may result by reason of defective materials and/or workmanship in connection with said work, occurring within a period of **one (1) year** from and after acceptance of said project by Kingfisher County, Oklahoma; then this obligation shall be null and void, otherwise to be and remain in full force and effect.

It is further expressly agreed and understood by the parties hereto that no changes or alterations in said contract and no deviations from the plan or mode of procedure herein fixed shall have the effect of releasing the sureties, or any of them, from the obligations of this bond.

IN WITNESS WHEREOF, the said Principal has caused these presents to be executed in its name and its corporate seal to be hereunto affixed by its duly authorized officers, and the same Surety has caused these presents to be executed in its name and its corporate seal to be hereunto affixed by its attorney-in- fact, duly authorized so to do, the day and year first above written.

Principal:

_____

By:_____

Title

(SEAL)

ATTEST:

_____

Secretary

Surety:

_____

By:_____

Attorney-in-Fact

PERFORMANCE BOND

KNOW ALL MEN BY THESE PRESENT, that _____, Principal, a corporation organized under the laws of the State of _____, and authorized to transact business in the State of Oklahoma, as Surety, are held firmly bound Kingfisher County, Oklahoma, in the penal sum of _____ Dollars ($) in lawful money of the United States of America, for the payment of which, well and truly to be made, we bind ourselves and each of us, our heirs, executors, administrators, trustees, successors, and assigns, jointly and severally, firmly by these presents.

Dated this _____ day of _____, 20____.
The condition of this obligation is such that:
WHEREAS, said Principal entered into a written contract with Kingfisher County Oklahoma,
dated _____, 20____, for:

Kingfisher County
Hennessey Fire Department Remodel project

all in compliance with the plans and specifications therefor, made a part of said contract and on file in the Office of the County Clerk, located in the County Courthouse Building in Kingfisher, Oklahoma.

NOW, THEREFORE, if said Principal shall in all particulars, well, truly, and faithfully perform and abide by said contract and each and every covenant, condition, and part thereof and shall fulfill all obligations resting upon said principal by the terms of said contract and specifications and if said principal shall protect and save harmless Kingfisher County, Oklahoma from any pecuniary loss resulting from the breach of any of the items, covenants and conditions of said contract resting upon said principal, then this obligation shall be null and void, otherwise to be and remain in full force and effect.

It is further expressly agreed and understood by the parties hereto that no changes or alterations in said contract and no deviations from the plan or mode of procedure herein fixed shall have the effect of releasing the sureties, or any of them, from the obligations of this bond.

IN WITNESS WHEREOF, the said Principal has caused these presents to be executed in its name and its corporate seal to be hereunto affixed by its duly authorized officers, and the same Surety has caused these presents to be executed in its name and its corporate seal to be hereunto affixed by its attorney-in-fact, duly authorized so to do, the day and year first above written.

Principal:

_____

By:_____
Title

(SEAL)
ATTEST:

_____
Secretary

Surety:

_____

By:_____
Attorney-in-Fact

STATUTORY BOND

KNOW ALL MEN BY THESE PRESENT, that _____, Principal, and , a corporation organized under the laws of the State of _____, and authorized to transact business in the State of Oklahoma, as Surety, are held firmly bound unto Kingfisher County, Oklahoma, in the penal sum of Dollars ($_____) in lawful money of the United States of America, for the payment of which, well and truly to be made, we bind ourselves and each of us, our heirs, executors, administrators, trustees, successors, and assigns, jointly and severally, firmly by these presents.

Dated this _____ day of _____, 20____.

The condition of this obligation is such that:

WHEREAS, said Principal entered into a written Contract with Kingfisher County Oklahoma,

dated _____, 20_____, for:

Kingfisher County
Hennessey Fire Department Remodel project

all in compliance with the plans and specifications therefor, made a part of said contract and on file in the Office of the County Clerk, located in the County Courthouse Building in Kingfisher, Oklahoma.

NOW, THEREFORE, if said Principal shall fail or neglect to pay all indebtedness incurred by said Principal or subcontractors of said Principal who performs work in the performance of such contract, for labor and materials and repairs to and parts of equipment used and consumed in the performance of said contract within thirty (30) days after the same becomes due and payable, the person, firm, or corporation entitled thereto may sue and recover on this bond, the amount so due and unpaid.

It is further expressly agreed and understood by the parties hereto that no changes or alterations in said contract and no deviations from the plan or mode of procedure herein fixed shall have the effect of releasing the sureties, or any of them, from the obligations of this bond.

IN WITNESS WHEREOF, the said Principal has caused these presents to be executed in its name and its corporate seal to be hereunto affixed by its duly authorized officers, and the same Surety has caused these presents to be executed in its name and its corporate seal to be hereunto affixed by its attorney-in-fact, duly authorized so to do, the day and year first above written.

Principal:

_____

By:_____
Title

(SEAL)

ATTEST:

_____
Secretary

Surety:

_____

By:_____
Attorney-in-Fact

NOTICE TO PROCEED

TO:

FROM: Kingfisher County Commissioners, Kingfisher County, Oklahoma

YOU ARE HEREBY NOTIFIED that all contract documents have been executed and accepted in relation to the contract on

Kingfisher County
Hennessey Fire Department Remodel project

entered into on the _____ day of _____, 20 ___, by and between the County and

_____ and that work may now be commenced in accordance with said Contract.
With a contract time of _____ calendar days, the completion date is the ____ day of _____.

DATED at Kingfisher County, Oklahoma this _____ day of _____, 20____.

Kingfisher County Commissioners, Kingfisher County, Oklahoma

By: _____
Chairman

cc: County Clerk

INVOICE AFFIDAVIT

STATE OF OKLAHOMA)

) SS.

COUNTY OF KINGFISHER)

The undersigned (architect, contractor, supplier, engineer, or supervisory official) of lawful age, being first duly sworn, on oath says that this invoice, claim or contract is true and correct. Affiant further states that the work, services, or materials as shown by this invoice or claim have been completed or supplied in accordance with the plans, specifications, orders or requests furnished to the affiant. Affiant further states that (s) he has made no payment, given or donated or agreed to pay, give or donate either directly or indirectly to any elected official, officer or employee of the State of Oklahoma, of money or any other thing of value to obtain payment or the award of this contract.

Kingfisher County

Hennessey Fire Department Remodel project

_____

Signature - Contractor or Supplier

_____

Company Name (Print or Type)

_____

Address

_____

City, State, Zip

Subscribed and sworn to before me this _____ day of _____, 20____.

_____, Notary Public

My Commission Expires:_____

PROPOSAL

TO: Kingfisher County Commissioners

Kingfisher County, Oklahoma

Gentlemen:

Pursuant to the notice inviting proposals, the undersigned bidder herewith submits his proposal.

He declares he has carefully examined the Plans, Specifications and forms of Contract and bonds as set forth in the proceedings for:

Kingfisher County
Hennessey Fire Department Remodel project

and that he has reached a full understanding of everything required on said Plans and Specifications, and that he has informed himself as to the kind and quantities of various materials to be furnished and/or the nature and location of the work to be done, and all other matters affecting the work.

The undersigned bidder proposes and agrees that if his proposal is accepted, to enter into contract with the County, on forms prescribed, with approved sureties, within seven (7) days, after notice of award to execute the Contract, and to furnish to the County a satisfactory Performance and Statutory Bond in the sum of 100% of the contract price, guaranteeing the faithful performance of the work and payment of bills.

To do any extra work not covered by the following schedule of prices or stipulated lump sum price which may be ordered by the Commissioner/or designee and to accept as full compensation therefor such prices as may be agreed upon in writing by the Engineer and the Contractor in accordance with Section 108.04 of the General Provisions.

It is further agreed that the Contractor shall begin the work on the date indicated in the Notice to Proceed and to prosecute said work in such a manner as to complete all work contracted for by _____ **calendar days** following the Notice to Proceed. The Notice to Proceed shall become effective within 30 calendar of the bid opening.

The Contractor shall take out and maintain public liability insurance in accordance with Section 7 of the General Provisions of the Specifications. A copy of said Specifications is now on file in the Office of the County Clerk.

Upon completion of the Contract, the Contractor shall furnish to the County a satisfactory Maintenance Bond in the amount of 100% of the final contract price, guaranteeing the maintenance of the work for a period of **ONE** (1) year after acceptance by the County.

Accompanying this proposal is a proposal guaranty for 5% of the total bid, payable to Kingfisher County, which is to be forfeited, as liquidated damages, if, in the event that this proposal is accepted, the undersigned shall fail to execute the contract and furnish satisfactory contract bond under the conditions and within the time specified in this proposal. Otherwise said proposal guaranty is to be returned to the undersigned.

CONSTRUCTION CONTRACT

This Contract is made and entered into this _____ day of _____, 20___, by and between Kingfisher County, Oklahoma hereinafter called "County and _____, a(n) _____ _____, hereinafter called "Contractor."

W I T N E S S E T H

WHEREAS, in accordance with the state law and the Public Competitive Bidding act of 1974, 61 Okla. Stat. §§ 101 et seq. (hereinafter collectively referred to as "state law"), the County has caused to be prepared certain plans, specifications, and other bidding documents (the "Bidding Documents") for the work hereinafter described; and,

WHEREAS, in accordance with state law, the County has approved and adopted all of said Bidding Documents and has caused an Invitation to Bid to be given and advertised and has received sealed bids for the furnishing of all labor and materials for:

Kingfisher County
Hennessey Fire Department Remodel project

as outlined and set out in the Bidding Documents and in accordance with the terms and provisions of this Contract; and,

WHEREAS, Contractor, in response to said Invitation to Bid, has submitted to the County, in the manner and at the time specified, a sealed bid in accordance with the terms of the Bidding Documents; and,

WHEREAS, the County, in the manner provided by state law, has publicly opened, examined and canvassed the bids submitted and has determined and declared the above-named Contractor to be the lowest responsible bidder on the above described project; and,

WHEREAS, the County has duly awarded this Contract to said Contractor, for the sum named in the bid, to-wit:

Dollars and Cents spelled out here ($.).

NOW THEREFORE, in consideration of the mutual promises, covenants, and conditions herein stated and in consideration of the mutual benefits, which will accrue to the parties, the sufficiency of which is acknowledged by the parties, the parties agree as follows:

1. Incorporation of Bidding Documents. This Contract hereby incorporates, as if fully set out herein, the Plans, Specifications, General Provisions, Special Provisions, Contractor's Proposal and any and all Addendums issued. All of these documents have been provided to and/or by the Contractor and are on file in the Office of the County Clerk. Hereinafter, these documents shall be collectively referred to as "Bidding Documents."

2. Engagement of Contractor. The County hereby engages Contractor to perform certain construction services for the benefit of the County. Contractor accepts such engagement pursuant to the terms and conditions set forth herein.

3. Scope of Engagement. Contractor shall, in a good and first-class, workmanlike manner, at its own cost and expense, furnish all labor, materials, tools and equipment required to perform and complete said work in strict accordance with the Bidding Documents, with the following additions and/or exceptions: (if none, so state.)

(NONE)

4. Payments to Contractor. The County shall make payments to the Contractor in the following manner:

   a. On completion of the work, but prior to the acceptance thereof by the County, it shall be the duty of the County Commissioner, or designee, to determine that said work has been completely and fully performed in accordance with this Contract and all incorporated documents; and upon making such determination, said official shall make his final certification to the County.

   b. The Contractor shall furnish proof that all claims and obligations incurred by him in connection with the performance of said work have been fully paid and settled; said information shall be in the form of an affidavit, which shall bear the approval of the surety on the contract bonds, for payment of the final estimate to the Contractor; thereupon, the final estimate (including retainage, but less any liquidated damages), will be approved and paid, within five (5) days after the first regularly scheduled meeting of the County of the following month.

5. Bargaining. The County and the Contractor have had the opportunity to seek independent legal counsel before entering into this Contract. The language of this Contract shall be construed simply, according to its fair meaning, and not strictly for or against either party.

6. Third Party Beneficiaries. Nothing in this Contract, expressed or implied, is intended to confer upon any person other than the parties hereto and their respective assigns, any rights or remedies under or by reason of this Contract, except as provided expressly herein.

7. Notices. Whenever a notice is required to be given in writing and under the terms of this Contract, or any extension hereunder, such notice shall either be hand-delivered or mailed by certified mail, return receipt requested, and directed to the respective parties at the following addresses:

If to the County:	If to Contractor:
Kingfisher County Commissioners	_____
Kingfisher County Courthouse, 101 South Main, Room#9	_____
Kingfisher, OK 73750	_____

or at such other address as a party shall specify by like notice to the other party hereto. Notices shall be effective on the date of delivery.

8. Counterparts. This Contract may be executed in any number of counterparts, and when each party has signed and delivered to the other at least one (1) such counterpart, each counterpart shall be deemed an original, and when taken together with other signed counterparts, shall constitute one (1) agreement; provided, however, this Contract shall not be binding upon the parties hereto until signed by all of the parties.

9. Integration and Amendments. This Contract constitutes the entire agreement between the parties and may not be amended, altered, modified or changed in any way except in writing signed by all parties to this Contract and which specifically references this Contract. There are no other agreements, representations or warranties, whether oral or written, regarding the subject matter of this Contract. No course of dealings involving the parties hereto and no usage of trade shall be relevant or admissible to interpret, supplement, explain or in any way vary any of the terms expressly set forth in this Contract. Any amendment to this Contract shall be attached to this Contract and all of the terms in this Contract not addressed in the amendment shall remain in full force and effect.

10. Binding Effect. This Contract binds the parties and any successors and assigns of the parties.

11. Severability. If any one or more of the sections, sentences, clauses, or parts be held invalid for any reason, the invalidity of such section, sentence, clause, or part shall not affect nor prejudice the applicability and validity of any other provision of this Contract.

IN WITNESS WHEREOF, the parties hereto have caused this Contract to be executed on the day and year last written below.

Date: _____

Kingfisher County Commissioners,

_____
Chairman

(SEAL)

ATTEST:

_____
County Clerk

Approved as to form:

_____
Assistant District Attorney

Date: _____ _____,

a(n) _____ _____

_____
Signature

_____
Printed Name

_____
Title

ATTEST:

_____
Secretary and/or Witness

State of Oklahoma)
) ss.
County of _____)

_____, of lawful age, being first duly sworn, on oath, says that (s)he is the agent authorized by the Contractor to submit the above Contract to Kingfisher County. Affiant further states that Contractor has not paid, given or donated, or agreed to pay give or donate to any officer or employee of Kingfisher County, any money or other valuable thing, either directly or indirectly, in the procuring of this Contract.

_____
Signature

_____
Printed Name/Title

Subscribed and sworn to before me this _____ day of _____, _____.

(SEAL)

_____
Notary Public

My Commission Expires: _____
My Commission Number: _____

S.A. & I. 425 (2000)

AFFIDAVIT FOR FILING WITH COMPETIVE BID

State of Oklahoma) SS

County of Kingfisher)

_____, lawful age, being first duly sworn, on oath says, that (s)he is the agent authorized by the bidder to submit the attached bid. Affiant further states that the bidder has not been a party to any collusion among bidders in restraint of freedom of competition by agreement to bid at a fixed price or to refrain from bidding; or with any county official or employee as to quantity, quality or price in the prospective contract, or any other terms of said prospective contract; or in any discussions between bidders and any county official concerning exchange of money or other thing of value for special consideration in the letting of contract.

Bidder:

_____

Name:

_____

Address:

_____

Phone Number:

_____

Signature

Subscribed and sworn to before me the _____ day of _____, 20____.

_____

Notary Public (or Clerk or Judge)

My commission expires:_____

Note:

Each competitive bid submitted to a county, school district or municipality must be accompanied with the above Affidavit as required by 61 Okla. St. Ann. 138